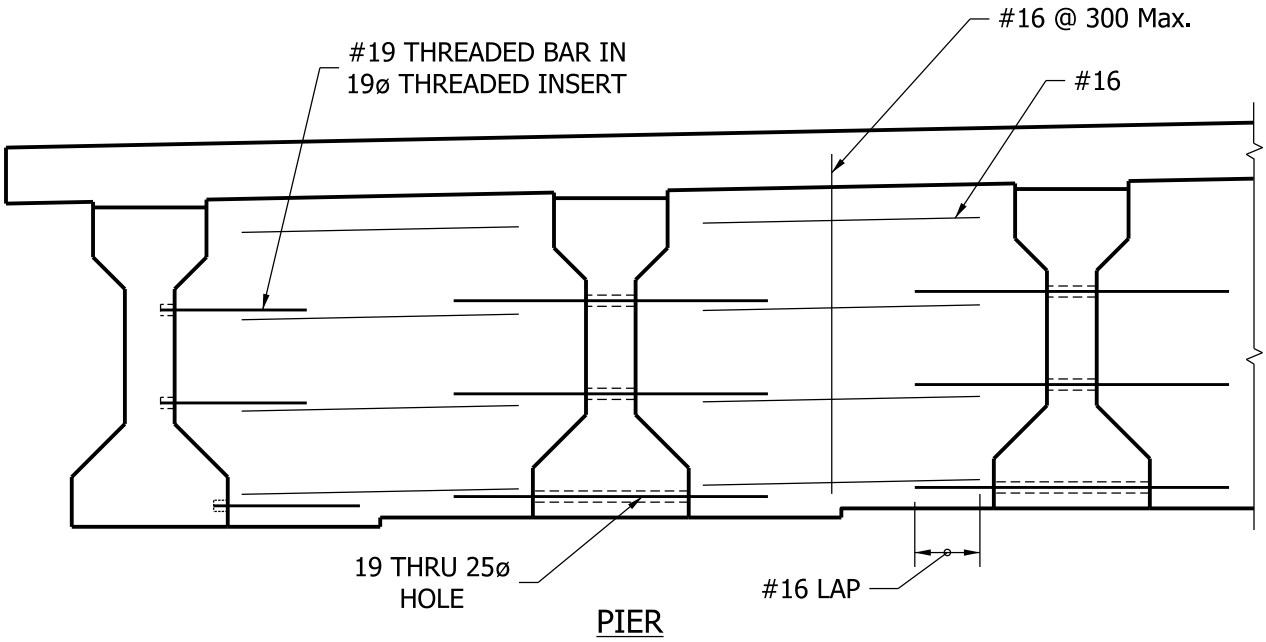

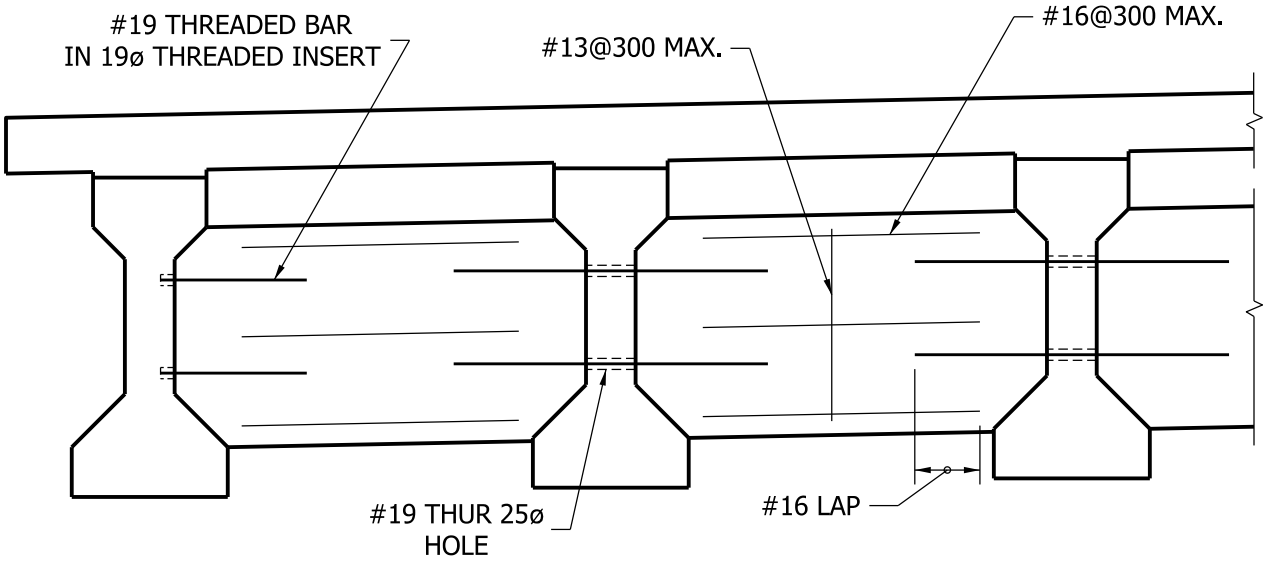

INTERMEDIATE

I-BEAM DIAPHRAGMS

Figure 63-16D