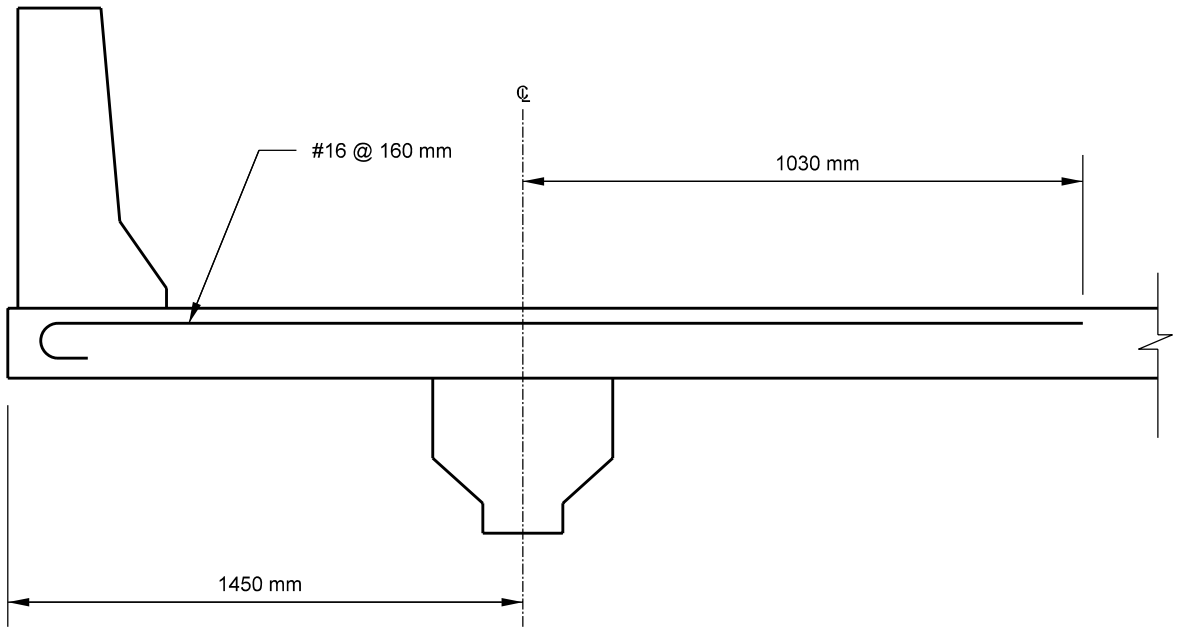

LENGTH OF ADDITIONAL BARS IN DECK OVERHANG

Figure 61-5G