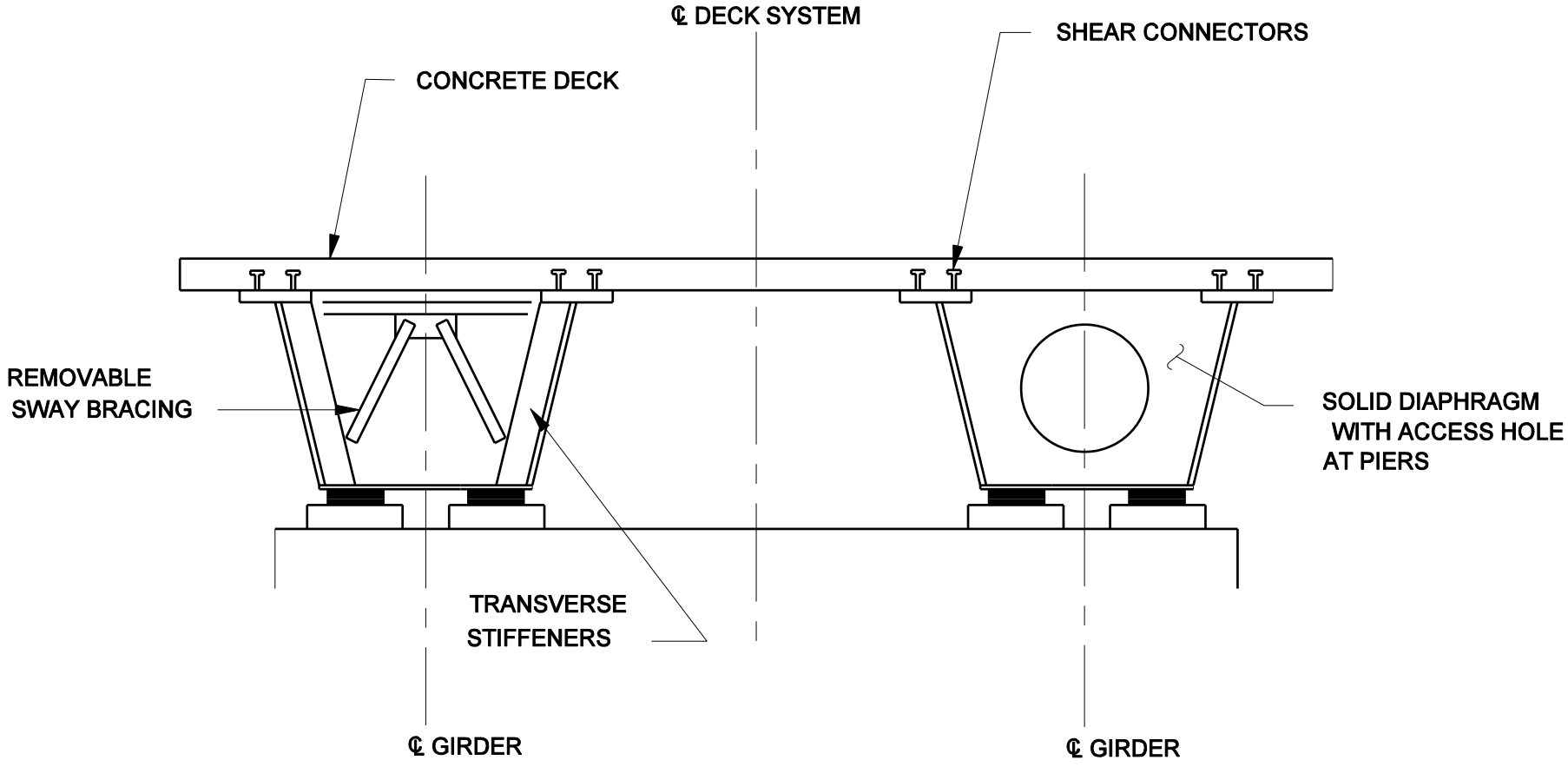

TYPICAL CROSS SECTION WITH COMPOSITE STEEL BOX GIRDERS
(Type K)

Figure 59-3U