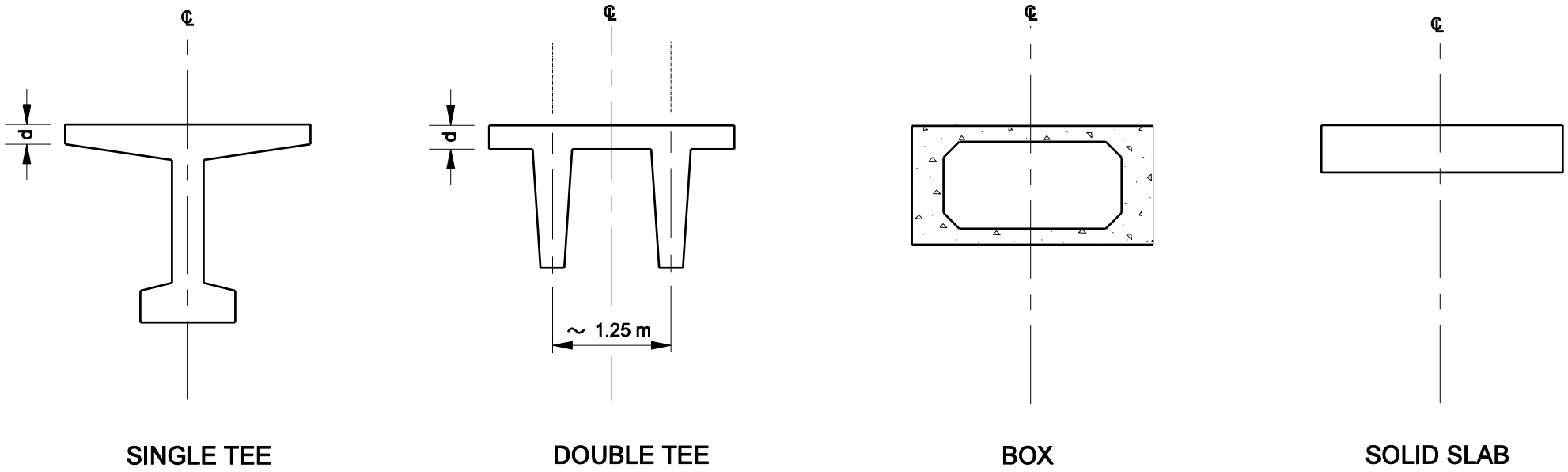

ALTERNATIVES FOR ASSEMBLY OF PRECAST CONCRETE ELEMENTS (Type G)

Figure 59-3P