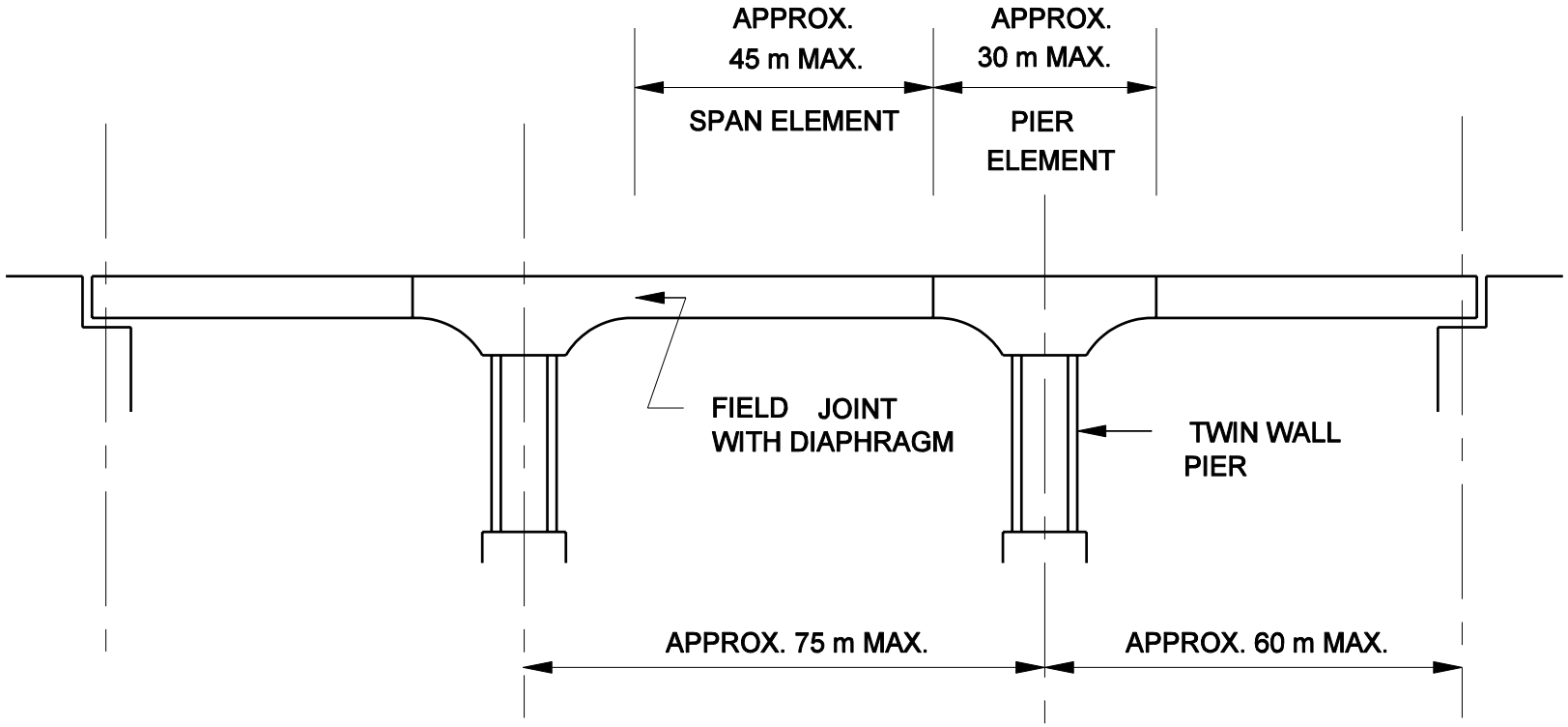

LARGE-SPAN BRIDGE (Type F)
(Constructed from Longitudinal Precast Beam Elements)

Figure 59-3O