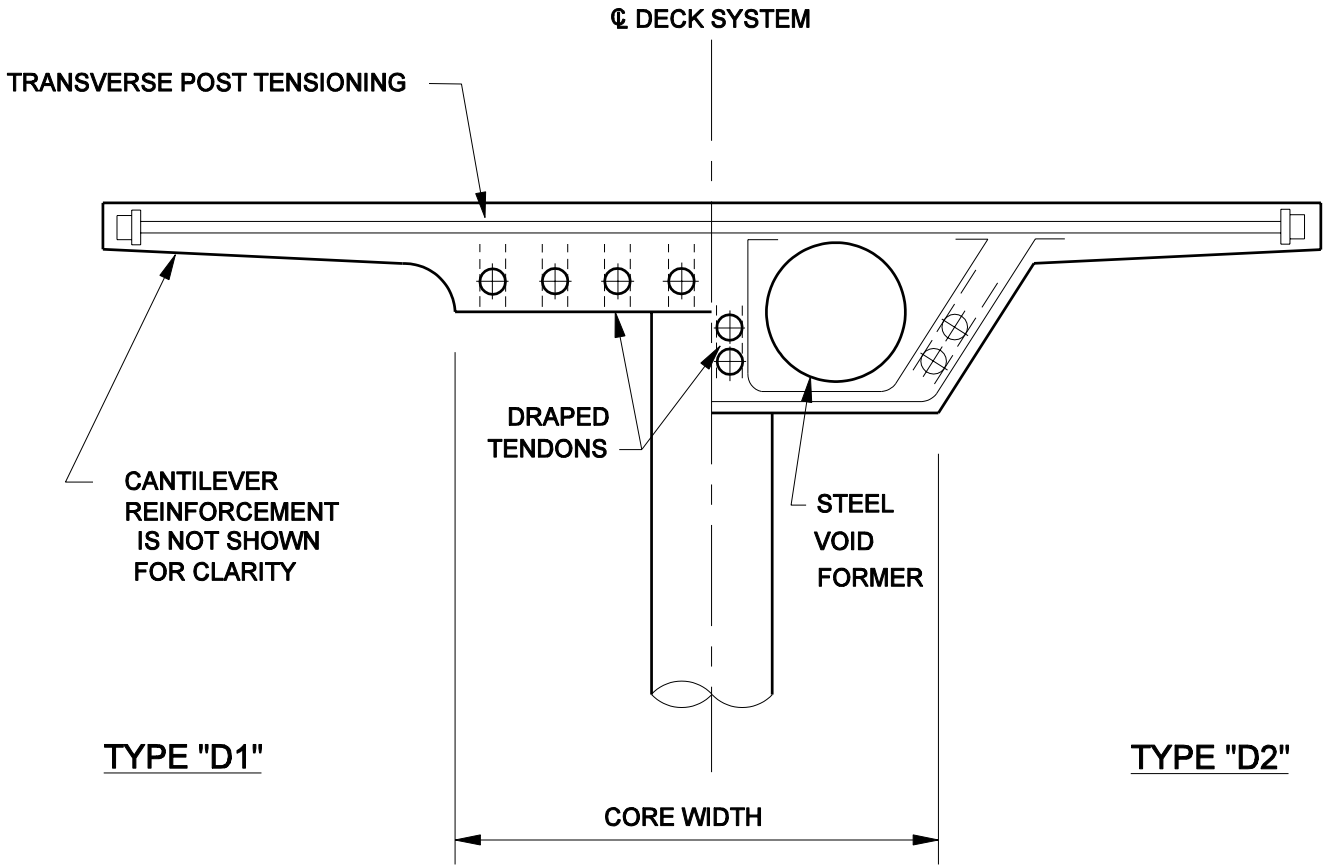

TWO-WAY POST-TENSIONED CAST-IN-PLACE CONCRETE SPINE-AM WITH CANTILEVER
(Type D)

Figure 59-3I