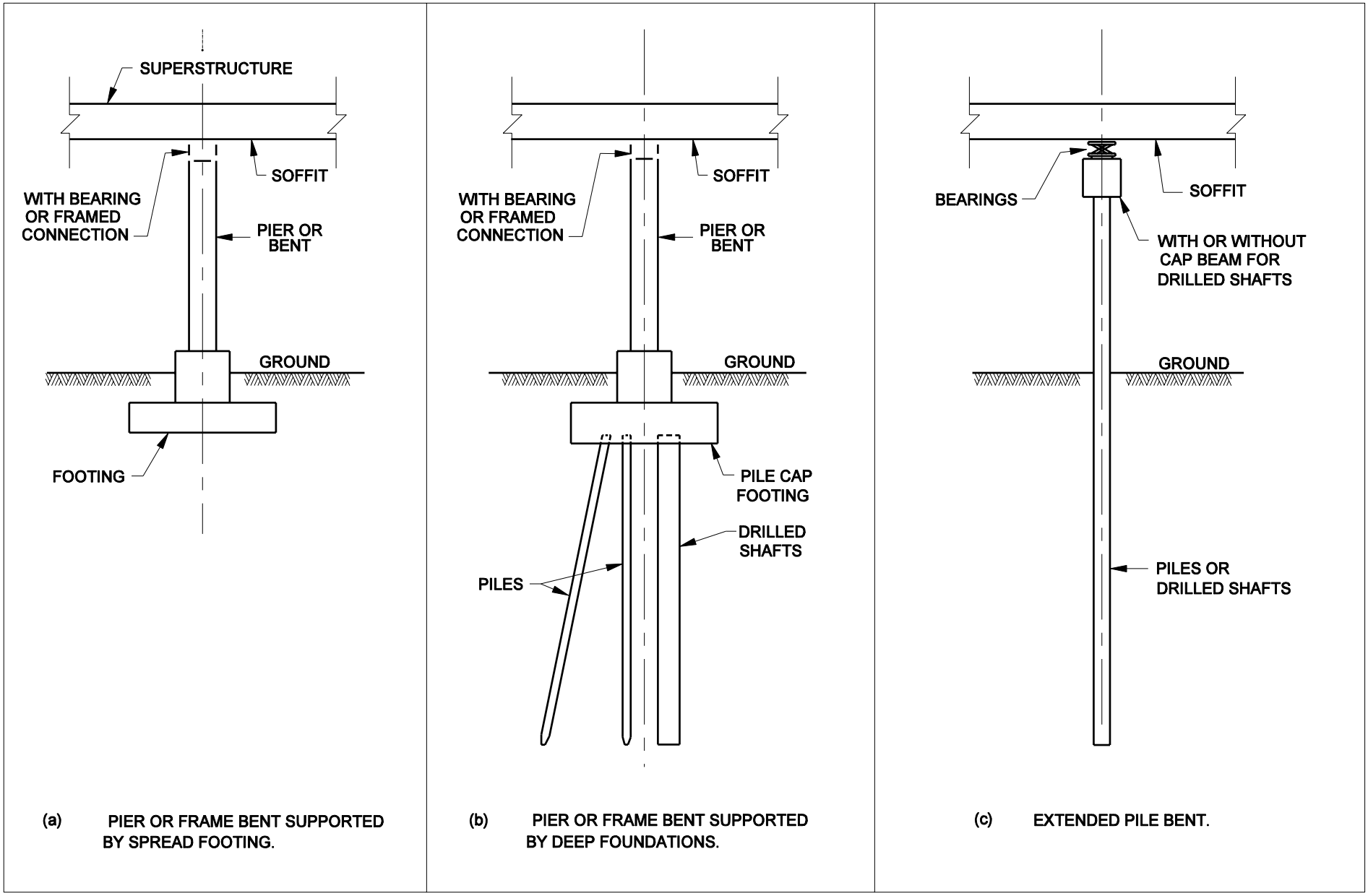

BASIC BENT TYPES

Figure 59-2A