TABLE OF CONTENTS

Table of Contents 1

List of Figures 4
59-1A Bridge Cross Section (Twin Structures, Four Lanes) 4
59-1B Bridge Cross Section (Twin Structures, Six or More Lanes) 4
59-1C Bridge Cross Section (Single Structure, Divided Highway) 4
59-1D Bridge Cross Section (Two-Lane, Two-Way Highway) 4
59-1E Bridge Clear Roadway Width (New Construction/Reconstruction/4R Project) 4
59-1F Bridge Clear Roadway Width (3R Project) 4
59-1G Bridge Railing Offsets (Guardrail Transition to Bridge Railing) 4
59-1H Superelevation Transition Diagrams for Bridges 4
59-1 I Bridge Width (Flat or Short Horizontal Curve) 4
59-1J Structure Length for Stream Crossing (Reinforced Concrete Slab Structure) 4
59-1K Structure Length for Highway Crossing (Beam Type Superstructure) 4
59-1L Bridge Underpass Cross Section (New Construction / 4R Project) 4
59-1M New Bridge Underpass Cross Section (3R Project) 4
59-1N Vertical Clearances 4
59-1 O End Bent Berms 4
59-2A Basic Bent Types 4
59-2B Use of Integral End Bents 4
59-2C Integral End Bents 4
59-2D Cantilever Abutment 4
59-2E Pier Stem and Column Configuration in Plan 4
59-2F Stem Types for Piers 4
59-2G Frame Bents 4
59-3A Superstructure Types 4
59-3B Span Lengths 4
59-3C Superstructure Characteristics 4
59-3D Haunch Configurations for Reinforced Concrete Slab Bridge 4
59-3E Typical Reinforced Concrete Slab Deck (Type A) 4
59-3F Typical Post-Tensioned Concrete Slab (Type B) 4
59-3G Alternatives for Transverse Post-Tensioning (Type B) 4
59-3H California-Type Box Girder (Type C) 4
59-3 I Two-Way Post-Tensioned Cast-in-Place Concrete Spine-Beam with Cantilevers (Type D) 4
59-3J Composite Deck with Prestressed, Precast Beams (Type E1) 4
59-3K Prestressed Concrete I-Beam Selection Chart 4
59-3L Composite Deck with Prestressed, Precast Box Beams (Type E2) 4
59-3M Indiana Bulb-Tee Beam (Type F) 4
59-3N Top Anchorage Alternative for Longitudinal Post-Tensioning (Type F) 4

59-3 O Large-Span Bridge (Type F) (Constructed from Longitudinal Precast Beam Elements) 5
59-3P Typical Precast Concrete Elements (Type G) 5
59-3Q Alternatives for Assembly of Precast Concrete Elements (Type G) 5
59-3R Typical Cross Section for Segmental Construction (Type H) 5
59-3S Typical Cross Section with Composite, Steel Rolled Beams (Type I) 5
59-3T Typical Cross Section with Composite, Steel Plate Girders (Type J) 5
59-3U Typical Cross Section with Composite Steel Box Girders (Type K) 5
59-3V Typical Cross Section for Laminated Wood Deck (Types L1 and L2) 5
59-3W Typical Cross Section with Wood Beams (Types L3 and L4) 5
59-5A Estimated Unit Prices for Structural Members 5

Chapter Fifty-nine 6

59-1.0 STRUCTURE SIZING 6
59-1.01 Geometric Design 6
59-1.01(01) Cross-Section Elements 7
59-1.01(02) Horizontal and Vertical Alignment 9
59-1.01(03) Structure Length 10
59-1.02 Geometric Design of Underpass 10
59-1.03 End Bents 12
59-1.04 Waterway Opening 12
59-1.05 Railroad Clearance 13

59-2.0 SUBSTRUCTURE AND FOUNDATION 13
59-2.01 Foundation 14
59-2.01(01) Pier or Frame Bent Supported by Spread Footing 14
59-2.01(02) Pier or Frame Bent Supported by Deep Foundation 15
59-2.01(03) Extended Pile Bent 15
59-2.02 End Bent or Abutment 16
59-2.02(01) Usage 16
59-2.02(02) Spill-Through End Bent 16
59-2.02(03) Integral End Bent 16
59-2.02(04) Abutment 18
59-2.03 Pier or Frame Bent 18
59-2.03(01) Pier 18
59-2.03(02) Frame Bent 19

59-3.0 SUPERSTRUCTURE 19
59-3.01 General 19
59-3.02 Superstructure Type 20
59-3.02(01) Type A: Reinforced Cast-in-Place Concrete Slab 20
59-3.02(02) Type B: Longitudinally Post-Tensioned, Cast-in-Place Concrete Slab 21

59-3.02(03) Type C: Longitudinally Post-Tensioned, Cast-in-Place Concrete Box Girders....22
59-3.02(04) Type D: Two-Way Post-Tensioned, Cast-in-Place Concrete Spine-Beam with Cantilevers....22
59-3.02(05) Type E: Prestressed, Precast Concrete Beams....23
59-3.02(06) Type F: Bulb-Tee Beams Made Continuous by Post-Tensioning....24
59-3.02(07) Type G: Deck System with Prestressed, Precast Longitudinal Elements....25
59-3.02(08) Type H: Segmental Concrete Box....27
59-3.02(09) Type I: Composite Steel Rolled Beam....27
59-3.02(10) Type J: Composite Steel Plate Girder....28
59-3.02(11) Type K: Composite Open Steel Box Girder....28
59-3.02(12) Type L: Wood Superstructure....29
59-3.02(13) Type M: Structure Under Fill....30

59-4.0 EVALUATION FACTORS....31
59-4.01 Foundation Considerations....31
59-4.01(01) Scour....31
59-4.01(02) Jacking Capabilities....31
59-4.02 Aesthetics....31
59-4.03 Construction and Falsework....34
59-4.04 Maintainability....34
59-4.05 Adaptability to Future Widening....35
59-4.06 Cost....35
59-4.07 Environment....36
59-4.08 Railroad....36
59-4.09 Utilities....36

59-5.0 STRUCTURE-TYPE STUDIES....36
59-5.01 General....36
59-5.02 Quantity Estimating....37
59-5.03 Alternative Superstructure Design Process....38

LIST OF FIGURES

Figure Title

59-1A Bridge Cross Section (Twin Structures, Four Lanes)
59-1B Bridge Cross Section (Twin Structures, Six or More Lanes)
59-1C Bridge Cross Section (Single Structure, Divided Highway)
59-1D Bridge Cross Section (Two-Lane, Two-Way Highway)
59-1E Bridge Clear Roadway Width (New Construction/Reconstruction/4R Project)
59-1F Bridge Clear Roadway Width (3R Project)
59-1G Bridge Railing Offsets (Guardrail Transition to Bridge Railing)
59-1H Superelevation Transition Diagrams for Bridges
59-1 I Bridge Width (Flat or Short Horizontal Curve)
59-1J Structure Length for Stream Crossing (Reinforced Concrete Slab Structure)
59-1K Structure Length for Highway Crossing (Beam Type Superstructure)
59-1L Bridge Underpass Cross Section (New Construction / 4R Project)
59-1M New Bridge Underpass Cross Section (3R Project)
59-1N Vertical Clearances
59-1 O End Bent Berms
59-2A Basic Bent Types
59-2B Use of Integral End Bents
59-2C Integral End Bents
59-2D Cantilever Abutment
59-2E Pier Stem and Column Configuration in Plan
59-2F Stem Types for Piers
59-2G Frame Bents
59-3A Superstructure Types
59-3B Span Lengths
59-3C Superstructure Characteristics
59-3D Haunch Configurations for Reinforced Concrete Slab Bridge
59-3E Typical Reinforced Concrete Slab Deck (Type A)
59-3F Typical Post-Tensioned Concrete Slab (Type B)
59-3G Alternatives for Transverse Post-Tensioning (Type B)
59-3H California-Type Box Girder (Type C)
59-3 I Two-Way Post-Tensioned Cast-in-Place Concrete Spine-Beam with Cantilevers (Type D)
59-3J Composite Deck with Prestressed, Precast Beams (Type E1)
59-3K Prestressed Concrete I-Beam Selection Chart
59-3L Composite Deck with Prestressed, Precast Box Beams (Type E2)
59-3M Indiana Bulb-Tee Beam (Type F)
59-3N Top Anchorage Alternative for Longitudinal Post-Tensioning (Type F)

59-3 O Large-Span Bridge (Type F) (Constructed from Longitudinal Precast Beam Elements)
59-3P Typical Precast Concrete Elements (Type G)
59-3Q Alternatives for Assembly of Precast Concrete Elements (Type G)
59-3R Typical Cross Section for Segmental Construction (Type H)
59-3S Typical Cross Section with Composite, Steel Rolled Beams (Type I)
59-3T Typical Cross Section with Composite, Steel Plate Girders (Type J)
59-3U Typical Cross Section with Composite Steel Box Girders (Type K)
59-3V Typical Cross Section for Laminated Wood Deck (Types L1 and L2)
59-3W Typical Cross Section with Wood Beams (Types L3 and L4)
59-5A Estimated Unit Prices for Structural Members

CHAPTER FIFTY-NINE

STRUCTURE TYPE AND SIZE

The basic objective of this Chapter is to select the most appropriate structure type and configuration for the given site conditions. This selection is a critical event in project development. The decision will significantly impact the detailed structure design phase, construction costs, and maintenance costs over the life of the structure. Through advance layout and approximate dimensional proportioning based on theory, practice, and judgment, the designer may establish likely structural dimensions which will permit analysis and design of the structure.

References shown following section titles are to the AASHTO *LRFD Bridge Design Specifications*.

59-1.0 STRUCTURE SIZING

The sizing of a structure requires the evaluation of other factors in addition to structural considerations. These include bridge and underpass geometrics, abutment dimensioning, and waterway opening. Together, they will determine the overall size of the structure for analysis and design. Each structure of longer than 6.1 m in total span length is considered a bridge and must have a structure file number and a separate Des. number. This applies to each three-sided structure, oversize box culvert, set of multiple box culverts, or set of multiple pipe structures. A large culvert having an opening width of 6.1 m or less may also qualify as a bridge if the skew results in the span's measurement along the centerline of the roadway to be greater than 6.1 m. If the span length for either the flat-top or arch alternative for a three-sided structure is longer than 6.1 m as described above, it should be regarded as a bridge.

59-1.01 Geometric Design

Part V provides criteria for roadway geometrics. The road-design criteria will determine the proper geometric design of the roadway, and the bridge design will accommodate the roadway design across each structure within the project limits. This will provide full continuity of the roadway section for the entire project. This process will, of course, require proper communication between the road designer and bridge designer to identify and resolve any problems. See Chapter Two for a flowchart of the bridge-design process.

The bridge geometrics will be determined in the project scope of work. For a new or reconstructed bridge on a 4R project, the criteria provided in the applicable chapters of Part V will determine the geometric design of the bridge. For a bridge within the limits of a 3R project, the criteria provided in Chapter Fifty-five will determine the bridge geometrics. Section 40-6.0 provides project scope of work definitions and a map of the State highway system with designated 3R and 4R routes.

The following summarizes the geometric criteria specifically for a bridge. See Part V for more information.

59-1.01(01) Cross-Section Elements

Figures 59-1A, 59-1B, 59-1C, and 59-1D each provide schematics of the bridge cross section for a specific highway type. The following will apply to the bridge cross section.

1. Clear-Roadway Width. Figure 59-1E provides criteria for a new or reconstructed bridge within the limits of a 4R project. Figure 59-1F provides criteria for a bridge within the limits of a 3R project.

2. Auxiliary Lane. This may be required across a structure for a variety of reasons. To determine the additional width needed for an auxiliary lane, see the following:

    a. Chapter Forty-eight discusses the warrants for and design of an auxiliary lane within an interchange. This may be needed across a bridge, for example, to accommodate vehicular weaving within a full cloverleaf interchange.

    b. Chapter Forty-six discusses warrants for and design of an auxiliary lane at an intersection, including two-way, left-turn lane, turning roadway, or exclusive turn lane. This may impact the design width of a structure near an intersection.

    c. Section 44-2.0 discusses the warrants for and design of a truck-climbing lane. The full width of this lane including shoulder should be provided across each structure.

    d. Chapters Fifty-three, Fifty-four, and Fifty-five provide the width of an auxiliary lane for various project scopes of work (e.g., 3R, 4R) and facility type (e.g., arterial).

3. Cross Slope. Each new or reconstructed bridge on a tangent section will be constructed with a cross slope of 2% sloping away from the crown. The 2% applies to the entire width from the crown to the face of railing or curb. The crown across the bridge will

typically be in the same location as the approaching roadway crown. An existing bridge to remain in place may retain an existing cross slope of 1.5%.

On a superelevated roadway section, a break may be provided between the traveled way and high-side shoulder. However, a constant cross slope should always be provided across the entire curb-to-curb or railing-to-railing width of a superelevated bridge. If the bridge is within the normal superelevation-transition length where the pavement slope varies on either side of the profile grade, the superelevation-transition diagram should be modified to provide a constant cross slope (see Figure 59-1H).

The approach roadway will include a shoulder with a cross slope different from that on the bridge. For example, the typical roadway shoulder cross slope on tangent is 4%. It will be necessary to transition the roadway shoulder slope to the bridge deck slope in the field. No plan details are required for this transition.

4. Median. Section 45-2.0 discusses the design of a median. For a long bridge with a sufficiently narrow median, some increased safety benefits may be realized by constructing a single structure. Depending on site conditions, a single structure should be used rather than twin structures where the median width is approximately 10 m or less on a freeway, or 6 m or less elsewhere. The median width at an overpass should match the median width on the approach.

5. Sidewalk. Section 45-1.06 provides the guidelines for sidewalk warrants. The following summarizes the criteria for a bridge.

   a. Where a sidewalk currently exists on a bridge which will be replaced or reconstructed, the sidewalk should be replaced if the roadway approach has a sidewalk or is a candidate for a sidewalk.

   b. An existing bridge may have a sidewalk only on one side, and it may be warranted to provide a sidewalk on each side as part of the bridge replacement or reconstruction project. See Section 45-1.06.

   c. If no sidewalk is on an existing bridge but it is present on the approaching roadway, a sidewalk should be provided on the new or reconstructed bridge.

   d. A bridge replacement or reconstruction may be the project scope of work, i.e., no roadway work will be performed except for minor roadway approach work. If no sidewalk currently exists on the roadway, the decision to place a sidewalk on the bridge will be based on whether the roadway is a candidate for a future sidewalk. See Section 45-1.06.

For details of a sidewalk on a bridge, see Section 61-6.05.

6. Longitudinal Side Slope Transition. See Section 49-3.05(03).

7. Bridge Width for Traffic Maintenance. Figures 59-1E and 59-1F provide criteria for the bridge width. Additional permanent bridge width may be provided solely for the purpose of placing one lane of traffic across the bridge during construction. This could eliminate the need for a detour or runaround or the use of a local road to re-route traffic during construction. See Part VIII for more information on maintenance and protection of traffic during construction.

8. Bridge Width on Flat or Short Horizontal Curve. Railings and copings on a bridge within a horizontal curve are built concentric with the roadway centerline. However, where the bridge is on a very flat curve, or if the bridge is short, it may be more practical to build the railing and coping parallel to the long chord if the following criteria are met.

   a. the curved roadway plus shoulders and barrier offsets is within the inner faces of the railings; and

   b. the bridge-deck width is increased by not more than 0.3 m.

   Figure 59-1 I illustrates these criteria.

9. Ramp. For a bridge on an interchange ramp, the full paved approach width of the ramp plus barrier railing offsets should be provided across the bridge. See Section 48-5.0 for criteria on ramp width.

59-1.01(02) Horizontal and Vertical Alignment

The horizontal and vertical alignment will be determined for the overall roadway within the project limits, and the bridge will be designed consistent with the roadway alignment. Chapters Forty-three and Forty-four provide geometric design criteria for alignment for new construction and 4R work. Chapter Fifty-five provides alignment criteria for a bridge within the limits of a 3R project. The following are the ideal horizontal and vertical alignment objectives.

1. A nearly right-angle crossing is preferable to an extreme skew.

2. A minimum longitudinal grade of 0.5% on the bridge is desirable. A flatter grade will be tolerated where it is not physically or economically desirable to meet the above criterion.

3. The minimum vertical clearance must be provided. For economy, do not exceed the minimum vertical clearance by more than 0.15 m.

As discussed in Section 59-3.0, horizontal curvature and skew will somewhat limit the selection of the superstructure type, and to some extent, will complicate detailed bridge design and construction. However, restrictions on bridge design and construction are considered subordinate to the objective of providing a proper roadway alignment for vehicular traffic.

59-1.01(03) Structure Length

Among other factors, structure length is determined by considering vertical elevations and horizontal dimensions at the high coping. This is especially applicable to a superelevated bridge. The following figures provide criteria for determining structure length.

1. Stream Crossing. See Figure 59-1J for a reinforced-concrete slab structure.
2. Highway Crossing. See Figure 59-1K for a beam-type superstructure.

To determine the approximate locations of end bents and to compute El. A and El. B, use the following procedure with Figure 59-1J.

1. Compute waterway area required. W = [W + 2(El. D – El. C)](El. D – El. C). Solve for W.
2. ℄ Sta Bent 1 = ℄ Channel Sta – $\left(\frac{W}{2} + E + B + A\right) / \cos\theta$.
3. ℄ Sta Bent 2 = ℄ Channel Sta + $\left(\frac{W}{2} + F + B + A\right) / \cos\theta$.
4. Compare computed ℄ Bent Stations to the first approximate stations and, if significantly different, adjust ℄ Bent Stations and revise El. A and El. B.
5. Structure Length (⊥ to channel): L = 2A + 2B + E + W + F.
6. Structure Length (along ℄ roadway) = L /cos θ.

59-1.02 Geometric Design of Underpass

The geometrics of an underpass have a significant impact on the size of the overpassing structure. Figures 59-1L and 59-1M provide schematics of a bridge underpass. The underpass will be designed to meet the geometric design criteria described in Part V and as discussed in Section 59-1.01. The following summarizes the geometric design of a bridge underpass.

1. Roadway Section. The full-approach-roadway section, including the median width, should be provided through the underpass section.

2. Clear Zone. The roadside clear-zone width applicable to the approaching roadway section will be provided through the underpass. Section 49-2.0 provides the clear-zone criteria, which are a function of design speed, traffic volume, highway alignment, and side slope. If an auxiliary lane is provided through the underpass, this impacts the clear-zone-width determination. Section 49-2.0 specifically discusses the determination of clear-zone width where an auxiliary lane is present.

3. Roadside Safety. Chapter Forty-nine provides other roadside-safety criteria which may impact bridge design. Sections 49-6.0 and 49-7.0 specifically apply.

4. Collision Wall. A collision wall to protect the bridge substructure from vehicular impact may be warranted through the underpass. The AASHTO *LRFD Bridge Design Specifications* discusses both the warrants and design of a collision wall.

5. Sidewalk. Section 59-1.01(01) provides the guidelines for sidewalk warrants.

6. Side Slopes. Section 59-1.01(01) discusses the rate of transition for modifying the rate of fill or cut slopes near a bridge or underpasses.

7. Future Expansion. In determining the cross section width of a highway underpass, the designer should also consider the likelihood of future roadway widening. Widening an existing underpass in the future can be extremely expensive, so it may be warranted, if some flexibility is available, to allow for possible future roadway expansion. Therefore, the designer should evaluate the potential for further development in the vicinity of the underpass which would significantly increase traffic volume. If appropriate, a reasonable allowance for future widening may be to provide sufficient lateral clearance for one additional lane in each direction.

8. Vertical Clearance. Figure 59-1N provides the vertical-clearance requirements. This clearance must be provided for the elevation and alignment of the overpassing structure. The vertical clearance is determined at the low steel or concrete elevation of the structure. Figures 59-1L and 59-1M illustrate where the clearance is measured. Clearance must be maintained across both the traveled way and the shoulders.

   See Chapters Fifty-three, Fifty-four, and Fifty-five for criteria on vertical clearance for an existing bridge to remain in place.

9. Ramp. For an underpass on an interchange ramp, the full paved approach width of the ramp should be provided through the underpass. The clear-zone width should also be provided through the underpass. See Section 48-5.0 for criteria on ramp width.

59-1.03 End Bents

End bent configuration and dimensioning has a significant impact on the needed size of the structure. The following will apply.

1. Berm. Figure 59-1 O provides criteria for dimensioning the berm at the top of the spillslope beneath the bridge. The berm elevation at the low side should be at least 0.15 m below the end-bent bearing seat or, as illustrated for a slab bridge, below the bottom of the slab. The berm elevation at the high side should be not more than 0.5 m below these points before considering sloping the berm. The minimum berm width is 0.9 m.

2. Spillslope. The spillslope is 2:1, except for a structure located within the backwaters of the Ohio River, where the spillslope is 3:1.

3. Wingwalls. For a reinforced-concrete slab structure which is in accordance with the slab-to-berm criteria shown in Figure 59-1 O, wingwalls will not be required at an end bent. Wingwalls may be required for a slab structure where the 0.5-m clearance between the berm and slab is exceeded. Wingwalls will always be required for a beam-type structure.

59-1.04 Waterway Opening

Chapter Thirty-two provides criteria for the hydraulic design of a bridge waterway opening. This will have a significant impact on the size and elevation of the structure. Chapter Thirty-two discusses hydraulic policies on maximum backwater, freeboard, bridge sizing policy, maximum velocity, hydraulic scour, and the use of analysis methodologies (e.g., WSPRO, HEC-2). The following summarizes some of the structural considerations relative to waterway opening.

1. Substructure Displacement. In the required waterway opening provided by the Production Management Division's Hydraulics Team, an allowance has already been made for the area displaced by the substructure. Therefore, the area of piers and bents below the Q_{100} elevation should not be deducted from the gross waterway area provided. The Hydraulics Team should be contacted if significantly thicker substructure units (e.g., drilled shafts) or if more substructure units are proposed than anticipated by the Hydraulics Team so that adjustments can be made to the required waterway-opening value.

2. Existing Substructure Elements. Removing existing pier or abutment footings can be a major expense. Therefore, where practical at a stream crossing, the designer should adjust span lengths or shift the entire structure so that new foundations or piles for a slab bridge will avoid existing substructure elements.

3. Interior Supports. For a major waterway crossing, and if the foundation conditions allow, a single round, hammerhead-type pier supported by a deep foundation is preferred. Multiple round columns may be used, but they may require a solid wall between columns to avoid the collection of debris. A single-wall pier aligned parallel to the flood flow direction may be a more suitable alternative.

   For a meandering river or stream, the most desirable pier type is normally a single, circular pier column.

4. Freeboard. Where practical, a minimum clearance of 600 mm should be provided between the design water-surface elevation and the low-structure elevation to allow for passage of ice and debris. Where this is not practical, the clearance should be established by the designer based on the type of stream and level of protection desired. For example, 300 mm should be adequate for a small stream that normally does not transport drift. An urban bridge with grade limitations may not provide any freeboard. A 1000-mm freeboard is desirable for a major river which is known to carry large ice floes or debris.

5. Low Channel-Clearing Elevation. The low channel-clearing elevation should be set as described in Section 32-3.02(08).

6. Span Lengths. The minimum span length for a bridge with more than 3 spans should be 30 m for those spans over the main channel. A three-span bridge should have the center span length maximized at a site where debris may be a problem. A two-span bridge should be avoided at a stream crossing where the pier must be located in the center of the main channel. Contact the Hydraulics Team if a two-span structure is necessary.

59-1.05 Railroad Clearance

See Chapter Sixty-nine for criteria on clearance for railroad applications.

59-2.0 SUBSTRUCTURE AND FOUNDATION

This Section discusses several types of substructure and foundation systems used, and it provides their general characteristics. The designer should consider this information with the intent to select the combination of substructure and foundation which is suitable at the site to economically satisfy the geometric requirements of the bridge and to safely use the strength of the soil or rock present at the site.

The demarcation line between substructure and foundation is not always clear, especially for extended piles and drilled shafts. The foundation includes the supporting rock or soil and parts of the substructure which are in direct contact with, and transmit loads to, the supporting rock or soil. This definition will be used to the greatest extent possible.

A similar difficulty exists in separating substructure and superstructure where these parts are integrated. Arbitrarily, this Chapter will refer to each component or element located above the soffit line as part of the superstructure.

Chapters Sixty-six and Sixty-seven discuss the detailed design of substructure elements and foundations.

59-2.01 Foundation

The majority of currently-used systems can be categorized into three basic groups as illustrated in Figure 59-2A. These groups are discussed below.

For interior supports at a stream crossing, either extended piles or piles with a pile cap footing are used. Where scour is not expected and quality load-bearing soil is close to the surface, the use of spread footings may be considered, provided that the geometric limitation as discussed in Section 59-2.01(01) is satisfied.

59-2.01(01) Pier or Frame Bent Supported by Spread Footing

The *LRFD Bridge Design Specifications* provides no dimensional restrictions for substructure settlement for a spread footing. Unlimited settlement, however, may cause problems as follows.

1. The superstructure may intrude into the required vertical clearance. This can be prevented by increasing the as-built clearance in excess of the specified settlement value. Such intrusion can also be corrected by periodic jacking of the superstructure.

2. Rideability may be impaired by introducing angular rotations in the longitudinal profile of the roadway due to differential settlement among the individual substructure portions. The substructure design should limit such angular rotations to 0.005 rad. This value should be applied to the cumulative rotations between two adjacent spans. Differential settlement should be determined by assuming alternating maximum and minimum values of the calculated settlement range between adjacent supports. Because settlement is a deciding factor, this calculation should be made during the structure type and size determination. The stated limit of 0.005 rad in relative rotation should be applied to

either a simply supported or continuous superstructure. For a fixed value of permissible rotation, the larger the span, the larger the settlement that can be accommodated.

3. In a continuous superstructure, differential settlement results in force effects which are in addition to those due to gravity loads. The *LRFD Specifications* incorporates both force and geometric effects of settlement in a number of load combinations which are mandated for investigation, and it does not prohibit the inelastic redistribution of the resulting force effects.

   The larger the span and the lesser its rigidity, the smaller are the force effects due to settlement. Where settlement causes negative moments in the superstructure, the problems that may arise are related to cracking and ductility, rather than to strength.

   The *LRFD Specifications* also emphasizes the danger of scour for a pier located in a waterway. *LRFD Specifications*, Section 2 lists methods of minimizing this catastrophic potential, due to the large number of bridges that wash away each year.

   A spread footing requires a quality foundation material close to the ground surface. The bottom of a spread footing on soil should be below the deepest frost level. See Section 66-2.03 for more information.

59-2.01(02) Pier or Frame Bent Supported by Deep Foundation

Where conditions are not present which favor or permit the application of a spread footing, a deep foundation, such as drilled shafts or piles, should be considered. Prefabricated piles made of concrete, steel, or a combination of these materials, are driven into position by hammers. Drilled shafts and drilled concrete piles are constructed essentially with the same technique requiring specific skills. Drilled shafts, especially those with bell-shaped bottoms, can carry extremely large loads.

The *LRFD Specifications* provides a two-level approach for the design of a deep foundation, in which the structural resistance of the pile or shaft and the structural resistance of the supporting soil or rock are investigated separately.

59-2.01(03) Extended Pile Bent

Under certain conditions, the economy of a substructure can be enhanced by extending the deep foundation above ground level to the soffit of the superstructure. These conditions exclude the presence of large horizontal forces which may develop due to seismic activity, collision by vessels or vehicles, ice, or stream flow intensified by accumulated debris. Longitudinal braking

forces, which are substantially increased in the *LRFD Specifications*, should preferably be resisted at the abutment.

The extended piles require a cap-beam for structural soundness. This cap-beam may be an integral part of the superstructure. An extended drilled shaft placed directly beneath each beam line can eliminate the use of a cap-beam. Sufficient space should be provided at the top of the shaft to allow for future jacking operations.

59-2.02 End Bent or Abutment

59-2.02(01) Usage

The types of end supports and their usage are as follows:

1. Integral End Bent. These, a subset of spill-through end bents, should be used for a structure which is in accordance with the geometric limitations provided in Figure 59-2B.

2. Non-Integral End Bents. These should be used where spill-through end bents are desirable, but integral end bents are not appropriate.

3. Abutments and Wingwalls. For soil conditions or bridge geometric dimensions not suitable for spill-through end bents, abutments and wingwalls of the cantilever type, or a mechanically-stablized-earth wall or other type of earth-retaining system should be used.

The following provide basic information on these end supports. See Chapter Sixty-seven for more-detailed information.

59-2.02(02) Spill-Through End Bent

A spill-through end bent, either integral or non-integral, by its nature is supported by an individual deep foundation, which the fill flows through. The end bent consists of a cap-beam and a mudwall (non-integral only) which provides partial retaining for the fill at its top. With this type of end bent, the fill is largely self-supporting. Therefore, for the same fill slope, it needs more space in plan geometry and results in longer spans. However, the additional superstructure cost is often less than the cost of a massive cantilever abutment.

59-2.02(03) Integral End Bent

The integral end bent eliminates the deck joint between the superstructure and the end bent by the structural integration of the two. See Figure 59-2C. The vertical dimension of the cap beam can be minimized as the mudwall becomes a composite part thereof.

Components of the deep foundation should be sufficiently flexible to accommodate the longitudinal movement of the pile bent. Such flexibility can be provided by steel H-piles, steel-encased concrete piles, or slender prestressed-concrete piles.

The reinforced-concrete bridge approach should be attached to the end bent. Provisions should be made to accommodate the longitudinal bridge movements at the outer end of the reinforced concrete bridge approach by using a 0.6-m wide terminal joint or pavement relief joint if a portion of the adjacent pavement section is concrete. No such joint is required if the entire adjacent pavement section is asphalt or gravel.

The *LRFD Specifications* encourages the designer to minimize the number of deck joints, and this end bent type meets that requirement. If the superstructure is fully continuous, no deck joints remain.

Because of the difference in construction costs between an integral end bent and an abutment, and the generally less-than-desirable performance of bridge-deck joints, an integral end bent should be used. See Chapter Sixty-seven. Limitations of continuous superstructure length are related to the flexural stresses caused in the piles by the expansion and contraction of the deck due to temperature, creep, and shrinkage.

If the maximum distance from the zero point to the integral end bent does not exceed the criteria shown in Figure 59-2B, the effects of deck expansion and contraction may be neglected in the analysis of the bridge, and the piles are designed only for axial loads to satisfy specified stress limits. If the continuous deck length exceeds these limits, or if the designer wishes to obtain a better understanding of the behavior of the end bent, an in-plane frame analysis should be performed and the components designed as specified in the *LRFD Specificati*ons.

To minimize deformation-induced force effects, only one row of vertical piles is permitted in an end bent. If the resistance of the surrounding soils is larger than a specified value, the piles should be driven into predrilled holes, which will be filled later with uncrushed granular material. This latter measure may be used rather effectively as the stiffness of the pile, hence the stresses are inversely proportional to the third power of the free-pile length.

Unless approved by the Production Management Division director, temperature movement should not exceed 50 mm at either end of a bridge supported by integral end bents.

59-2.02(04) Abutment

A concrete abutment may be supported by either a spread footing or a deep foundation. It usually consists of a vertical stem which supports the superstructure by bearings with or without pedestals, or a mudwall which retains the embankment fill in the longitudinal direction of the bridge. It may support the end of the reinforced-concrete bridge approach. Wingwalls are usually needed to retain the fill in the transverse direction. Continuity of the riding surface between the abutment and the superstructure is provided by a deck joint.

For restricted geometry, a tall superstructure, or large relative longitudinal movement between the superstructure and the substructure, the abutment may be the only feasible alternative. It is, however, generally expensive to construct. For a small bridge, its cost could be out-of-proportion with respect to other components of the bridge. With large abutments, located close to the edge of roadway or waterway below, superstructure spans can be reduced. Large abutments, however, may result in poor aesthetics of the bridge, and may impair visibility at an overpass.

An abutment is strongly affected by the bridge geometry and site conditions. Therefore, it may be designed in an infinite variety of shapes and sizes. Figure 59-2D indicates the essential parts of a typical cantilever abutment of rectangular layout supported by a spread footing. If the wingwalls are excessively large, they may be directly supported by spread footings or footings with piles.

59-2.03 Pier or Frame Bent

The above-ground portion of a substructure can be categorized into two groups as illustrated in Figures 59-2E and 59-2F. These are discussed below. See Section 67-3.0 for more details on interior supports.

59-2.03(01) Pier

A pier is almost exclusively made of reinforced concrete. Where piers are directly exposed to public view, their appearance may be improved by measures as discussed in Section 59-4.02.

The round column shown in Figure 59-2E(a) is the most economical, because it is sturdy and easy to build. If a pier has a large diameter and it is not exposed to vehicular or vessel collision, the economy of a hollow interior should be investigated.

The single, narrow wall shown in Figure 59-2E(d) is most suitable if its structural height is relatively small and the superstructure is a concrete slab; if the superstructure is made of narrow,

longitudinally laid, precast concrete components; or if it includes closely spaced, longitudinal beams. For a greater structural height, a hammerhead pier, as shown in Figure 59-2F(b), either with rectangular or rounded stem, is more suitable.

The use of twin walls shown in Figure 59-2E(e) permits the segmental construction of a medium-span superstructure made from longitudinal precast concrete components without falsework. A larger pier located in a waterway susceptible to ice accumulation may be fitted with a sharp icebreaker nose as shown in Figure 59-2E(f). A medium- or large-span, single-box superstructure may be supported by aesthetically-pleasing flared piers, as illustrated in Figure 59-2F(c). In a debris-prone stream, the wall-type pier is preferred.

59-2.03(02) Frame Bent

A frame bent, as shown in Figure 59-2G, can be constructed from steel, concrete, or a combination of these materials. Steel is typically used only for a temporary structure because of problems associated with corrosion, the environmental impact of repainting, vulnerability to collision, and the difficulty in providing an appropriate pier head. Furthermore, steel is not the most competitive material for resisting force effects which are primarily compressive.

A concrete frame bent is favored to support steel or concrete structural members. The columns of the bent can be either circular or rectangular in cross section. The former is usually more economical. The columns should be directly supported by the slab portion of a spread footing or by the pile cap.

Figure 59-2G(a) illustrates the most common type of concrete bent consisting of vertical columns and a cap beam, used in an overpass structure. Figure 59-2G(b) depicts a tall concrete bent which may be used in a cable-stayed bridge. There is an infinite variety of methods to use concrete to provide an economical and visually attractive substructure.

59-3.0 SUPERSTRUCTURE

This Section discusses those factors which should be considered in the selection of the superstructure type.

59-3.01 General

The State's geography is relatively flat with predominately small waterways, therefore, the largest of the available bridge types is rarely appropriate. The bridge types provided in Figure 59-3A are those which are either traditional or which may have an application resulting from the introduction of the AASHTO *LRFD Specifications*.

The load-and-resistance-factor-based *LRFD Specifications* has rendered the design of a medium or large span bridge more economical. The differences, however, are not substantial, because the new, less-conservative load factors are balanced by an increase in vehicular live loads. One significant change is the introduction of the empirical design of a concrete deck slab.

The empirical slab design is based on the recognition that a monolithic concrete slab fails in punching shear and, therefore, needs very little flexural reinforcement. In turn, it has been found that the shear strength is primarily determined by the geometry of the slab. The specified minimum isotropic reinforcement, which is only a little more than the required temperature steel, is set by consideration for crack control, rather than for strength.

A minimum of four beam lines is required for a multi-beam application on a State route. Three beam lines may be used for a local-public-agency structure if the designer obtains the written approval of the LPA's appropriate elected officials. The minimum deck thickness is 200 mm (including a 15-mm sacrificial wearing surface).

The following provides guidance in selecting the bridge superstructure type that is most appropriate for the highway geometry, span lengths, and site conditions.

1. Span Lengths. Figure 59-3B indicates the typical ranges of span lengths for which each superstructure type will apply.

2. Superstructure Depth. See *LFRD* Table 2.5.2.6.3-1 for traditional minimum depth for constant-depth superstructure for each structure type.

3. Superstructure Characteristics: Figure 59-3C tabulates basic characteristics of the superstructure types in shown in Figure 59-3A.

59-3.02 Superstructure Type

59-3.02(01) Type A: Reinforced Cast-in-Place Concrete Slab

The reinforced cast-in-place concrete slab is frequently used because of its suitability for short spans and its insensitivity to skewed or curved alignments. It is perhaps the simplest among all superstructure systems, as it is easy to construct. Structural continuity can be achieved without difficulty.

Haunching is used to decrease maximum positive moments in a continuous structure by attracting increased negative moments to the haunches and to provide adequate resistance at the haunches for the increased negative moments. It is a simple, effective, and economical way to

maximize the resistance of a thin concrete slab. As illustrated in Figure 59-3D, there are three ways of forming the haunch. The parabolic shape (a) is the most natural in terms of stress flow, and certainly the most aesthetic, and is preferred where the elevation is frequently in view. The parabolic haunch, however, is not the easiest to form and, as alternatives, the straight haunch (b) and the drop panel (c) should be considered where appropriate. The narrow pile cap (d), used in conjunction with an extended-pile substructure, does not qualify as an effective haunch.

Figure 59-3E depicts the elevation of a three-span, continuous-haunched slab bridge. The preferable ratio between interior span and end spans is approximately 1.25 to 1.33 for economy, but the system permits considerable freedom in selecting span ratio. The ratio between the depths at the centerline of interior piers and at the point of maximum positive moment should be between 2.0 and 2.5. Except for aesthetics, the length of the haunch need not exceed the kL values indicated in Figure 59-3D, where L is the end span length. Longer haunches may be unnecessarily expensive or structurally counterproductive.

59-3.02(02) Type B: Longitudinally Post-Tensioned, Cast-in-Place Concrete Slab

The basic distinction between the type A and type B superstructures is the difference in how they are reinforced. Therefore, most of the information described above for type A is applicable.

An extremely shallow slab is possible if the sections are over-reinforced. *LRFD Specifications* Article 5.7.3.3.1 allows the use of over-reinforced sections in prestressed-concrete members, if adequate ductility is proven by analysis or physical testing. Detailed structural analysis shows that if the haunch ratio is about 2.5, the ratio between maximum negative and positive moments is also approximately 2.5. This indicates that the amount of post-tensioning steel, as determined for positive moment, will be consistent with the requirements for negative moment, producing a balanced design. As an alternative, the right-hand side of the elevation in Figure 59-3F is drawn with a constant depth soffit. The latter structural arrangement never produces a balanced design, thus requiring additional negative reinforcement. This results in a considerable reduction in span range and increases the probability of spalling by providing a large amount of reinforcing steel close to the surface.

By increasing the span-to-depth ratio (maximum of 1:30 for simple spans and 1:40 for continuous spans), considerable savings may be obtained in both superstructure and substructure. The use of the potentially-extreme ratio should be made with consideration, as appropriate, for deflection performance and dynamic response.

There are two alternatives for transverse steel. One is with normal reinforcement, for which the requirements are the same as for a type A deck system. The second alternative is shown in Figure 59-3G which incorporates transverse post-tensioning. The cross section can be with or without cantilever overhangs. In the latter situation, two levels of post-tensioning instead of one

can be used. As illustrated in Figure 59-3F, transverse tendons should be fanned in the end zones of a skewed bridge. If the traffic barrier is attached to a cantilever overhang at isolated points (posts), both longitudinal and transverse reinforcement should be provided therein. The practical problem that often rises with the transverse post-tensioning on a deck of less than approximately 10 m width is the control of excessive seating losses, which makes the reinforced alternative preferable.

59-3.02(03) Type C: Longitudinally Post-Tensioned, Cast-in-Place Concrete Box Girders

This is a variation of type B, in which the deck system is considerably lighter and, therefore, more economical because of large, rectangular, and rhombic voids. This creates a multicell box-type superstructure, as illustrated in Figure 59-3H. This is often referred to as the California-type box girder. To facilitate the forming of a thin-walled box, the majority of these structures have a straight soffit. Consequently, considering longitudinal post-tensioning, this system is also unbalanced, requiring additional negative-moment steel. Full diaphragms are required at all interior piers and abutments. The preferred substructure type is the flared, rounded pier, which provides direct support for the two internal webs and provides the potential for a solid transverse moment connection, if required for seismic force effects.

For type A, B, or D, concrete is placed to full depth in a single operation. For type C, it is poured in three stages. First, the bottom slab is placed with dowels for connecting the web reinforcement as shown in Figure 59-3H. Next, the web steel is assembled, to which the rigid tendon ducts are attached, then the web concrete is placed between removable forms. The last step is to construct a form for the top slab, assemble its reinforcement, and pour the concrete. Thus, a surprisingly large structure can be built without the need for expensive machinery, if it is reasonably close to firm ground.

The system is suitable for an alignment with moderate curvature and skew. The structure is usually analyzed with the piers as a framed spine beam to obtain moment, shear, and torsion. For the latter, this system offers excellent resistance. If practical, the top slab should satisfy the requirements of the empirical-design process.

59-3.02(04) Type D: Two-Way Post-Tensioned, Cast-in-Place Concrete Spine-Beam with Cantilevers

Type D can be used for any layout. It is especially suitable for an excessively curved or skewed alignment, and is rather insensitive to the location of its piers. The cross section is basically a variation of type B in which the application of large, cantilever overhangs reduces the weight of the superstructure. Above a certain structural depth, it becomes economical to further reduce the structure weight with round voids which are formed by means of stay-in-place steel pipes.

The voided deck has a tendency to crack at the top near the centerline of the voids. To prevent the formation of cracks in the bridge, a number of preventive measures have been introduced, the most significant of which is transverse post-tensioning of the top. This transverse post-tensioning lends itself to the formation of large cantilever overhangs and, thus, a dual use. This improved version, with or without voids, is illustrated in Figure 59-3 I.

Considering span range, the type D system is a transition between the type B solid slab and type C cellular deck. Its cross section is not as effective as that of the cellular deck, but because its whole depth can be placed in one operation, it is less labor-intensive.

The largest void used is approximately 1.2 m in diameter, providing for a structural depth of approximately 1.5 m. A narrow bridge, as illustrated in Figure 59-3 I, needs a minimum of two voids. As the core widens or the structural depth decreases, the voids will be more numerous but of lesser diameter. If the core-void ratio, with the area of the wings excluded, does not exceed approximately 30%, a solid cross section, as shown in Figure 59-3 I, is recommended. To be economical, the void ratio should be approximately 35%. If the ratio exceeds 40%, the *LRFD Specifications* considers the deck as cellular (box) construction.

For the piers, slender, round columns may be used. For a short bridge, such as an overpass, the columns may be framed into the superstructure. For a longer bridge, sliding bearings should be applied. A long structure with flat horizontal curvature requires intermittently-located wide piers with two bearings to provide torsional stability. A sharply-curved structure has a high degree of inherent stability, therefore, stabilizing by means of two bearings or a line support, is needed only at the abutments.

59-3.02(05) Type E: Prestressed, Precast Concrete Beams

Precast, prestressed concrete I-beams were initially adopted as AASHTO types II, III, and IV. Later, types I, V, and VI were added to extend their span range at both the lower and upper ends of the spectrum.

Currently, the AASHTO I-beam types I, II, III, and IV are used, along with the Indiana bulb-tee beams for longer spans. Prestressed, precast concrete box beams are also acceptable for a shallow construction depth. However, they should not be placed either partially or entirely below the Q_{100} elevation.

Figure 59-3J illustrates a typical superstructure cross section with prestressed, precast concrete I-beams.

For a preliminary selection of an I-beam size and spacing, see Figure 59-3K, Prestressed Concrete I-Beam Selection Chart. The slab overhang should be as wide as possible but should be in accordance with the overhang criteria provided in Section 61-5.02.

For a wide beam spacing, if foundation conditions permit, the beams could be individually supported by drilled shafts as shown in Figure 59-2A(c), instead of a continuous pier cap.

Figure 59-3L illustrates three variations of prestressed, precast concrete box beams. Alternative (a) is an open-box cross section. Its advantage over a closed box is in the forming of the beam. Alternative (b) is a closed box, sometimes referred to as spread-box design, with a constant depth, cast-in-place deck. Alternative (c) is a keyed-in design. For transverse continuity of the deck, it should have the top reinforcement shown, but not dedicated shear connectors. All three alternatives can be spaced up to approximately 4.6 m.

Precast beams should be continuous in the longitudinal direction for transient loads. In this arrangement, the beams retain their individual bearings, but their ends are incorporated in a common diaphragm which is cast monolithically with the deck.

The reinforcement for flexural continuity is located in the deck. The strands are extended into the diaphragm to prevent separation at the bottom that may occur as a result of the upward bowing of the prestressed beam due to creep. The tendency for creep can be minimized by permitting the beam concrete to mature prior to placing the deck. The extended strands also increase the shear resistance of the prestressed beams.

This system is adaptable to any skew. Horizontal curvature cannot easily be matched with a continuous structure, but only by means of a series of chorded spans laid out in a segmental form.

59-3.02(06) Type F: Bulb-Tee Beams Made Continuous by Post-Tensioning

Precast beams of any cross section can be made continuous for both permanent and transient gravity loads by the application of longitudinal post-tensioning. However, the scheme is provided herein in conjunction with the bulb-tee because it appears to offer the best structural efficiency for this type of construction with particular reference to its large bottom flange required to resist high negative moments in compression. This efficiency is achieved by a certain level of sophistication in construction technology which is well within current practice, but not uniformly practiced nationwide.

Figure 59-3M illustrates the cross section of the Indiana bulb-tee beam. In addition to making the beam structurally effective, the wide top flange provides lateral stability, reduces the deck area to be formed, and furnishes a safe and comfortable walkway for the construction crew.

Consideration should be given to the limits of practical hauling from the plant to the work site when selecting span length and beam type and size. Fabricators should be contacted early in project development for information regarding the feasibility of hauling to a specific site.

The trajectory of the tendons follows that shown in Figure 59-3F. The draped tendons should be as close as practical to the outer fibers of the beam, because the structural effectiveness of a tendon is directly proportional to the vertical distance between its highest and lowest points. If the sidespan is identical with the internal one and if the end is butted by another structure, the tendon anchorages may be located in the top of the beam, as shown in Figure 59-3N, to increase tendon efficiency and to avoid congestion. In either situation, an end-block at the anchorage end of the end beam will be required. One structure should not include more than four continuous spans.

Figure 59-3 O illustrates a somewhat intricate but convenient system of relatively large spans built from transportable, precast bulb-tee elements. The span element is the same as discussed above. The pier element is also the bulb-tee cross section but with a haunched soffit for improved negative-moment effectiveness. To avoid temporary falsework, thin-walled twin piers, as shown in Figure 59-2E(e) may be used. For temporary stability, each set of pier elements should be joined together by four diaphragms and the deck. The span elements and the deck above them should be constructed with two-stage post-tensioning. Both systems accept unlimited skew but no curvature.

59-3.02(07) Type G: Deck System with Prestressed, Precast Longitudinal Elements

Prestressed, precast concrete longitudinal members of various cross sections have been used to create a bridge deck. The performance of these deck systems has not always been desirable due to the disintegration of longitudinal shear keys between the members. The keys, unprotected by transverse pressure, become vulnerable due to shortening and warping of the prestressed members, and they fail to transfer live-load shear. This results in potential overloading of the members and in an essentially unresolvable maintenance problem for the deck.

The beneficial effect of keeping the keys under transverse pressure had been recognized previously, and third-point transverse post-tensioning had been introduced as an option. Unfortunately, the combination of low prestress, the unmatched side surfaces of the members, and the quality of the keys, has rendered this improvement ineffective. The grout in the key is impossible to inspect due to the way the key is formed.

LRFD Specifications Article 5.14.4.3 requires a wet joint of not less than 175 mm deep between the members. In lieu of the traditional key, the *LRFD Specifications* gives preference to a V-shaped joint which is easy to fill and convenient to inspect. The post-tensioning ducts must be located at the mid-depth of the joint, and not at the mid-depth of the beam. The minimum

transverse prestress across the joint is 1.7 MPa, or 285 kN/m of length, which is a force nearly two orders of magnitude higher than the traditional value. If the deck is not transversely post-tensioned, it requires a structural overlay of not less than 115 mm depth.

The current practice is as follows:

1. Precast members almost always have a composite structural-concrete overlay (125 mm minimum depth).
2. Precast members are transversely post-tensioned whether or not a structural overlay is used.
3. A traditional trapezoidal key is used instead of a V-shaped key.
4. The wet joint between elements is 200 mm deep.

As illustrated in Figure 59-3P, there are four basic precast, prestressed concrete members which can be economically assembled into a simply-supported deck system. In descending order of span length, these are the single tee, the double tee, the box, and the solid slab. The *LRFD Specifications* also includes channel sections, but these will herein be considered as a double tee with truncated cantilever overhangs. The precast members either serve as the finished roadway or provide an uninterrupted formwork for a structural-concrete overlay.

The depth of the top flange, *d*, of the sections should not be less than 165 mm if post-tensioned, and not less than 100 mm if overlaid. If the member is transported by truck, its width should not exceed 2.5 m. There is an incentive to decrease the number of joints in the deck, but this results in larger members. The designer should investigate the transportability and erectability of the members considering both weight and geometry, early in project development, with potential contractors. Although the double tee has a less than perfect cross section considering structural efficiency, this is offset by ease of forming.

For simplicity, only the box alternative is shown for the two methods of assembly as outlined above. Figure 59-3Q is applicable to all four basic sections. For a box or slab section, end diaphragms are not required. For a single- or double-tee section, end diaphragms are required. Because it is nearly impossible to manufacture perfectly matched precast members, the surface of the grouted and post-tensioned deck should be ground, where necessary. For this, the minimum specified depth of top flange should be increased by 12 mm.

No variation of this system is applicable to a curved alignment. Skew is possible, but forming and casting the ends of each member with an angle of other than 90 deg will cause some difficulty in manufacturing. The desirable limit for skew is 30 deg. A skew angle of greater than 45 deg not permitted. This system can also be made continuous in the longitudinal direction by using a monolithic diaphragm and continuity steel or longitudinal post-tensioning similar to precast-concrete beams discussed earlier. A double tee, however, which lacks an effective

bottom flange, requires other measures to improve the compressive strength of the stems at the point of junction.

59-3.02(08) Type H: Segmental Concrete Box

The use of a segmental concrete structure may be considered for the following:

1. a bridge with long spans;
2. a long bridge with medium-length spans and limited vertical and horizontal curvature designed with essentially identical precast segments; or
3. a sharply-curved bridge where cast-in-place operations are not permitted.

The metal formwork, especially built for each construction, is expensive, and one of the above reasons should be used to justify the use of this structure type.

Figure 59-3R illustrates a typical cross section with a single cell. This type of superstructure has its own technical literature with reference to long spans. A summary can be found in the AASHTO *Guide Specifications for Design and Construction of Segmental Concrete Bridges*. The segments can be assembled by means of either span-by-span or balanced-cantilever methods, using either precast or cast-in-place concrete segments. The preferred way of longitudinal post-tensioning is by means of internal bonded tendons, but longitudinal post-tensioning with unbonded tendons is also permitted. These are threaded through deviation blocks and anchored in the diaphragms of the adjacent spans. To avoid longitudinal cracking, the top slab should be transversely post-tensioned.

The segmental interfaces should be match-cast and should include shear keys, and they should be bonded with epoxy adhesive.

59-3.02(09) Type I: Composite Steel Rolled Beam

Low structural depth, thick webs, and wide flanges characterize most of the steel beams rolled today. Therefore, most of these beams are considered compact sections that do not require intermediate web stiffeners and require minimum lateral support. They are not economical based only on least steel weight. Instead, economy is derived from low fabrication costs and minimal or sometimes nonexistent wind or sway bracing. Section 64-5.03 requires that intermediate diaphragms be used at a maximum spacing of 7.6 m unless a detailed analysis is performed in accordance with *LRFD Specifications* Article 6.7.4.

The maximum spacing of the beams should not exceed 3.4 m. The depth-to-span ratio for the beam plus slab should not exceed 1:24 for simple spans or 1:33 for continuous spans. For continuous spans, the span is the distance between points of dead-load contraflexure.

Cover plates for rolled beams are prohibited on tension flanges. Weathering (unpainted steel) should be used to lower the future maintenance cost. See Figure 64-1A for steel weight curves, which can be used to provide a preliminary estimate of steel weight. With proper diaphragms, this structure type is suitable for a skewed or horizontally-curved alignment. See Section 64-1.0 for more information.

See Figure 59-3S for a typical steel rolled beam section.

59-3.02(10) Type J: Composite Steel Plate Girder

Steel plate girders may be used in lieu of steel rolled beams for spans that are uneconomical, or not feasible, for that type of structure. The maximum spacing of the girders should not exceed 3.8 m. The depth-to-span ratio for the girder plus slab should not exceed 1:20 for simple spans or 1:28 for continuous spans. For continuous spans, the span is the distance between points of dead-load contraflexure. Weathering (unpainted steel) should be used to lower the future maintenance cost. See Figure 64-1A for curves that can be used to provide a preliminary estimate of steel weight.

It is seldom economical to use the thinnest web plate permitted by AASHTO. The use of a thicker web and few or no intermediate transverse or longitudinal stiffeners should be investigated. For appearance, transverse stiffeners should be located on the inside of the outside girders. With proper diaphragms, this structure type is suitable for a skewed or horizontally-curved alignment. See Section 64-1.0 for more information.

See Figure 59-3T for a typical composite steel plate girder section.

59-3.02(11) Type K: Composite Open Steel Box Girder

Single steel box girders, usually closed on the top by an orthotropic steel deck, are used for very large spans which are rarely required. As illustrated in Figure 59-3U, the lack of fatigue-prone sway and wind-bracing connections make the open steel box less susceptible to fatigue damage, and the use of two girders as a minimum is permitted. This system is highly adaptable to a curved alignment and where the available structural depth is limited. Moderate skew causes no problems.

During transportation and construction, the open box may require sway and internal (wind) bracings. The mechanically connected sway bracings should be removed after construction. If too much torsional rigidity is provided to the boxes, they may cause longitudinal cracking in the slab, especially if the slab had been empirically designed. A minimum of two bearings per girder should be used to provide adequate torsional resistance. For the same reasons, a solid diaphragm with an access hole should be placed at all bearing points.

Transverse web stiffeners may be required, but the use of longitudinal web stiffeners should be avoided.

59-3.02(12) Type L: Wood Superstructure

The use of a wood superstructure is limited to a low-volume, local road, and is subject to the approval of the Production Management Division's Office of Structural Services manager. See Section 65-1.02. A wood bridge may be an attractive alternative for a small span or a temporary bridge. Wood can be used either as a deck and or can be directly supported by wood trestles (piers).

As illustrated in Figure 59-3V, there are two basic variations for use as a deck unsupported by other components. The deck may be constructed from wood panels, prefabricated either by gluing or spiking, which are of full-span length and are connected together by bolting spreader beams to the underside of the panels at intervals not exceeding 2.4 m. The *LRFD Specifications* permits the use of this type of deck without spreader beams, but its use is not recommended. The deck should have an asphaltic wearing surface. Because the use of this deck is limited to simply-supported spans, it is recommended for a rural or secondary road where a rectangular layout can easily be achieved.

Alternatively, the deck can be constructed from prebored longitudinal laminates which are laid out in a staggered design and assembled by means of transverse post-tensioning. The laminates are held together by means of interface friction, and no other fasteners are required. To improve rideability and surface friction, the use of an asphaltic surface treatment is mandatory. The system lends itself to continuous construction with limited curvature, but with unlimited skew.

Two other alternatives are also available for a transversely post-tensioned wood deck. One includes glued wood ribs, by which the flat deck is transformed into a series of tee-beams. The second is an extension of the first by the addition of a post-tensioned bottom flange by which a cellular cross section is created.

Either flat deck can also be used as a transversely positioned slab supported by longitudinal beams. The post-tensioning will run longitudinally in the laminated deck.

As illustrated in Figure 59-3W, wood can be used also as a primary longitudinal component as either sawn or native, in closely-spaced stringers or widely-spaced glue-laminated beams. For composite construction, the concrete slab must be keyed into the top of the wood component and secured by the help of spikes. Both alternatives permit skew, but neither permit curved alignment nor continuous construction.

59-3.02(13) Type M: Structure Under Fill

This type of structure may be an attractive alternative for a small stream or ditch crossing, a minor highway or street crossing, or a pedestrian or animal crossing. This type of structure may be made of steel, aluminum, or concrete. The most common configurations used are the three-sided concrete or steel structure, four-sided precast concrete box structure, structural plate pipe arch, or circular pipe.

The structure-sizing process is performed in accordance with a priority system. This system consists of six trials where specific installations are considered prior to evaluating other structure types, such as a reinforced cast-in-place concrete slab. The design priority system is as follows:

Trial 1: single circular-pipe installation.
Trial 2: single deformed-pipe installation.
Trial 3: single specialty-structure installation.
Trial 4: multiple circular-pipe installation.
Trial 5: multiple deformed-pipe installation.
Trial 6: multiple specialty-structure installation.

The principles of the priority system are summarized below.

1. A pipe structure is preferred to a specialty structure (precast concrete box section, precast concrete three-sided structure, or structural plate arch).
2. A circular pipe is preferred to a deformed pipe.
3. A single-cell installation is preferred to a multiple-cell installation.

See Section 28-6.0 and Chapter Thirty-one for more information on the culvert-sizing process and the pipe-material-selection process. For pipe-material selection, use the Pipe Material Selection Software discussed in Section 28-6.05. Additional considerations and design criteria for each type of buried-structure system are provided in *LRFD Bridge Design Specifications*, Section 12.

If a single or multiple specialty-structure installation is selected, the designer should contact the manufacturers of the specialty structure, and also become familiar with the INDOT *Design Guidelines for Three-Sided Drainage Structures*.

59-4.0 EVALUATION FACTORS

59-4.01 Foundation Considerations

The *LRFD Specifications* require consideration of scour and jacking capabilities for an optimum design of a highway bridge substructure. These are discussed below.

59-4.01(01) Scour

The majority of bridge failures are due to scour. Therefore, *LRFD Specifications* Section 2 mandates requirements to address this problem. The *LRFD Specifications* will have a substantial impact on the design of a substructure located in a waterway or a floodplain. In addition to scour, Section 2 provides requirements regarding the stability of a riverbed, the protection of embankments, and various environmental issues.

See Part IV for more discussion on hydraulic scour and channel stability.

59-4.01(02) Jacking Capabilities

The lack of a sufficient subgrade database, a large variation of subgrade characteristics within the boundaries of the bridge site, and less than adequate structural modeling of the subgrade may sometimes result in settlement much different from estimated values. Although a uniform settlement of an entire bridge site may have little importance, differential settlements within a substructure unit or among several units might have significant impacts on rideability, structural safety, and general appearance.

To anticipate this, the *LRFD Specifications* requires that the superstructure be jackable at every bearing point. High-pressure jacks need very little space. However, the space required should be provided or the feasibility of temporary jacking supports should be investigated. If temporary supports are feasible, the space within the permanent structure for jacking need not be provided. Where the substructure and superstructure are framed into each other, this facility for correction or adjustment cannot exist. This should be reflected in the selection and design of the substructure and foundation.

59-4.02 Aesthetics

LRFD Specifications Article 2.5.5 emphasizes the objective of improving the appearance of each highway bridge. It promotes uninterrupted lines, contours that follow the flow of forces, and the avoidance of cluttered appearances. The provisions on aesthetics have been prompted because many bridges have been exclusively selected and designed on the basis of construction cost or engineering simplicity with disregard for their appearance and for their conformance with the environment.

The bridge design must integrate the basic elements of efficiency, economy, and appearance. Regardless of size and location, the quality of the structure, its aesthetic attributes, and the resulting impact on its surroundings must be considered. Achieving the desired results involves full integration of the basic elements listed above, and the designer's willingness to accept the challenge and opportunity presented.

An aesthetically-designed bridge will then be pleasing in and of itself, and will be compatible with the site by proper attention to form, shapes, and proportions. Attention to detail is of primary importance in achieving a continuity of line and form. The rule of form following function shall be used. The designer must consider the totality of the structure and its individual components and environment of its surroundings. A disregard for continuity or lack of attention to detail can negate the best intent. Formulas cannot be established. However, the following references can provide excellent guidance.

1. *The Tower and the Bridge*, Billington, D.P., Basic Books.
2. *Bridges: Aesthetics and Design*, Leonahardt, F., Deutsche Verlags-Anstalt
3. *Esthetics in Concrete Bridge Design*, Stewart C. Watson and M. K. Hurd, Library of Congress Catalog Card Number 89-85388.
4. *Aesthetic Bridges User's Guide*, Maryland Department of Transportation, State Highway Administration, Office of Bridge Development.
5. *Bridge Design, Aesthetics and Developing Technologies*, Adele Fleet Bacow and Kenneth E. Kruckemeyer, Library of Congress Catalog Card Number 86-061840.
6. *Bridge Aesthetics Around the World*, Committee on General Structures, Subcommittee on Bridge Aesthetics, Transportation Research Board, National Research Council.
7. *Aesthetic Guidelines for Bridge Design*, Minnesota Department of Transportation.

The designer is expected to be well read on the subject of bridge aesthetics and committed to fulfilling both the structural and aesthetic needs of the site. The challenge differs for a major or a minor structure. The challenge may be greater for a smaller project. A major structure, because of its longer spans, taller piers, or curving geometry, often offers inherent opportunities not available for its minor counterpart.

Aesthetic considerations should be made for each of the situations as follows:

1. a bridge that is highly visible to a large number of users, such as one passing over an Interstate route;

2. a bridge located in or adjacent to a park, recreational area, or other major public gathering point;

3. a pedestrian bridge;

4. a bridge in an urban area in or adjacent to a commercial or residential area; or

5. a multi-bridge project with interchanges or corridors with conformity of theme and appearance without abrupt changes in structural features.

If significant aesthetic expense is proposed or where unusual circumstances exist, seek advice from the Department's Aesthetics Committee.

The levels of aesthetic consideration and effort required are as follows:

1. Level One. This consists of cosmetic improvements to a conventional bridge type. These improvements consist of the use of masonry coatings or color pigments in the concrete, texturing the surfaces, modification to barrier walls and beams, and the use of open steel or concrete railings. Providing more-pleasing shapes of columns or caps for the substructure should also be studied.

2. Level Two. This emphasizes the full integration of efficiency, economy, and appearance into all bridge components and the structure as a whole. Consideration should be given to structural systems that are inherently more pleasing such as hammerhead or T-shaped piers, oval or polygonal-shaped columns, integral caps and bents, piers in lieu of bents, smooth transitions at superstructure-depth change locations, box- or arch-type superstructures, etc.

3. Level Three. This applies more to the overall aesthetics when passing through or under an interchange or at another site such as a historic or highly-urbanized area where landscaping or unique neighborhood features must be considered. This level may require a subconsultant such as a landscape architect, input from the Department's Aesthetics Committee, or both.

The aesthetic levels described above are not exclusive. For aesthetic Level Two or Three, public input may be appropriate.

59-4.03 Construction and Falsework

The *LRFD Specifications* requires that, unless there is a single obvious method, at least one sequence of construction should be shown on the plans. This is especially important for a bridge which is to be constructed from large prefabricated elements. For competitive bidding, the contract documents may indicate whether alternative sequences are acceptable. If an alternative sequence is allowed, the contractor should prove that stresses, which accumulate in the structure during construction, will stay within acceptable limits. For a new structural system or for a traditional system with untried dimensions, the designer should consult with the Office of Structural Services for approval.

Temporary falsework is an expensive construction item. The superstructure systems listed in Figure 59-3B include cast-in-place concrete, therefore, it may need elaborate temporary supports and formwork. These systems derive their economic feasibility from the relative simplicity of construction or from the highly effective monolithic nature of the finished superstructure. If the bridge is over a waterway or will have a high finished elevation, the cost of the falsework may become prohibitive, and the designer should consider another structural system.

A reduction below the minimum vertical highway clearance during construction is not permissible without a design exception. For a 3R non-freeway project, the minimum vertical clearance value is documented in the appropriate geometric design criteria table in Chapter Fifty-five under Existing Overpassing Bridges. Where reduced clearance is desired on an Interstate route, see Sections 54-3.02(03) and 40-8.04(03). For another type of route, coordinate with the appropriate district traffic engineer and process a design exception.

A cast-in-place overpass structure should be built at an elevation higher than minimum to allow for falsework. After removal of the falsework, the superstructure is either left in place or lowered into final position. In either situation, the cost of the additional substructure and fill, or the cost of lowering, should be considered.

59-4.04 Maintainability

Open or inadequately sealed deck joints have been identified as the foremost reason for structural corrosion of structural elements by permitting the percolation of salt-laden water through the deck. To address this, a continuous deck, integral end bents, improvements in drainage, epoxy coatings, and concrete admixtures should be considered. The *LRFD Specifications* also requires that reasonable access be provided where other means of inspection are not practical. Drainage facilities should be provided in accordance with Chapter Thirty-three.

The environmental concern of removing paint from a steel structure makes the future use of a painted steel structure at least questionable. Where practical, the use of weathering steel is

preferable. During construction, however, the substructure should be protected against rust staining by wrapping, coating, or other means.

The concern in a reinforced concrete deck or slab is the corrosion of the reinforcing bars, the volumetric expansion of corrosion products, and the resulting spalling and delamination of the concrete. The empirical deck design, introduced in the *LRFD Specifications*, permits a reduced amount of top reinforcement. Therefore, the epoxy-coated empirically-designed reinforcement should provide better spall resistance than a conventionally-designed deck.

59-4.05 Adaptability to Future Widening

Almost every superstructure type can be widened, but not with the same level of ease. A slab, deck on beams or girders, or system consisting of prefabricated concrete or wood elements each lends itself to such reconstruction, while a large concrete box, through-type superstructure, or that with substantial wings does not. If a definite need for future widening exists, these latter structural types should not be considered.

Where transverse post-tensioning is applied to a structure which may be widened, the cable ducts should be left ungrouted as in a laminated wood deck, or the end anchorage hardware should be designed to permit extension by coupling the new tensioning elements to the existing ones.

Where the need for future widening exists, consideration should be given to designing the underwater or underground parts of the substructure, with the exception of extended pile types, to include what may be needed for future widening.

59-4.06 Cost

Structure-type selection should not be based solely on initial construction costs. These initial costs depend on a variety of factors including the following:

1. type of structure;
2. economy of design;
3. general state of the economy;
4. vicinity of fabricating shops; and
5. cost of structural materials and labor.

These factors may change rapidly, and the designer may have no control over them. A review of the cost of structural components within a bridge, and approved change orders and cost reduction proposals for completed work, may direct the designer toward a more economical solution.

The bridge should be designed for the weight of a future wearing surface. Life-cycle analyses should include resurfacing at regular intervals.

Corrosion protection is, and will likely remain, the largest maintenance-cost item for a painted steel structure. Although the cost of repair has escalated due to environmental concerns, the evolution of highly-resistant paints can also be expected.

59-4.07 Environment

The Office of Environmental Services' Environmental Assessment Team will perform the environmental studies. The designer should consider the following environmental factors in the analysis for structure-type selection.

1. Waterway Crossing. A minimum number of piers should be used.

2. Sensitive Area. Environmental impacts should be minimized in a sensitive area (e.g., near wetlands).

3. Discharge of Fill. Any discharge of fill below the Ordinary High Water will require a U.S. Army Corps of Engineers Section 404 permit. The type of permit will depend upon the amount and type of fill discharged. See Chapter Nine.

59-4.08 Railroad

Railroad geometric requirements must be considered in structure-type selection for a highway bridge over a railroad. Chapter Sixty-nine provides specific requirements which will apply to the bridge design.

59-4.09 Utilities

The bridge design must be consistent with utility-accommodation policies. These are documented in Chapter Ten.

59-5.0 STRUCTURE-TYPE STUDIES

59-5.01 General

Chapter Two provides a network specifically for a new bridge or bridge reconstruction project. The network illustrates the point in project development at which the structure-type selection will occur.

In performing the studies for structure-type selection, the designer should consider economy, aesthetics, foundation problems, ease of construction, future maintenance, and future modification of the bridge. All existing conditions, such as existing structure, natural obstacles, utilities, unusual soil conditions, stream characteristics, traffic maintenance, and hydraulic and clearance requirements, should be known at the time of the structure-type selection.

The necessary effort to perform a structure-type study depends upon the project type and its complexity and size. For a minor bridge widening or rehabilitation, grade separation, or small waterway crossing, the study should be a fairly minor work effort because the viable types of superstructure and substructure are generally limited. For widening, the structural possibilities and economical options should be investigated to determine if replacement would be more appropriate than widening. This is particularly true if the bridge is in poor condition, has a record of serious flooding or scour, is part of a route-improvement project with significant potential for attracting high traffic volume, or has a history of structural problems. Section 72-4.0 provides additional guidelines for widening an existing bridge.

For a major bridge, major interchange, or large project with many bridges, the study should be extensive and comprehensive. It should thoroughly consider all viable structure types and consider all design parameters.

Alternative layouts should be investigated to determine if single-span or multiple-span arrangements best meet the design parameters for the project.

With the ever-increasing cost of purchasing materials and services, it is essential that the designer remain abreast of the latest prices and new developments in materials and construction methods.

59-5.02 Quantity Estimating

There are two methods of performing quantity estimates. For a minor bridge, rough quantities (such as reinforcing steel based on weight per volume of concrete or by structure element such as running meter of pier or end bent) may be sufficient. For a major or complex structure, the degree of accuracy may require more exact calculations, considering that the intent is to establish relative and equitable costs between alternatives and does not require the accuracy of the final estimate.

When preparing the estimate, the unit pricing should consider the following:

1. location: urban or rural location;
2. accessibility by railroad, secondary road, or city street;
3. site topography as suitable for heavy equipment or special construction methods;
4. materials: proximity of prestressed concrete or ready-mix plant or steel fabricator;
5. phasing of traffic in single or multiple phases; and
6. time schedule: required short fabrication times.

For unit prices of concrete or steel structural members for a major bridge, the designer should contact a fabricator. For unit costs of other materials or items, or for structural members for a minor bridge, the designer should refer to the most recent bid tabulations or the current estimating software.

59-5.03 Alternative Superstructure Design Process

If an INDOT-route structure's deck area for is greater than 2000 m^2, the designer must investigate both a steel and concrete superstructure alternative. The designer should make a cost comparison using three different structure cost bases. The required cost estimates used in the cost comparison should include the superstructure and all other structure portions that are not common to both structure types.

The cost bases for the two structure types are as follows:

1. Concrete Structure. These may include standard AASHTO I-beams, modified AASHTO I-beams, Indiana bulb-tee beams, multiple box beams, or single box beams (post-tensioned or non post-tensioned, segmental or non-segmental).

2. Steel Structure. These may include rolled beams, welded plate girders, or box girders. There are two cost bases to be considered for a steel structure. The first is the unit price of the structural steel based on the current price if an alternative concrete design is not considered. The second is the unit price of structural steel based on the current price if an alternative concrete design is considered. An alternative design will lower the cost of the structural members by approximately 10% to 15%, depending on how close the bids are for the competing components and on the size of the structure.

Once the designer has developed the three structure cost estimates, a comparison must be made. The structure-type decision and the decision to include an alternative design should be based on the outcome of the comparison as described below.

1. If the cost of the concrete option is lower than that of the least-cost steel option, the structure should be designed with concrete structural members. An alternative steel design will not be required.

2. If the cost of the highest-cost steel option is lower than that of the concrete option, the structure should be designed with steel structural members. A concrete alternative design will not be required.

3. If the cost of the concrete option is between that of the highest-cost steel option and that of the lowest-cost steel option, the difference between the cost of the lowest-cost steel option and the concrete option must be compared as follows:

    a. If the difference between the cost of the concrete option and that of the lowest-cost steel option is greater than or equal to two times the projected alternative design cost, the design should be performed with both concrete and steel alternatives.

    b. If the difference between the cost of the concrete option and that of the lowest-cost steel option is less than two times the design cost, the structure should be designed using concrete structural members. A steel alternative design will not be required.

Regardless of the above, if the estimated cost of the structure exceeds $10,000,000, both a concrete and steel alternative should be designed.

The designer may obtain estimated design fee information from the Contract Administration Division's Consulting Services Office manager.

The estimated unit prices to be used for structural members are listed in Figure 59-5A.

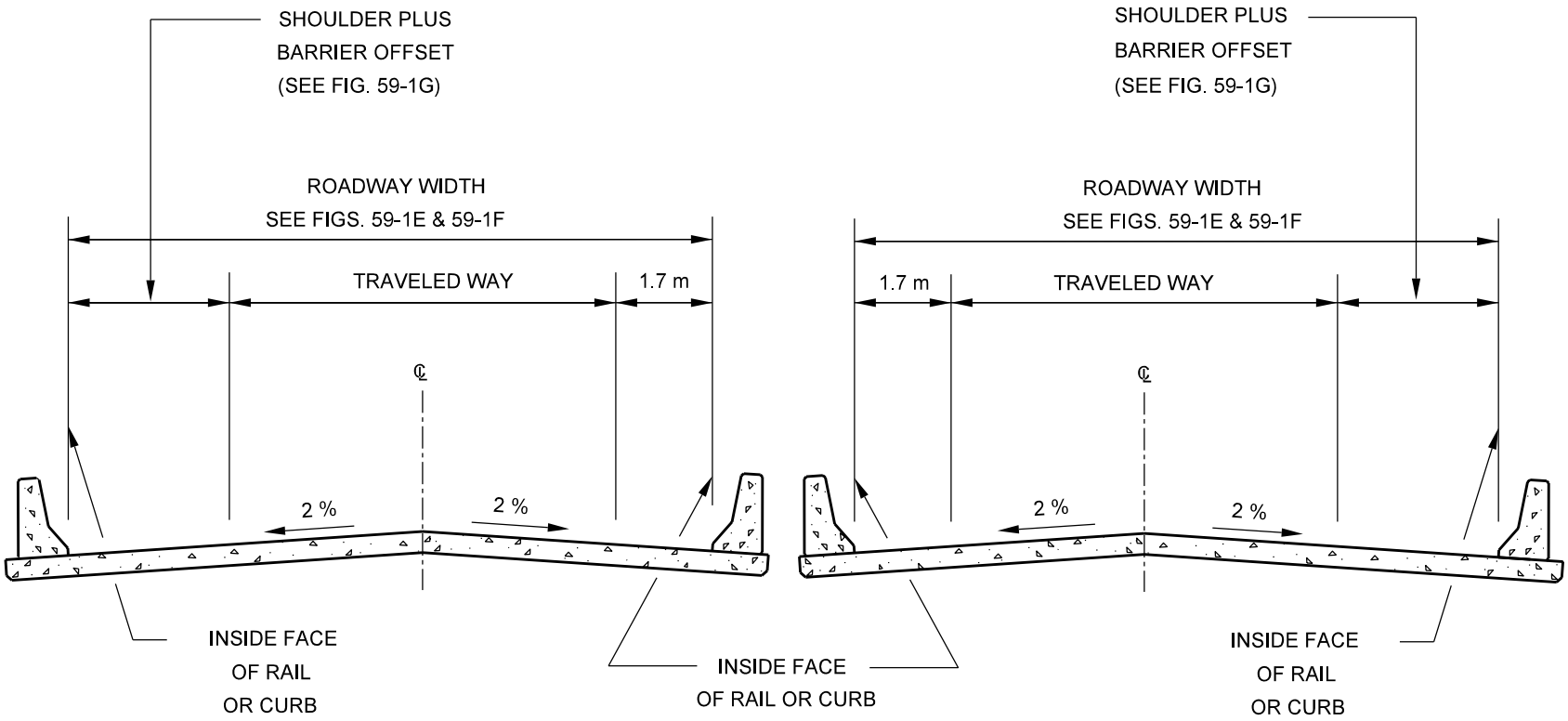

BRIDGE CROSS SECTION
(Twin Structures - Four Lanes)

Figure 59-1A

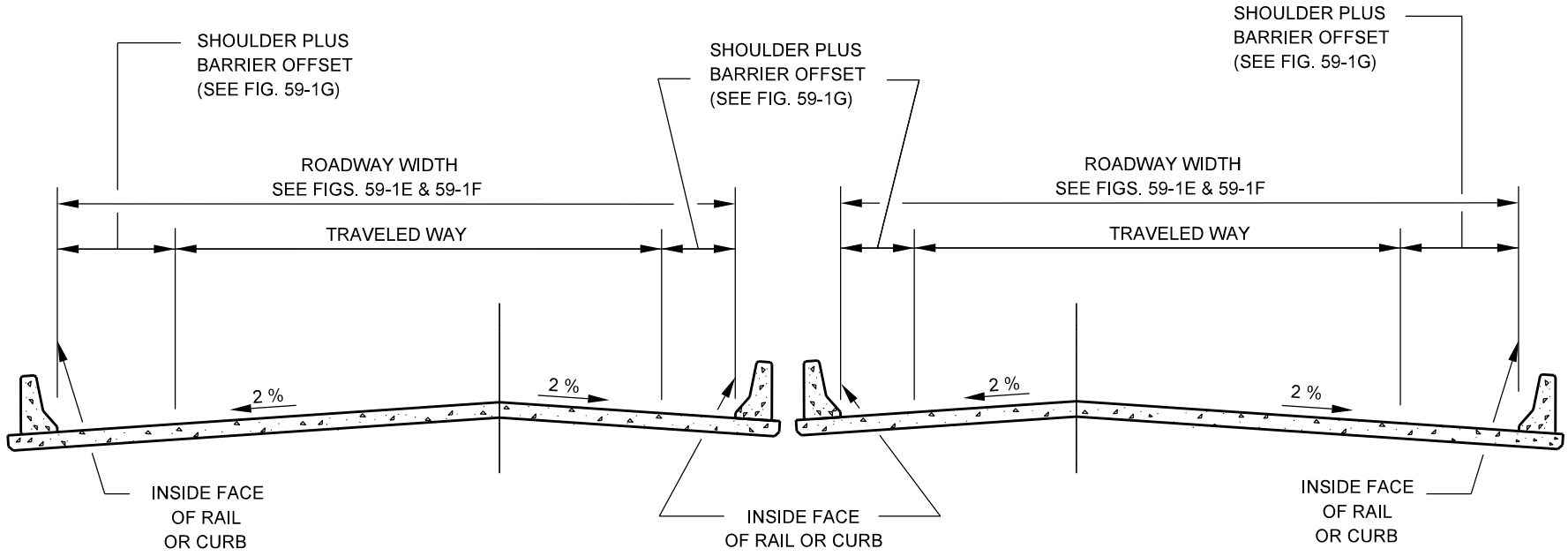

NOTES: For three lanes in one direction, the crown will be between the middle travel lane and the travel lane adjacent to the median. For four lanes in one direction, the crown will be in the center of the traveled way.

BRIDGE CROSS SECTION
(Twin Structures - Six or More Lanes)

Figure 59-1B

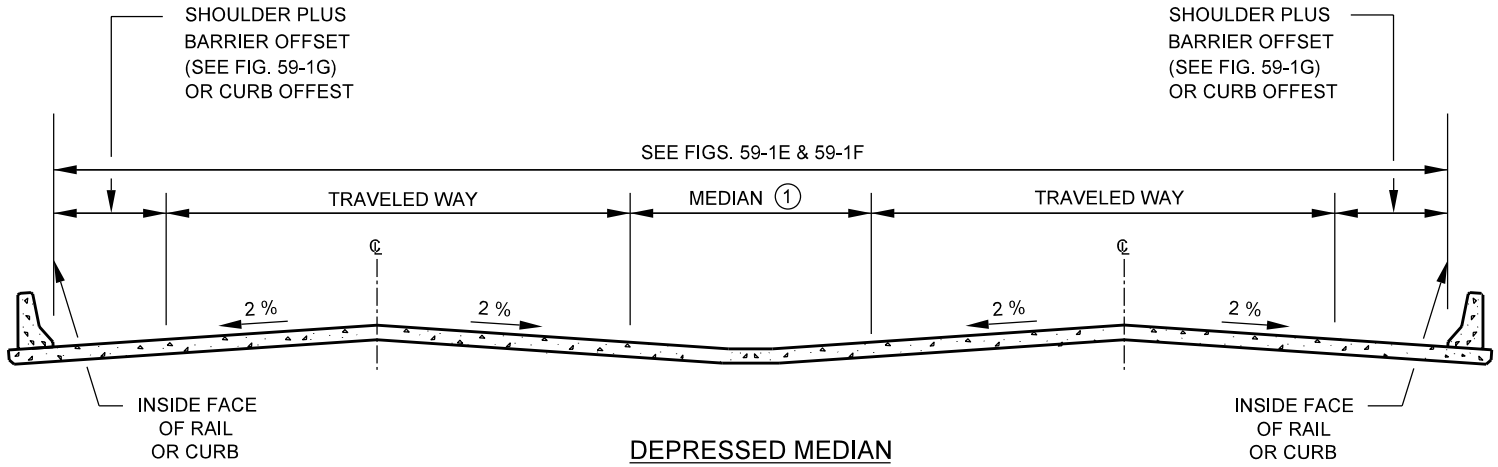

DEPRESSED MEDIAN

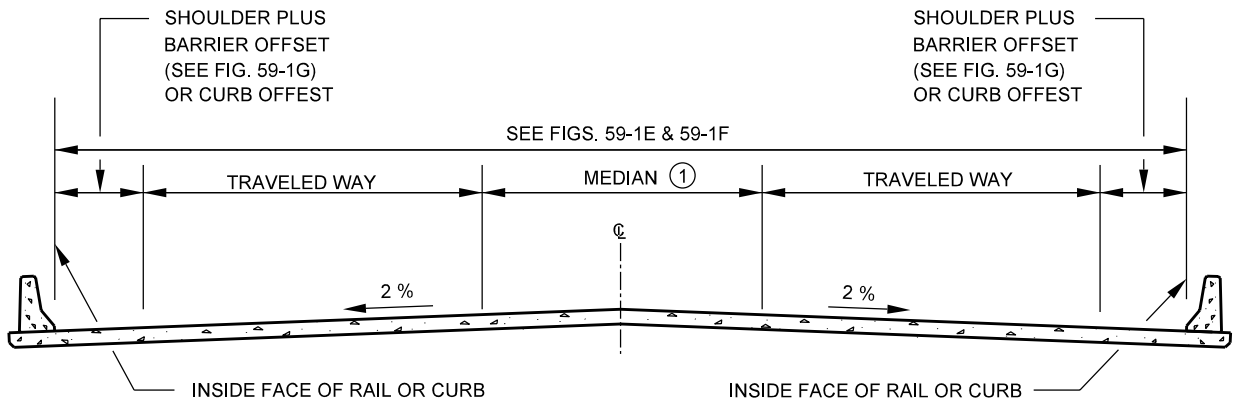

FLUSH MEDIAN

1 *In some cases, a raised island or CMB maybe warranted. See Section 59-1.01(01) for criteria on median widths for single structures.*

BRIDGE CROSS SECTION
(Divided Highways - Single Structure)

Figure 59-1C

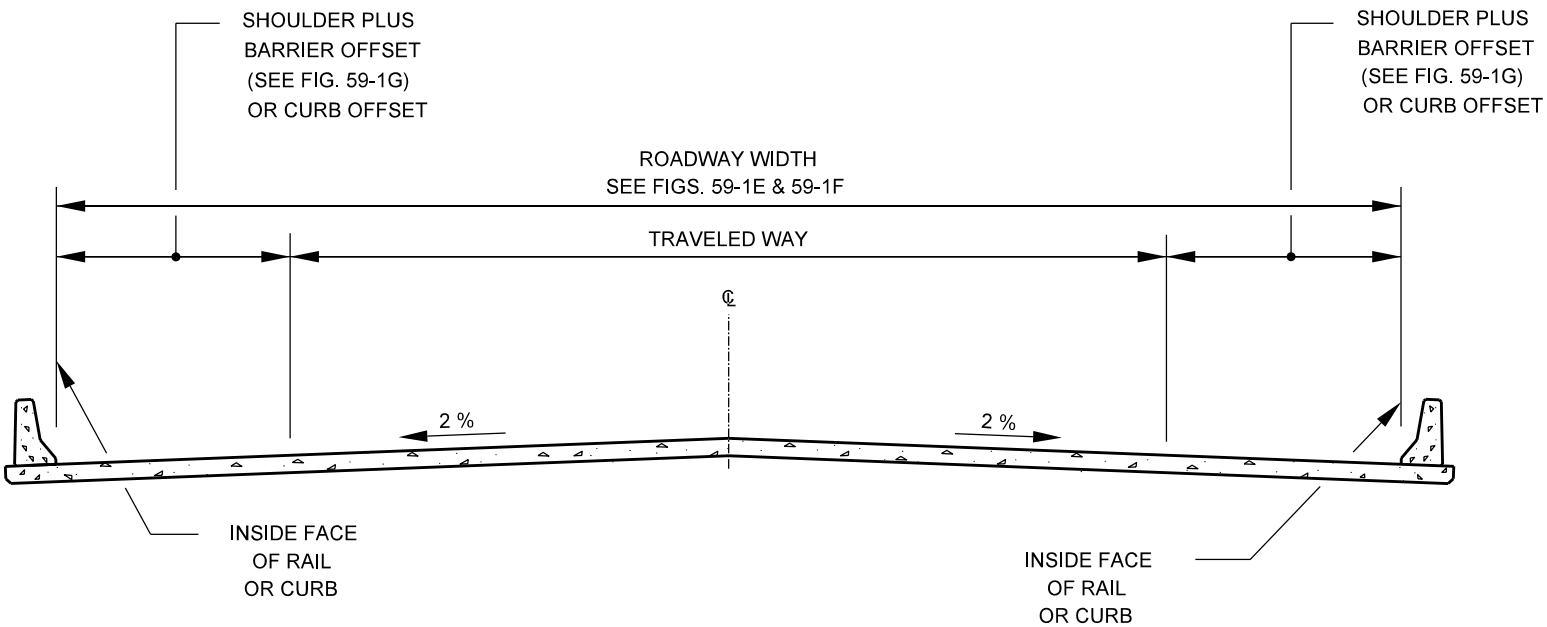

BRIDGE CROSS SECTION
(Two - Lane, Two - Way Highway)

Figure 59-1D

Type of Facility	Urban/Rural	Design-Year AADT	Bridge Clear-Roadway Width (1)
State Highway	Rural	All	(2) Min. 9.4 m
State Highway	Urban	All	Uncurbed: (2) Min. 9.4 m Curbed: Full Approach Curb-to-Curb Width
Local Agency Arterial	Rural	All	(2)
Local Agency Arterial	Urban	All	Uncurbed: (2) Curbed: Full Approach Curb-to-Curb Width
Local Agency Collector (3)	Rural	AADT < 400	Traveled way + 1.2 m (0.6-m shoulder on each side)
		400 ≤ AADT < 1500	Traveled way + 1.8 m (0.9-m shoulder on each side)
		1500 ≤ AADT < 2000	Traveled way + 2.4 m (1.2-m shoulder on each side)
		AADT ≥ 2000	(2)
Local Agency Collector (4)	Urban	All	Uncurbed: (2) Curbed: Full Approach Curb-to-Curb Width
Local Agency Local Road (5)	Rural	< 400	Traveled way + 1.2 m (0.6-m shoulder on each side)
		400 ≤ AADT < 2000	Traveled way + 1.8 m (0.9-m shoulder on each side)
		AADT ≥ 2000	(2)
Local Agency Local Street (4)	Urban	--	Uncurbed: Same as local rural road
		All	Curbed: Full Approach Curb-to-Curb Width

BRIDGE CLEAR-ROADWAY WIDTH
(New Construction / Reconstruction / 4R Project)

Figure 59-1E

Notes:

(1) The values shown in the table is the minimum. The value accommodating the shy-line offset per Figure 49-4E is desirable.

(2) Bridge Clear-Roadway Width. The bridge clear-roadway width is the sum of the following:
- *(a) the approach traveled way width;*
- *(b) the approach effective usable-shoulder widths without guardrail; and*
- *(c) bridge-railing offsets (see Figure 59-1G).*

The effective-usable-shoulder width is equal to the usable-shoulder width minus 0.3 m.

Where it is permitted to have a bridge clear-roadway width that is narrower than the travel lanes plus the effective-usable-shoulder width on each side, a guardrail transition, collinear with the bridge railing, should be provided. Thereafter, the guardrail should be flared at a 30:1 ratio until the guardrail length satisfies the length-of-need requirement or it intersects the approach guardrail.

For the median shoulders of a divided facility with two or more lanes in each direction, each bridge will have a 1.7-m median-shoulder width where a concrete shape F or type TF-2 railing is used, or a 1.8-m median-shoulder width where another bridge-railing type is used.

(3) Local-Agency Rural Collector Road. The following will apply:
- *(a) These criteria are required for a Federal-aid project.*
- *(b) Where the approach roadway width is surfaced (traveled way plus shoulders), such surfaced width will be carried across the structure.*
- *(c) The width of each bridge of more than 30 m length will be analyzed individually. At a minimum, the clear-roadway width of such a bridge will be the width of the traveled way plus a 0.9-m shoulder on each side where the AADT > 3000.*

(4) Local-Agency Urban Street. These criteria are required for a Federal-aid project.

(5) Rural Local Road. The following will apply:
- *(a) These criteria are required for a Federal-aid project.*
- *(b) The width of each bridge of more than 30 m length will be analyzed individually. At a minimum, the clear-roadway width of such a bridge will be the width of the traveled way plus a 0.6-m shoulder on each side where the AADT > 400.*

BRIDGE CLEAR-ROADWAY WIDTH
(New Construction / Reconstruction / 4R Project)

Figure 59-1E (Continued)

Type of Facility	Urban/Rural	Design-Year AADT	Bridge Clear-Roadway Width (1)
State Highway	Rural	All	(2) Minimum 9.4 m
State Highway	Urban	All	Uncurbed: (2) Minimum 9.4 m Curbed: Full Approach Curb-to-Curb Width
Local Agency Arterial	Rural	All	(2)
Local Agency Arterial	Urban	All	Uncurbed: (2) Curbed: Full Approach Curb-to-Curb Width
Local Agency Collector (3)	Rural	AADT < 400	Traveled way + 1.2 m (0.6-m shoulder on each side)
		400 ≤ AADT < 3000	Traveled way + 1.8 m (0.9-m shoulder on each side)
		3000 ≤ AADT < 5000	Traveled way + 2.4 m (1.2-m shoulder on each side)
		AADT ≥ 5000	(2)
Local Agency Collector (4)	Urban	All	Uncurbed: (2) Curbed: Full Approach Curb-to-Curb Width
Local Agency Local Road (5)	Rural	AADT < 400	Traveled way + 1.2 m (0.6-m shoulder on each side)
		400 ≤ AADT < 5000	Traveled way + 1.8 m (0.9-m shoulder on each side)
		AADT ≥ 5000	(2)
Local Agency Local Street (4)	Urban	--	Uncurbed: Same as local rural road
		All	Curbed: Full Approach Curb-to-Curb Width

BRIDGE CLEAR-ROADWAY WIDTH
(3R Project)

Figure 59-1F

Notes:

(1) The values given in this table are minimums. The values accommodating shy-line offsets per Figure 49-5F are desirable.

(2) Bridge Clear-Roadway Width. The bridge clear-roadway width is the sum of the following:
- *a. the approach traveled-way width;*
- *b. the approach effective usable-shoulder width without guardrail; and*
- *c. a bridge-railing offset (see Figure 59-1G).*

The effective-usable-shoulder width is equal to the usable-shoulder width minus 0.3 m.

Where it is permitted to have a bridge clear-roadway width that is narrower than the travel lanes plus the effective-usable-shoulder width on each side, a guardrail transition, collinear with the bridge railing, should be provided. Thereafter, the guardrail should be flared at a 30:1 ratio until the guardrail length satisfies the length-of-need requirement or it intersects the approach guardrail.

For the median shoulders of a divided facility with two or more lanes in each direction, each bridge will have a 1.7-m median-shoulder width where a concrete shape F or type TF-2 railing is used, or a 1.8-m median-shoulder width where another bridge-railing type is used.

(3) Local Agency Rural Collector Road. The following will apply:
- *a. These criteria are required for a Federal-aid project.*
- *b. Where the approach roadway width is surfaced (traveled way plus shoulders), that surfaced width will be carried across the structure.*
- *c. The width of each bridge of more than 30 m length will be analyzed individually. At a minimum, the clear-roadway width of such a bridge will be the width of the traveled way plus a 0.6-m shoulder on each side where the AADT > 3000.*

(4) Local Agency Urban Street. These criteria are required for a Federal-aid project.

(5) Rural Local Road. The following will apply:
- *a. These criteria are required for a Federal-aid project.*
- *b. The width of each bridge of more than 30 m length will be analyzed individually. At a minimum, the clear-roadway width of such a bridge will be the width of the traveled way plus a 0.6-m shoulder on each side where the AADT > 400.*

BRIDGE CLEAR-ROADWAY WIDTH
(3R Project)

Figure 59-1F (Continued)

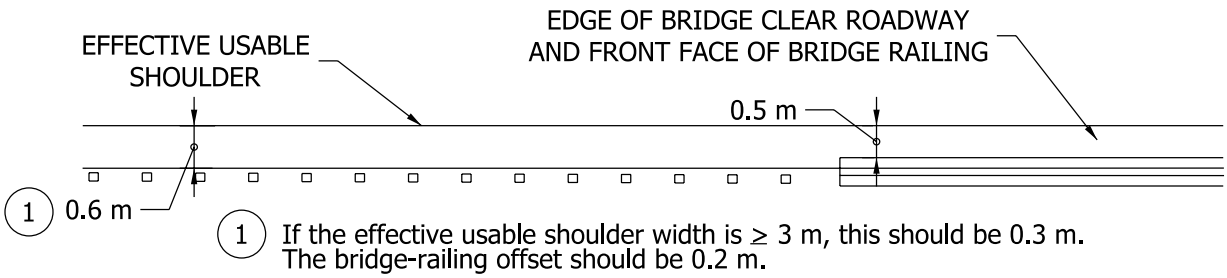

4R DESIRABLE OR 3R DESIRABLE OR AADT > 100,000

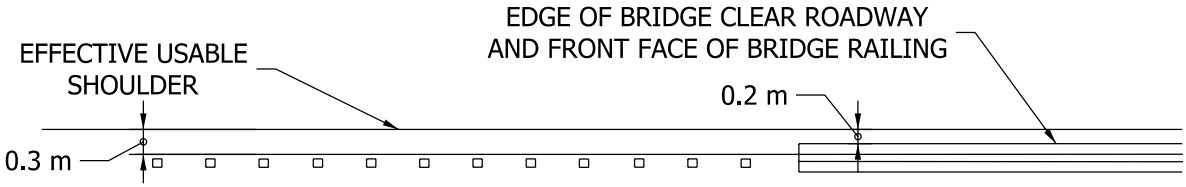

4R NEW CONSTRUCTION MINIMUM OR 3R RESTRICTIVE CONDITION

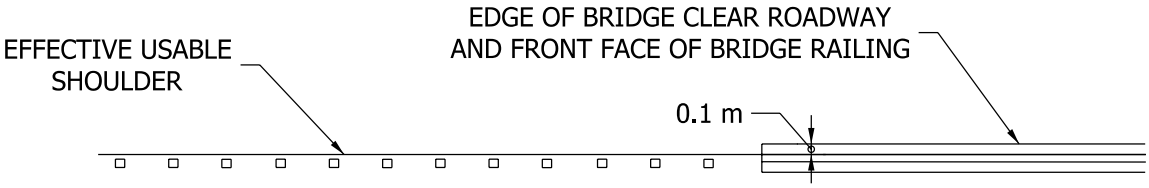

4R RECONSTRUCTION MINIMUM

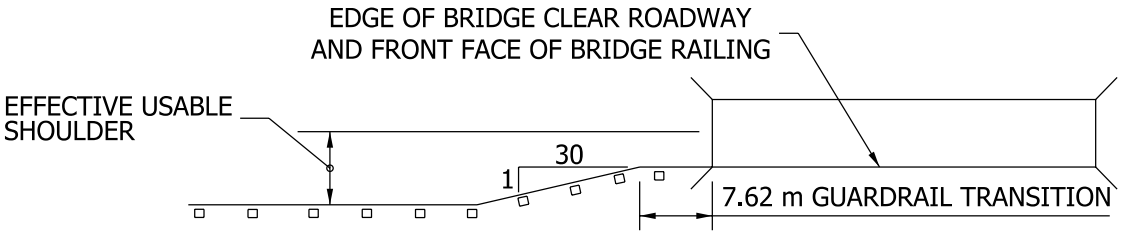

BRIDGE NARROWER THAN EFFECTIVE USABLE SHOULDER

BRIDGE-RAILING OFFSET
(Guardrail Transition to Bridge Railing Shape F or Type TF-2)

Figure 59-1G
(Page 1 of 2)

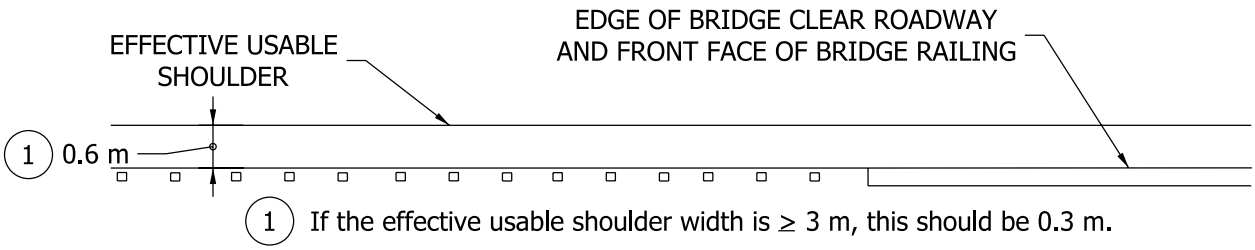

4R DESIRABLE OR 3R DESIRABLE OR AADT > 100,000

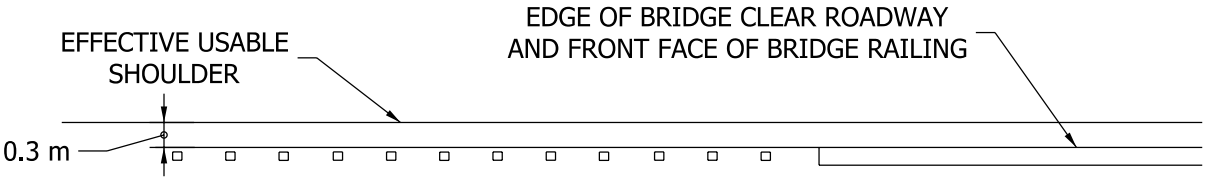

4R NEW CONSTRUCTION MINIMUM OR 3R RESTRICTIVE CONDITION

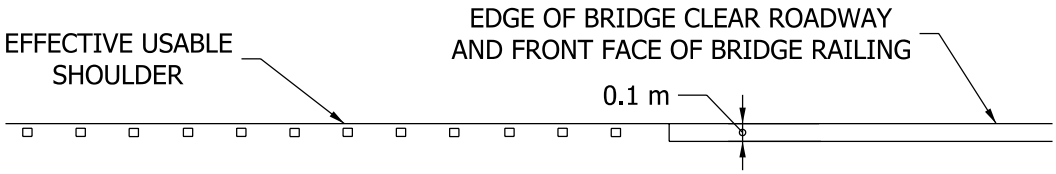

4R RECONSTRUCTION MINIMUM

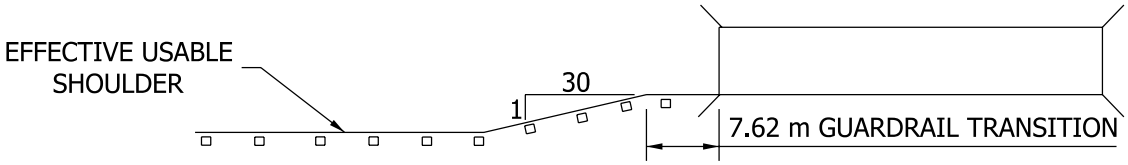

BRIDGE NARROWER THAN EFFECTIVE USABLE SHOULDER

BRIDGE-RAILING OFFSET
(Guardrail Transition to Bridge Railing Type CF-1, PF-1, PF-2, PS-1, PS-2, or TX)

Figure 59-1G
(Page 2 of 2)

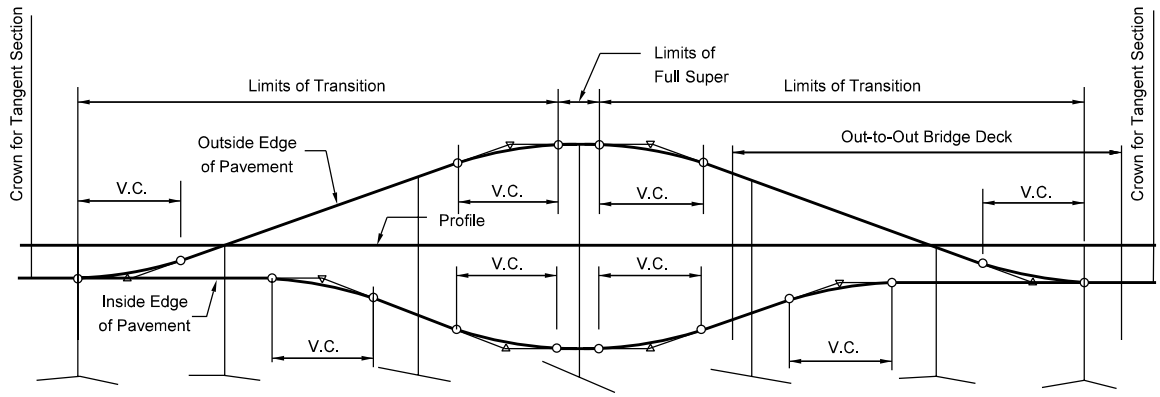

STANDARD SUPERELEVATION TRANSITION FOR TWO-LANE ROADWAY

(NOT DESIRABLE)

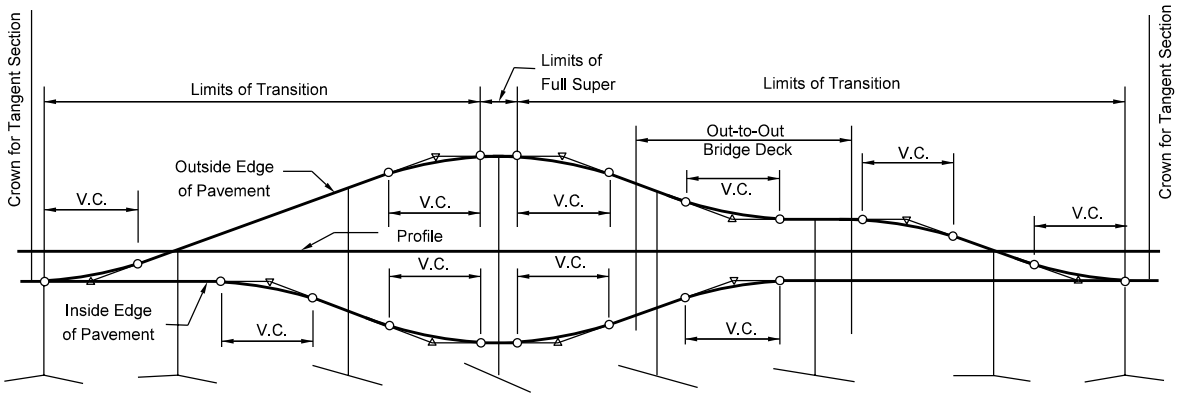

MODIFIED SUPERELEVATION TRANSITION FOR TWO-LANE ROADWAY

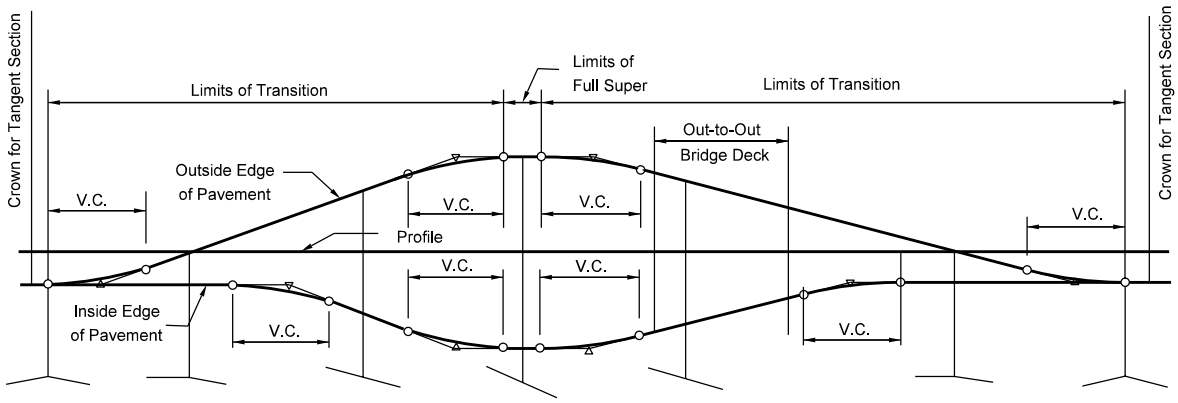

ALTERNATIVE MODIFIED SUPERELEVATION TRANSITION FOR TWO-LANE ROADWAY

SUPERELEVATION TRANSITION DIAGRAMS FOR BRIDGES

Figure 59-1H

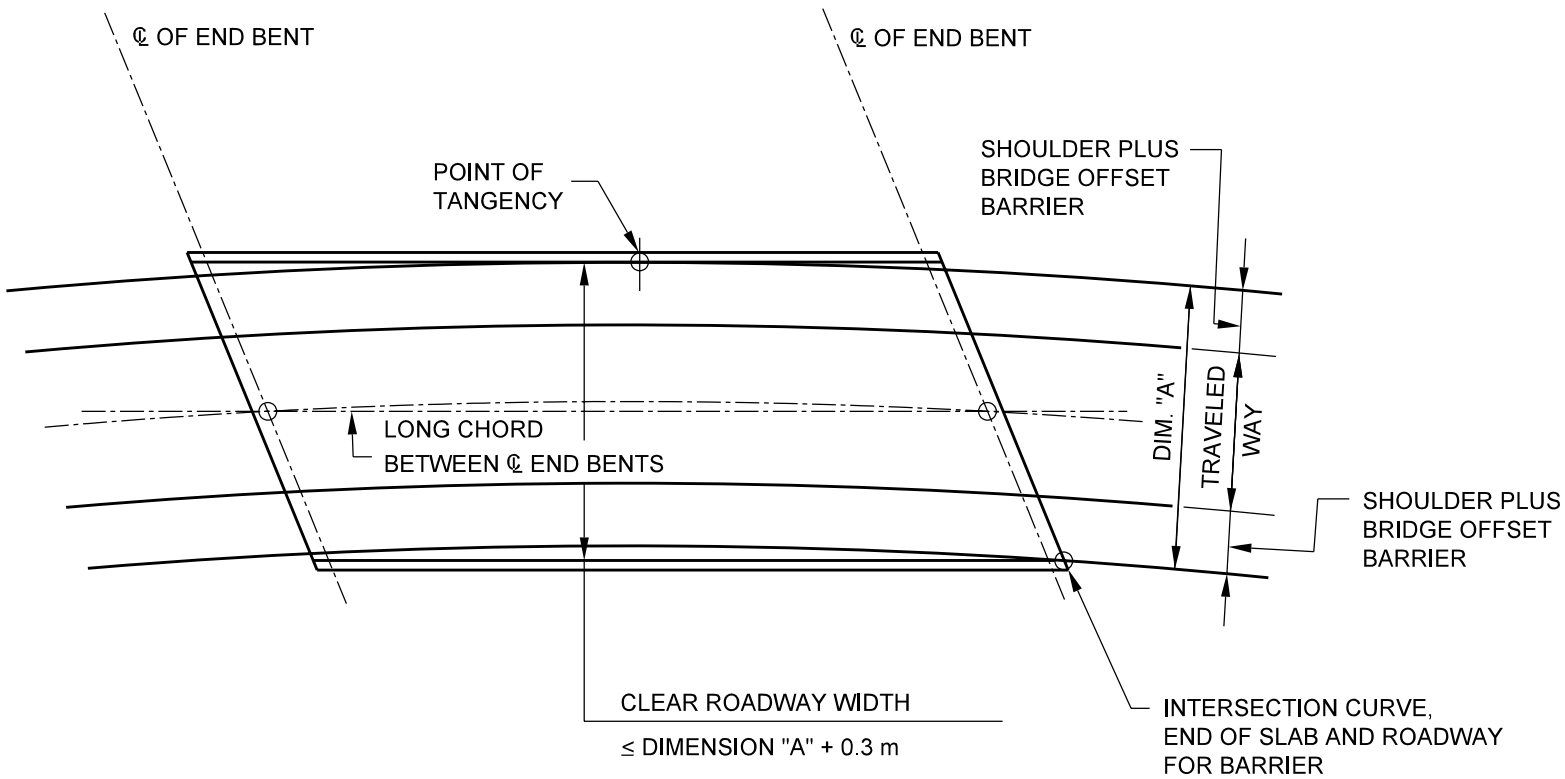

NOTE: SEE SECTION 59-1.01 FOR BRIDGE WIDTHS

BRIDGE WIDTH
(Flat/Short Horizontal Curves)

Figure 59-1 I

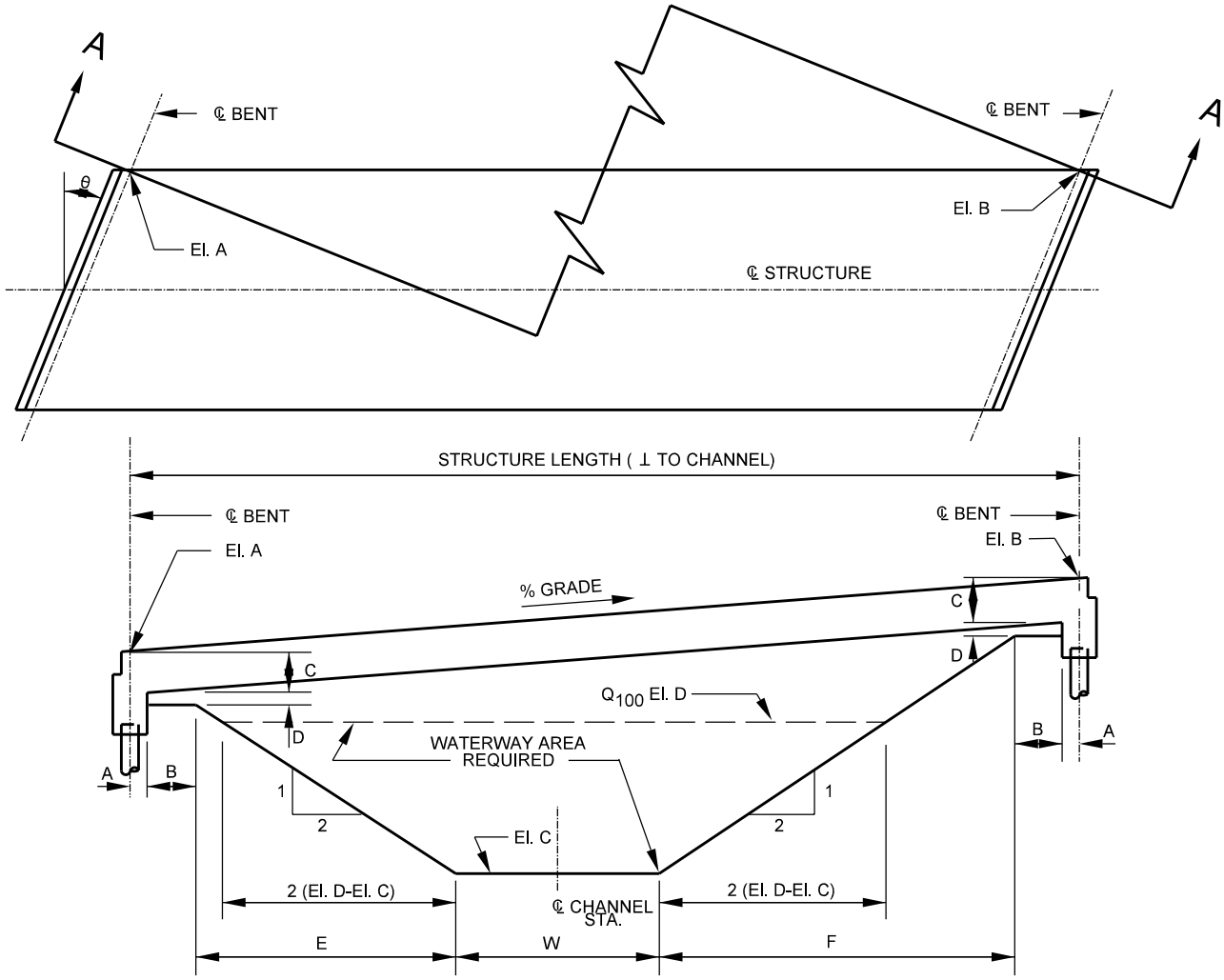

SECTION A-A

(PERPENDICULAR TO CHANNEL)

A = One half of the cap width
B = Width of berm
C = Anticipated thickness of reinforced concrete slab
D = Distance from bottom of slab to berm elevation
E = (2) (El. A - C - D - El. C)
F = (2) (El. B - C - D - El. C)
W = Width of channel (perpendicular to channel)
El. A = Elevation of top of slab
El. B = Elevation of top of slab
El. C = Bottom of channel elevation

Note: Waterway Area Required will be determined in the waterway opening analysis. Interior supports are not shown.

STRUCTURE LENGTH FOR STREAM CROSSING
(Reinforced Concrete Slab Structure)

Figure 59-1J

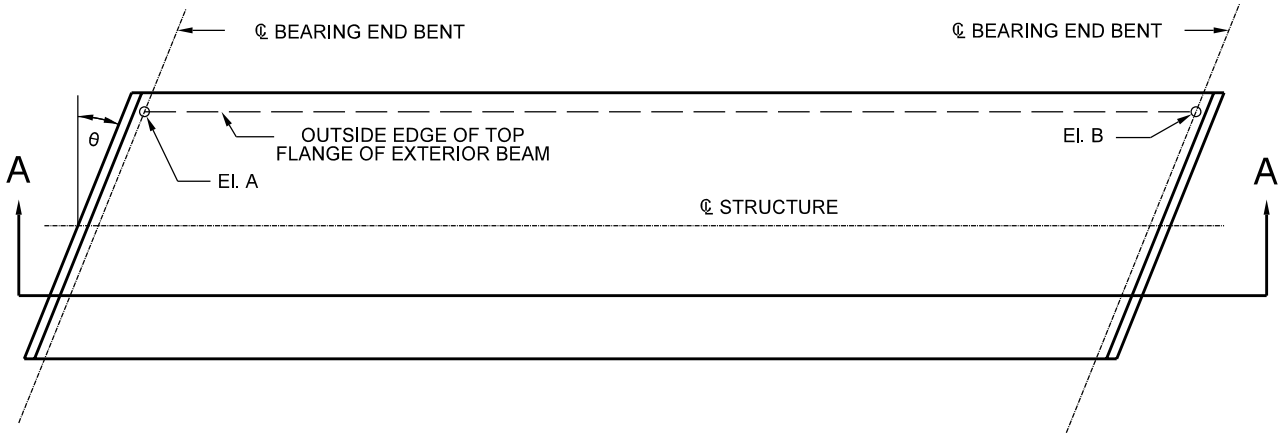

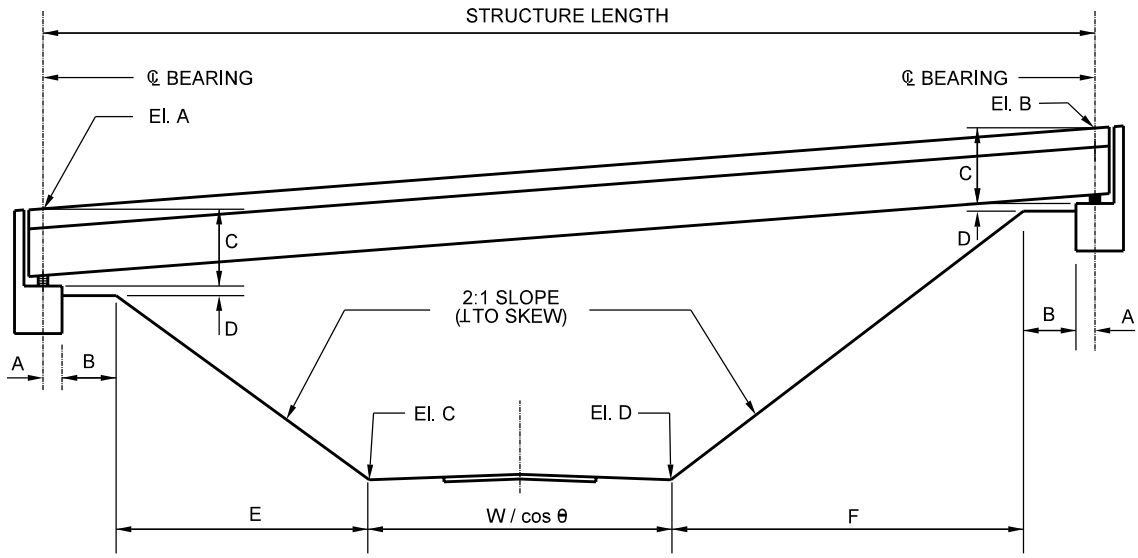

SECTION A-A

(PARALLEL TO ℄ STRUCTURE)

A = (Distance from bearing to front face of cap) / cos
B = (Width of berm) / cos
C = Construction depth plus height of bearing pad
D = Distance from top of cap to berm elevation
E = (2) (El. A - C - D - El. C) / cos
F = (2) (El. B - C - D - El. D) / cos
W = Width of traveled way plus width of obstruction-free or clear zone
El. A = Elevation of top of slab
El. B = Elevation of top of slab
El. C = Elevation of toe of slope
El. D = Elevation of toe of slope

Note: Interior supports are not shown.

STRUCTURE LENGTH FOR HIGHWAY CROSSING
(Beam Type Superstructure)

Figure 59-1K

STRUCTURE LENGTH FOR HIGHWAY CROSSINGS
(Beam Type Superstructures)

Figure 59-1K

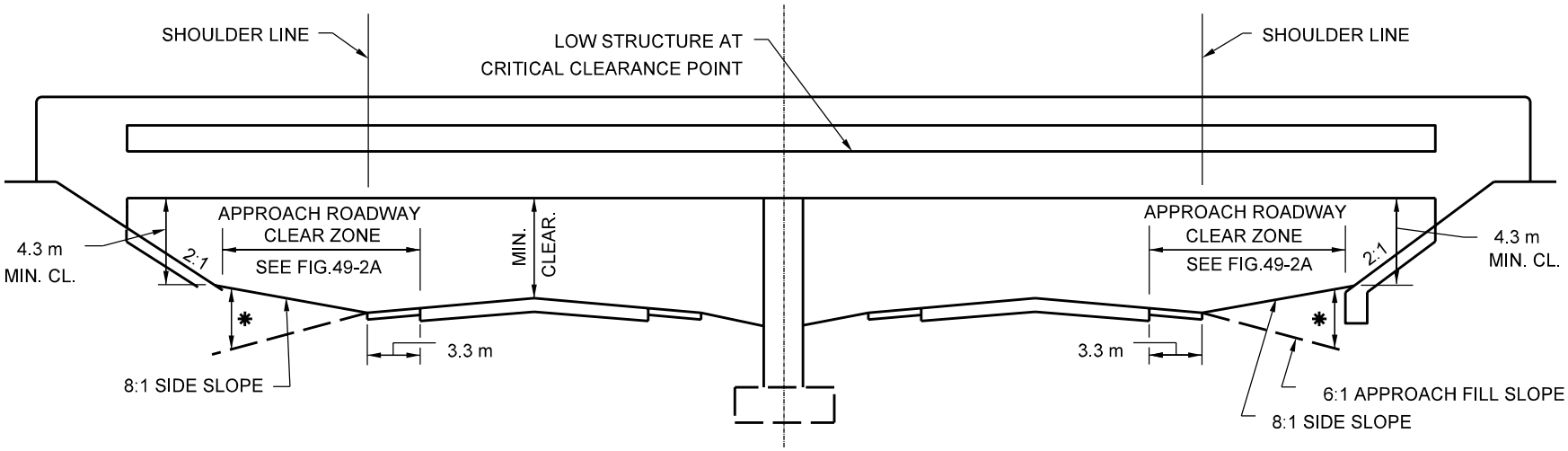

TANGENT SECTION

* SEE SECTION 49-3.05(03) FOR SPILLSLOPE TRANSITIONS.

NOTE: MEDIAN PIER PROTECTION SHOULD BE PROVIDED.

BRIDGE UNDERPASS CROSS SECTION
(New Construction/4R Project)

Figure 59-1L

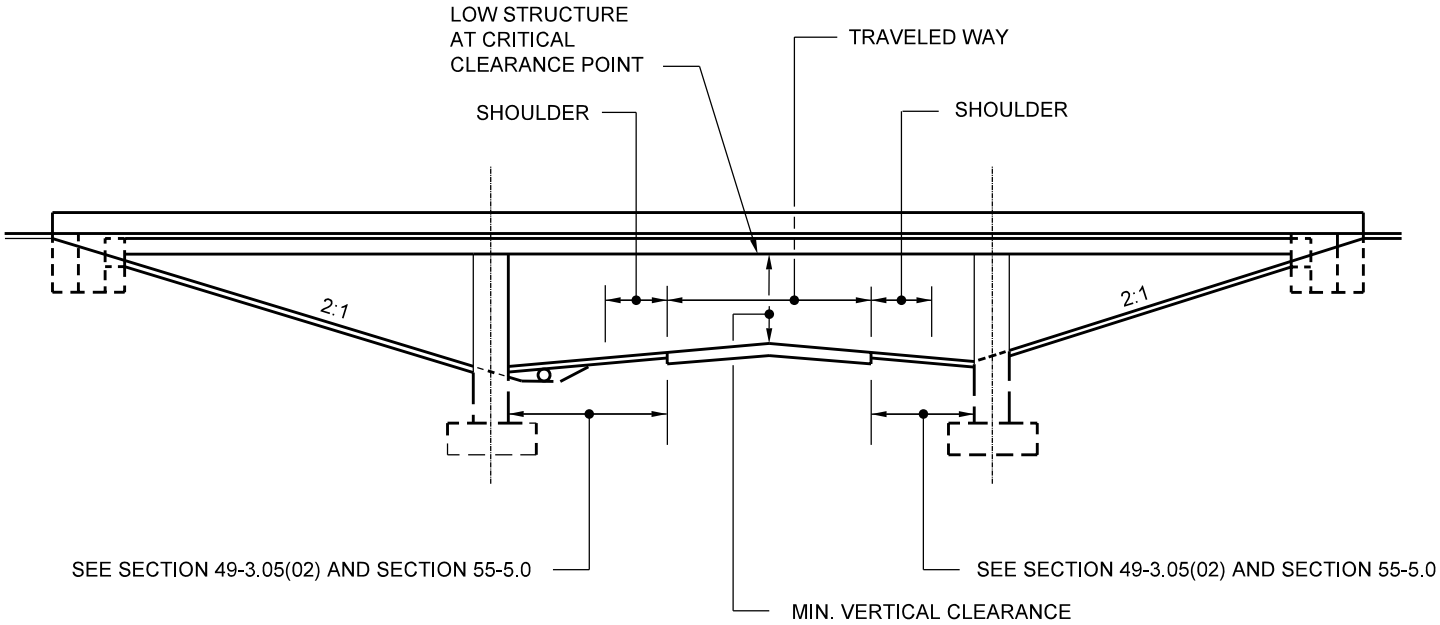

NEW BRIDGE UNDERPASS CROSS SECTION
(3R Project)

Figure 59-1M

Type	Minimum Vertical Clearance (m)
Freeway Under Roadway	5.05 (1) (2)
Arterial Under Roadway	5.05 (1) (3)
Collector Under Roadway	4.45 (1)
Local Under Roadway	4.45 (1)
Roadway Under Pedestrian Bridge	5.35 (1)
Railroad Under Roadway	7.00 (4)

Notes:

(1) Value allows 150 mm for future resurfacing.

(2) A 4.45-m clearance, which includes provision for future resurfacing, may be used in an urban area where an alternative freeway facility with a 4.90-m clearance is available.

(3) In a highly urbanized area, a minimum clearance of 4.45 m, which includes provision for future resurfacing, may be provided if there is at least one route available with a 4.90-m clearance.

(4) See Chapter Sixty-nine for additional information on railroad under roadway.

VERTICAL CLEARANCES

Figure 59-1N

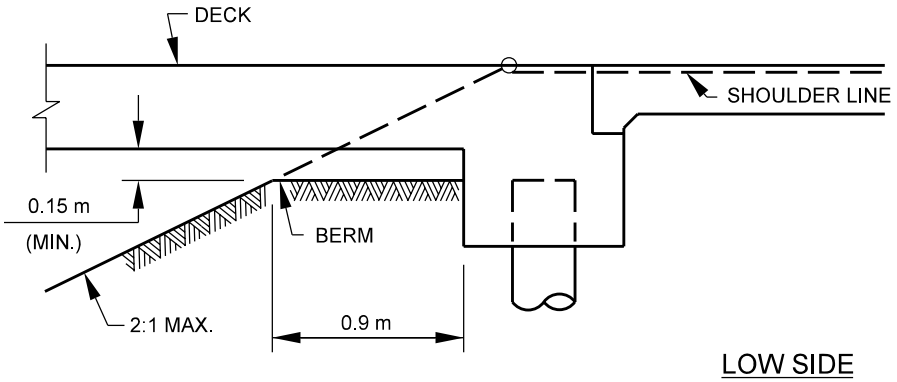

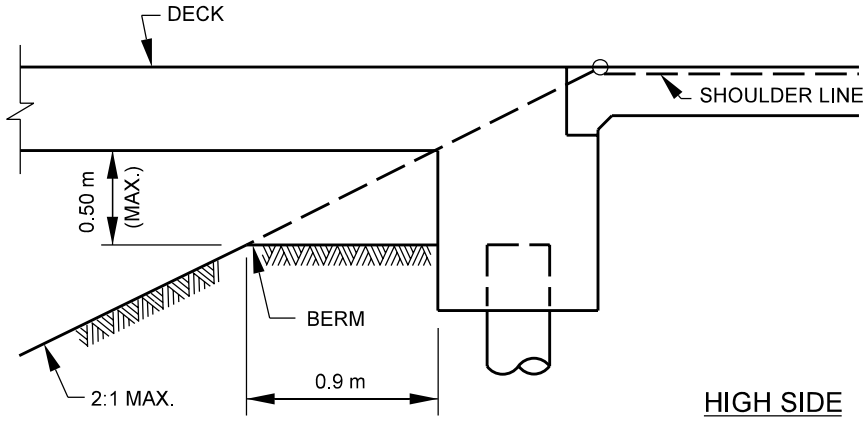

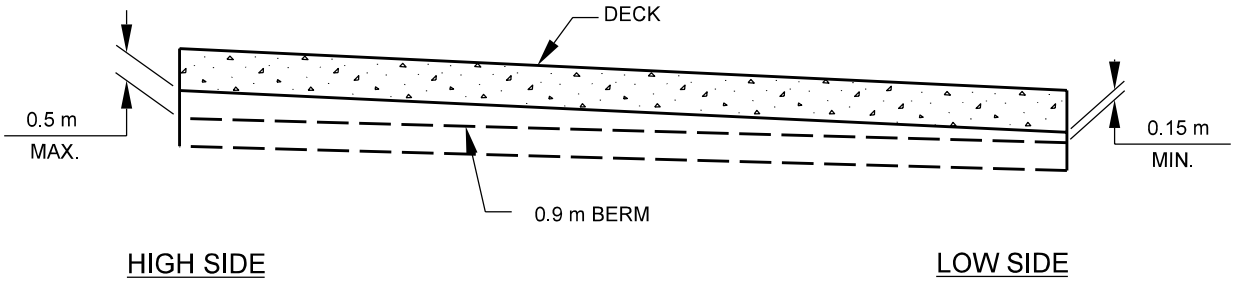

END BENT BERMS

Figure 59-1O

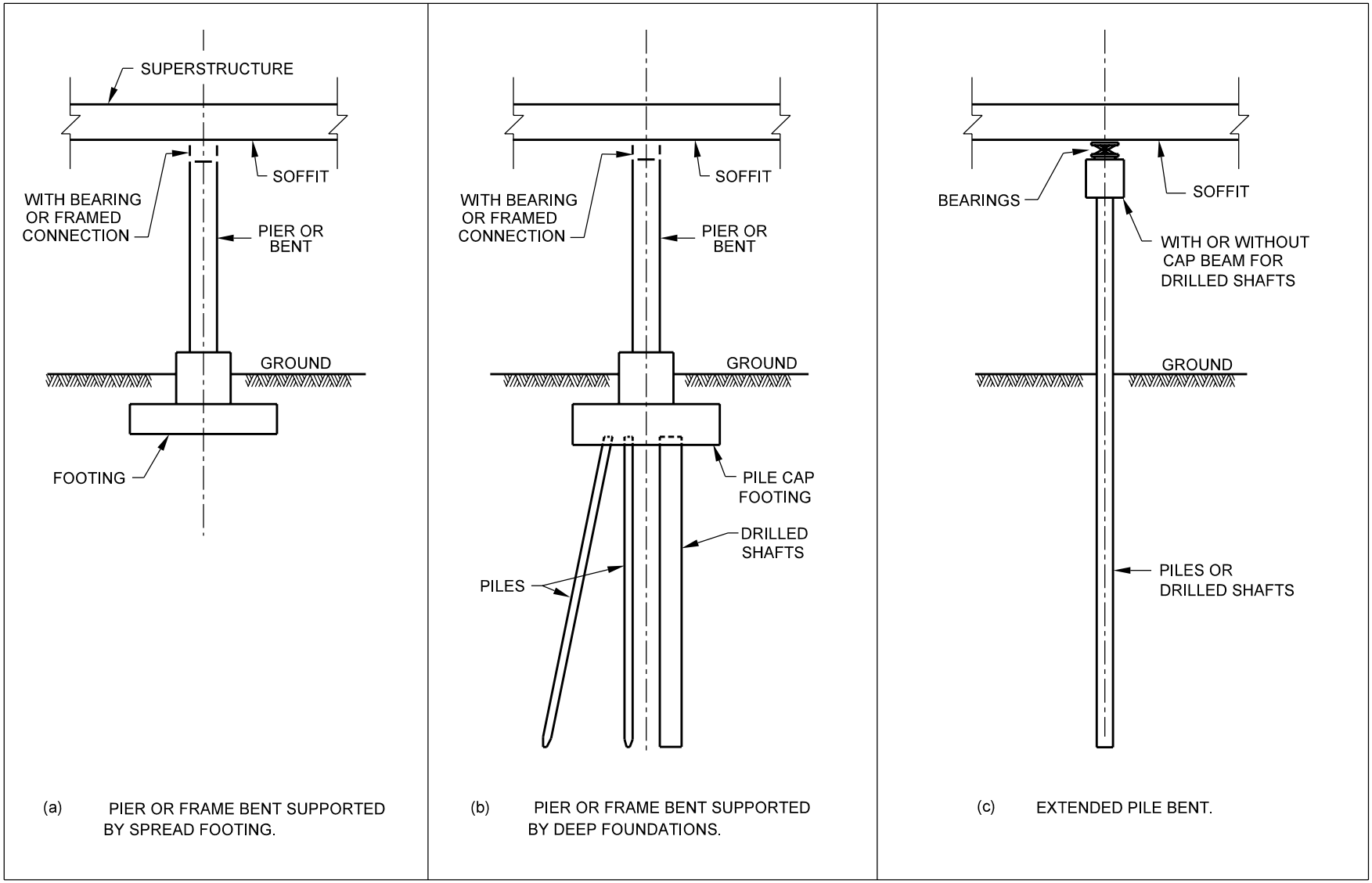

BASIC BENT TYPES

Figure 59-2A

Structure Type	Highway Alignment Across Bridge	Maximum Skew	Maximum Bridge Length	Maximum Distance to Zero Point
Reinforced Concrete Slab	No Restrictions	No Restrictions	60 m*	30 m
Structural Steel	Tangent Only**	30°***	75 m*	37.5 m
Prestressed Concrete	No Restrictions	30°***	90 m*	45.0 m

* *The maximum length indicated may be increased, subject to approval by the Design Division Chief, if a rational analysis of induced pile loads indicates that the piles are not overloaded. Two rational analysis methods are presented in the report,* Pile Design and Tests for Integral Abutment Bridges, *available from the Iowa Department of Transportation.*

See Section 67-1.03(03) for an alternative analysis in lieu of the above criteria.

** *The horizontal alignment may be curved if curved beams or girders are not used.*

*** *A greater skew than 30° and equal to or less than 45° will be permitted if the maximum bridge length does not exceed 45 m and the bridge is on a tangent alignment.*

USE OF INTEGRAL END BENTS

Figure 59-2B

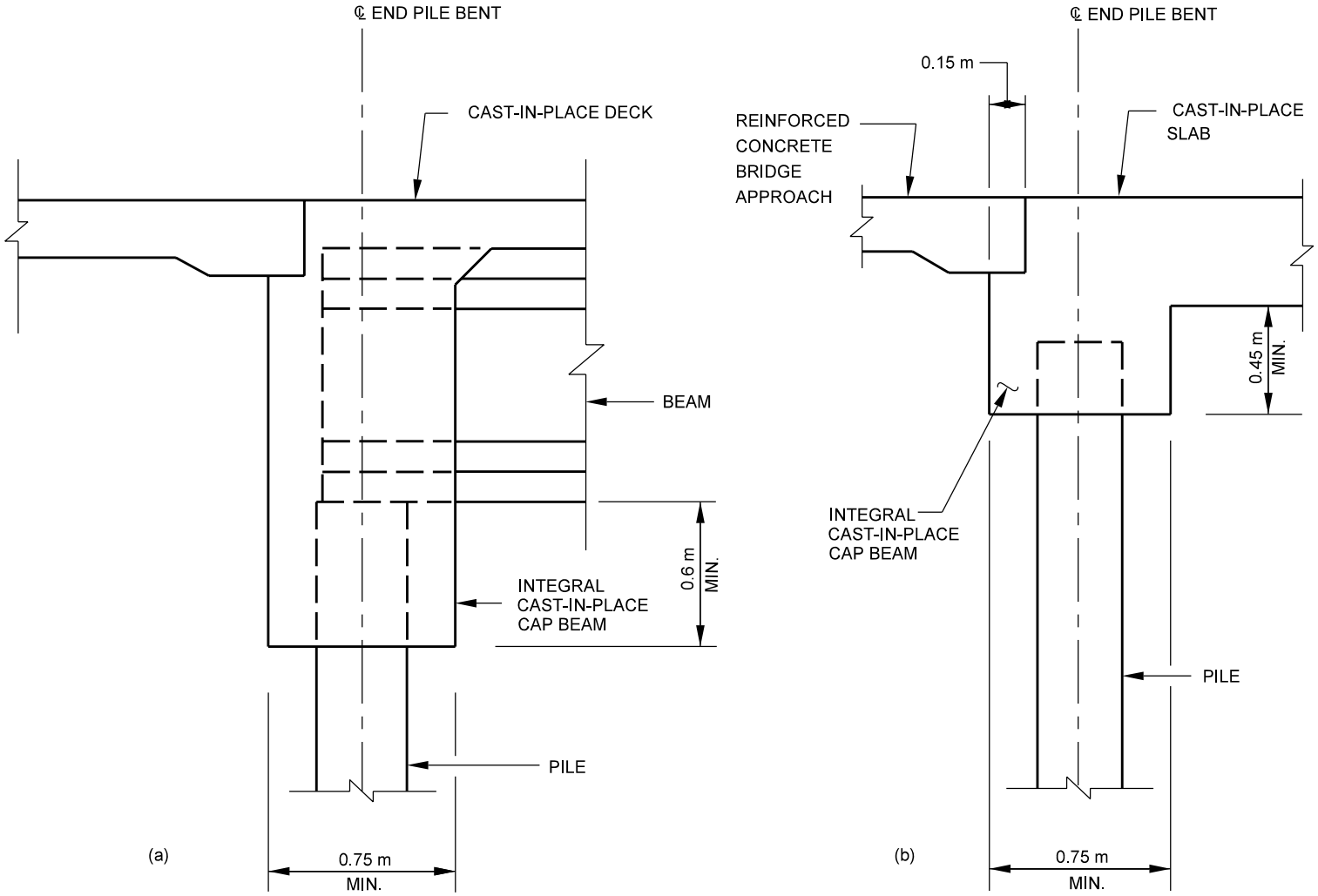

INTEGRAL END BENTS

Figure 59-2C

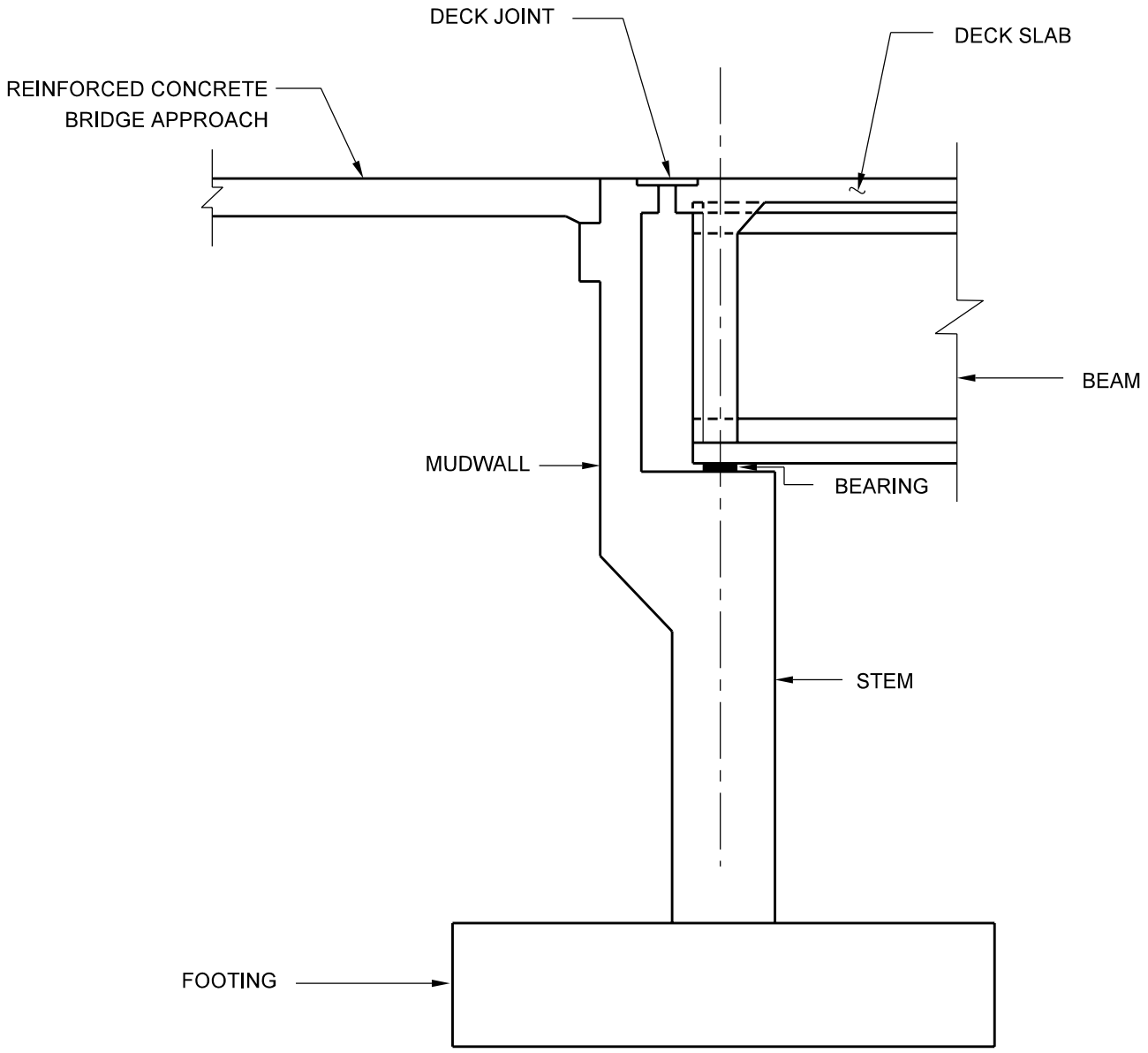

CANTILEVER ABUTMENT

Figure 59-2D

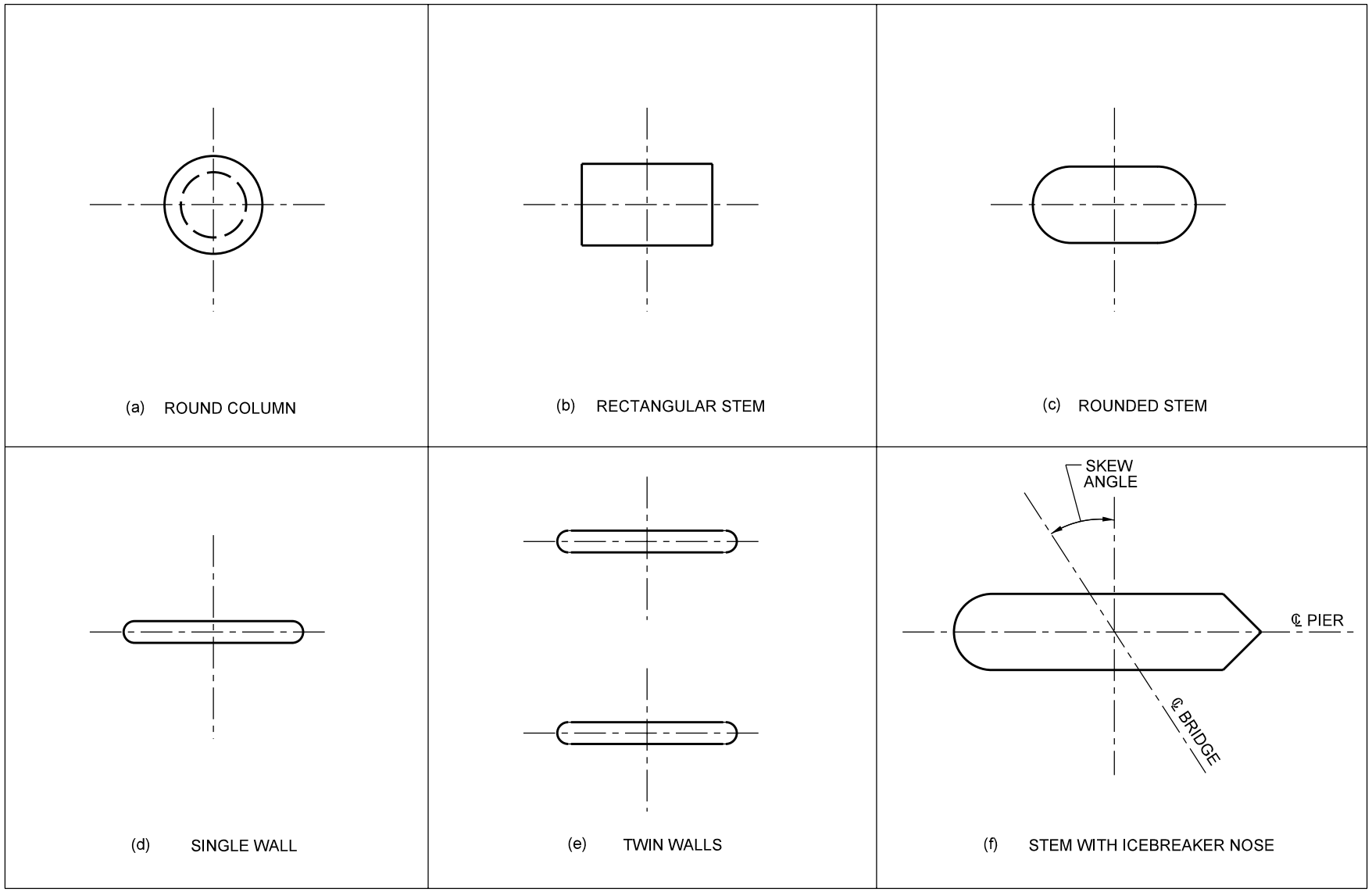

PIER STEAM AND COLUMN CONFIGURATION IN PLAN

Figure 59-2E

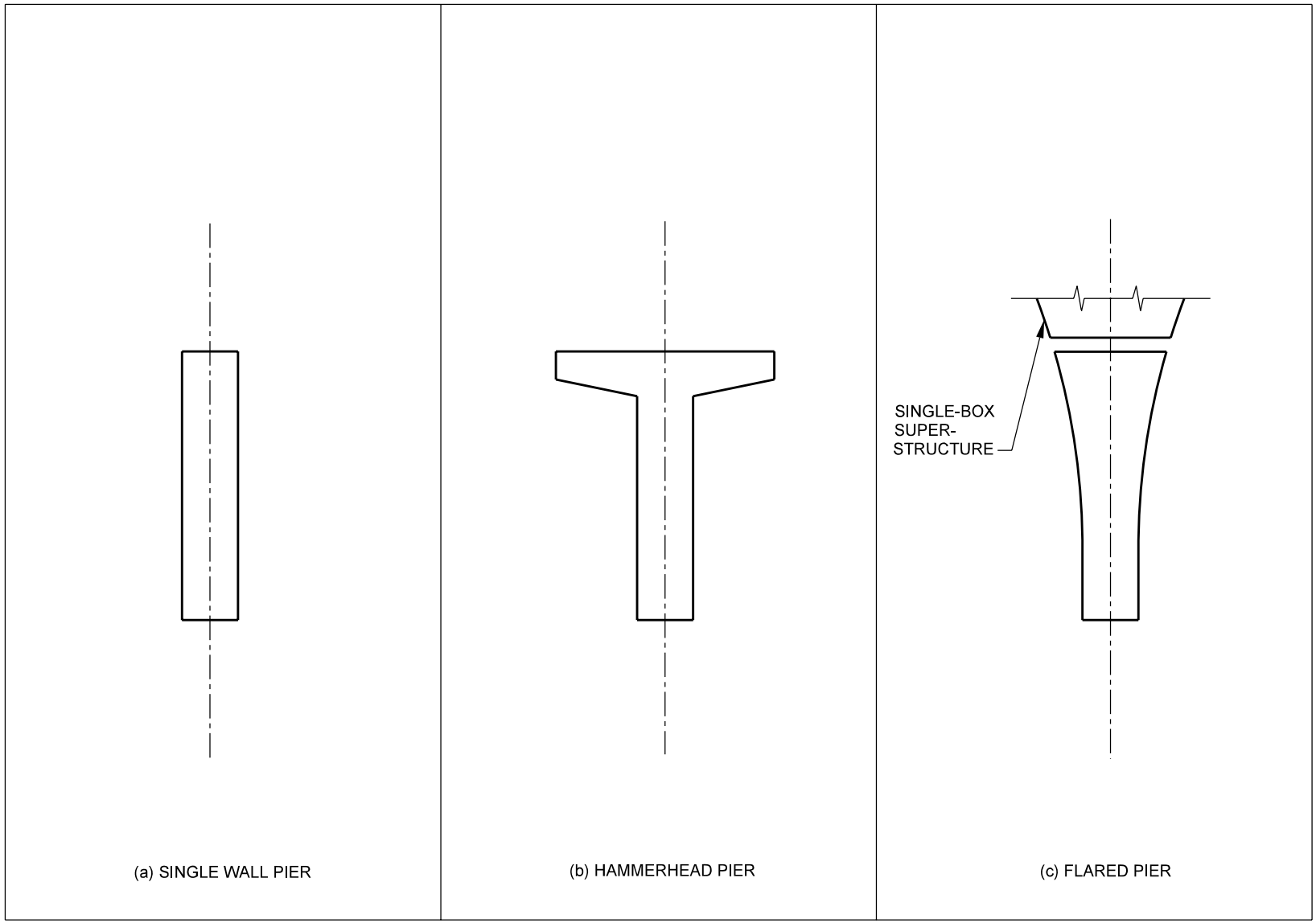

STEM TYPES FOR PIERS

Figure 59-2F

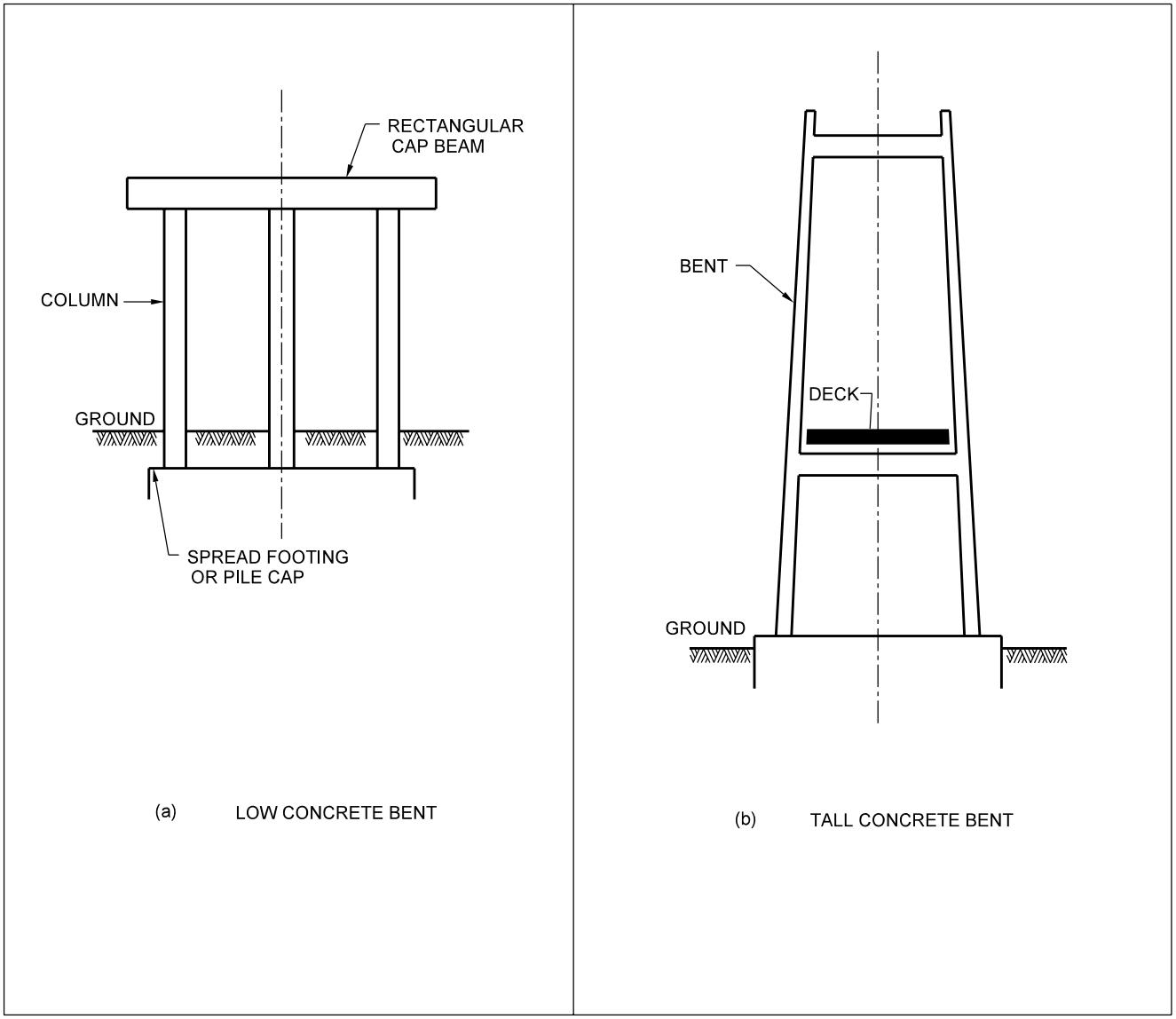

FRAME BENTS

Figure 59-2G

Type	Structure Description	Cross Section
A	Reinforced, Cast-in-Place Concrete Slab	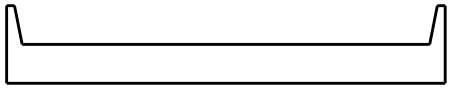
B	Longitudinally Post-Tensioned, Cast-In-Place Concrete Slab	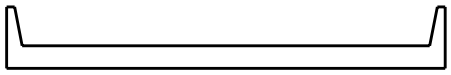
C	Longitudinally Post-Tensioned, Cast-In-Place Concrete Box Girders	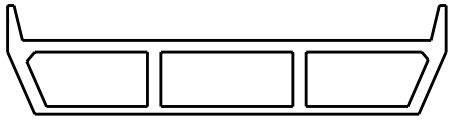
D1	Two-Way Post-Tensioned, Cast-In-Place, Solid Concrete Spine-Beam with Cantilevers	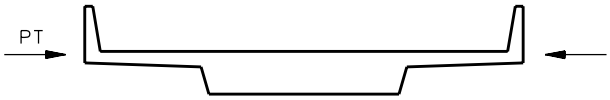
D2	Two-Way Post-Tensioned, Cast-In-Place, Voided Concrete Spine-Beam with Cantilevers	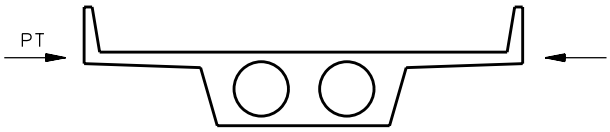
E1	Prestressed Precast Concrete I-Beams and Bulb-Tees	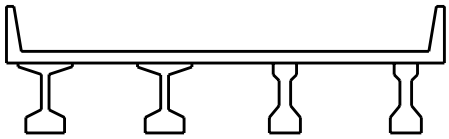
E2	Prestressed Precast Concrete Open or Closed Box Beams	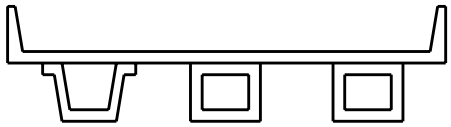

SUPERSTRUCTURE TYPES
Figure 59-3A
(Page 1 of 3)

Type	Structure Description	Cross Section
F	Post-Tensioned Concrete Bulb-Tee Beams	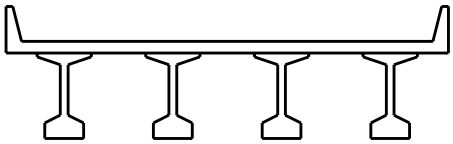
G1	Jointed, Prestressed, Precast Longitudinal Concrete Single Tees	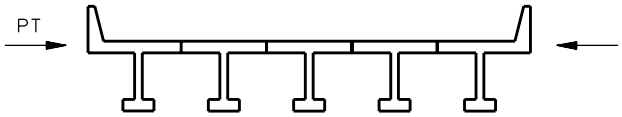
G2	Jointed, Prestressed, Precast Longitudinal Concrete Double Tees	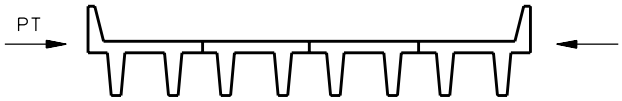
G3	Jointed, Prestressed, Precast Longitudinal Concrete Boxes	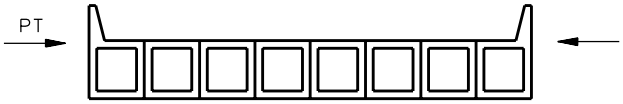
G4	Jointed, Prestressed, Precast Longitudinal Concrete Slabs	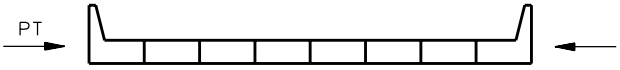
H	Segmental Concrete Box Girders	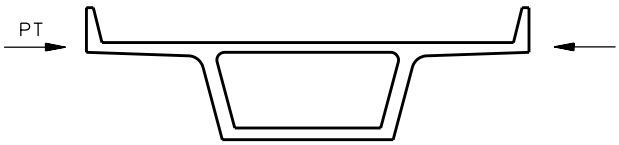
I	Composite Steel Rolled Beams	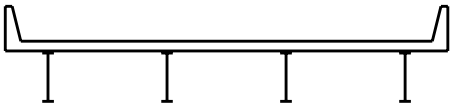

SUPERSTRUCTURE TYPES
Figure 59-3A
(Page 2 of 3)

Type	Structure Description	Cross Section
J	Composite Steel Plate Girders	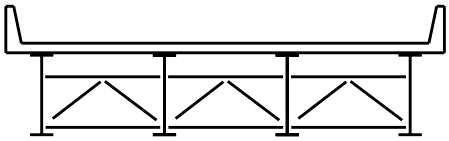
K	Composite Steel Boxes	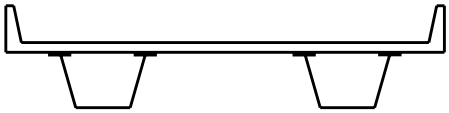
L1	Wood Panel Decks with Spreader Beams	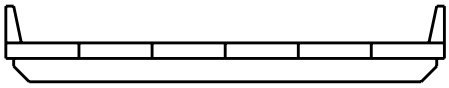
L2	Stressed Wood Decks: Plain Ribbed Boxed	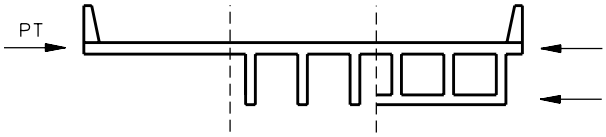
L3	Composite Native Wood Stringers	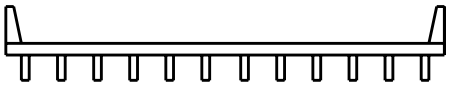
L4	Glulam Beams	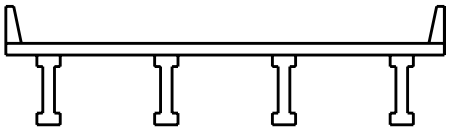
M	Structure Under Fill	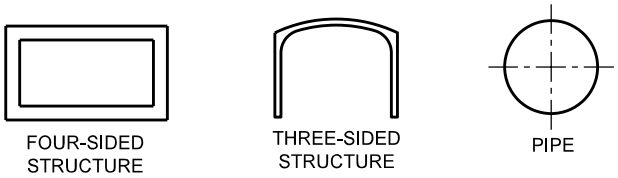

SUPERSTRUCTURE TYPES
Figure 59-3A
(Page 3 of 3)

Type	Structure Description	Subgroup	Ranges (m)				
			<10	10≤L <30	30≤L <50	50≤L <100	≥100
A	Reinforced, Cast-in-Place Concrete Slab	Straight	X				
		Haunched		X			
B	Longitudinally Post-Tensioned, Cast-in-Place Concrete Slab	Straight	X	X			
		Haunched		X	X		
C	Longitudinally Post-Tensioned, Cast-in-Place Concrete Box Girder	n/a			X	X	
D	Two-Way Post-Tensioned, Cast-in-Place Concrete Spine-Beams with Cantilevers	1. Solid		X			
		2. Voided		X	X		
E	Prestressed, Precast Concrete Beams	1. I-Beams		X			
		2. Bulb-Tee Beams			X		
		3. Boxes		X			
F	Post-Tensioned, Bulb-Tee Beams	Straight			X		
		Haunched				X	
G	Jointed Prestressed Precast Longitudinal Concrete Elements	1. Single Tees		X			
		2. Double Tees		X			
		3. Boxes		X			
		4. Solid Slabs	X				
H	Segmental Concrete Box Girders	n/a			X	X	X
I	Composite Steel Rolled Beams	n/a		X	X		
J	Composite Steel Plate Girders	n/a			X	X	X
K	Composite Steel Box Girders	n/a		X	X	X	X
L	Wood Structure	1. Panel Deck	X	X			
		2. Stressed Deck	X				
		3. Stringers	X				
		4. Glulam Beams		X			
M	Structure Under Fill	n/a	X				

SPAN LENGTHS

Figure 59-3B

Type	Structure Description	Subgroup	For Skew	For Horiz. Curve	Aes-thetics	False-work	Speed of Construction	Maintenance	Widening
A	Reinforced, cast-in-place concrete slab	Straight	Good	Good	OK	Yes	Slow	Good	OK
		Haunched	Good	Good	Good	Yes	Slow	Good	OK
B	Longitudinally post-tensioned cast-in-place concrete slab	Straight	Good	Good	OK	Yes	Slow	Good	OK
		Haunched	Good	Good	Good	Yes	Slow	Good	OK
C	Longitudinally post-tensioned cast-in-place concrete box girders	N/A	OK	OK	Good	Yes	Slow	Good	No
D	2-way post-tensioned, cast-in-place concrete spine-bms. with cantilevers	1. Solid	Good	Good	Good	Yes	Slow	Good	No
		2. Voided	Good	Good	Good	Yes	Slow	Good	No
E	Prestressed precast concrete beams	1. I-Bms, Bulb-Ts	OK	Poor	OK	No	OK	Good	OK
		2. Boxes	OK	Poor	OK	No	OK	Good	OK
F	Post-tensioned bulb-tee beams	Straight	OK	No	OK	No	OK	Good	OK
		Haunched	OK	No	Good	No	OK	Good	OK
G	Jointed prestressed precast longitudinal concrete elements	1. Single tees	OK	Poor	OK	No	Good	Good	Good
		2. Double tees	OK	Poor	OK	No	Good	Good	Good
		3. Boxes	OK	Poor	OK	No	Good	Good	Good
		4. Solid slab	OK	Poor	OK	No	Good	Good	Good
H	Segmental concrete box girders	N/A	No	OK	OK	Yes/No	Good	Good	No
I	Composite steel rolled beams	N/A	OK	OK	OK	No	OK	Expensive*	OK
J	Composite steel plate girders	N/A	OK	Good	OK	No	OK	Expensive*	OK
K	Composite steel box girders	N/A	OK	Good	Good	No	OK	Expensive*	OK
L	Wood structure	1. Panel deck	Good	No	OK	No	Good	OK	Good
		2. Stressed deck	Good	Poor	OK	No	Good	OK	Good
		3. Stringers	Good	No	OK	No	Good	OK	OK
		4. Glulam beams	Good	No	OK	No	Good	OK	OK
M	Structure under fill	N/A	OK	Good	OK	No	Good	Good	Good

** Expensive if painted. Good if unpainted.*

SUPERSTRUCTURE CHARACTERISTICS

Figure 59-3C

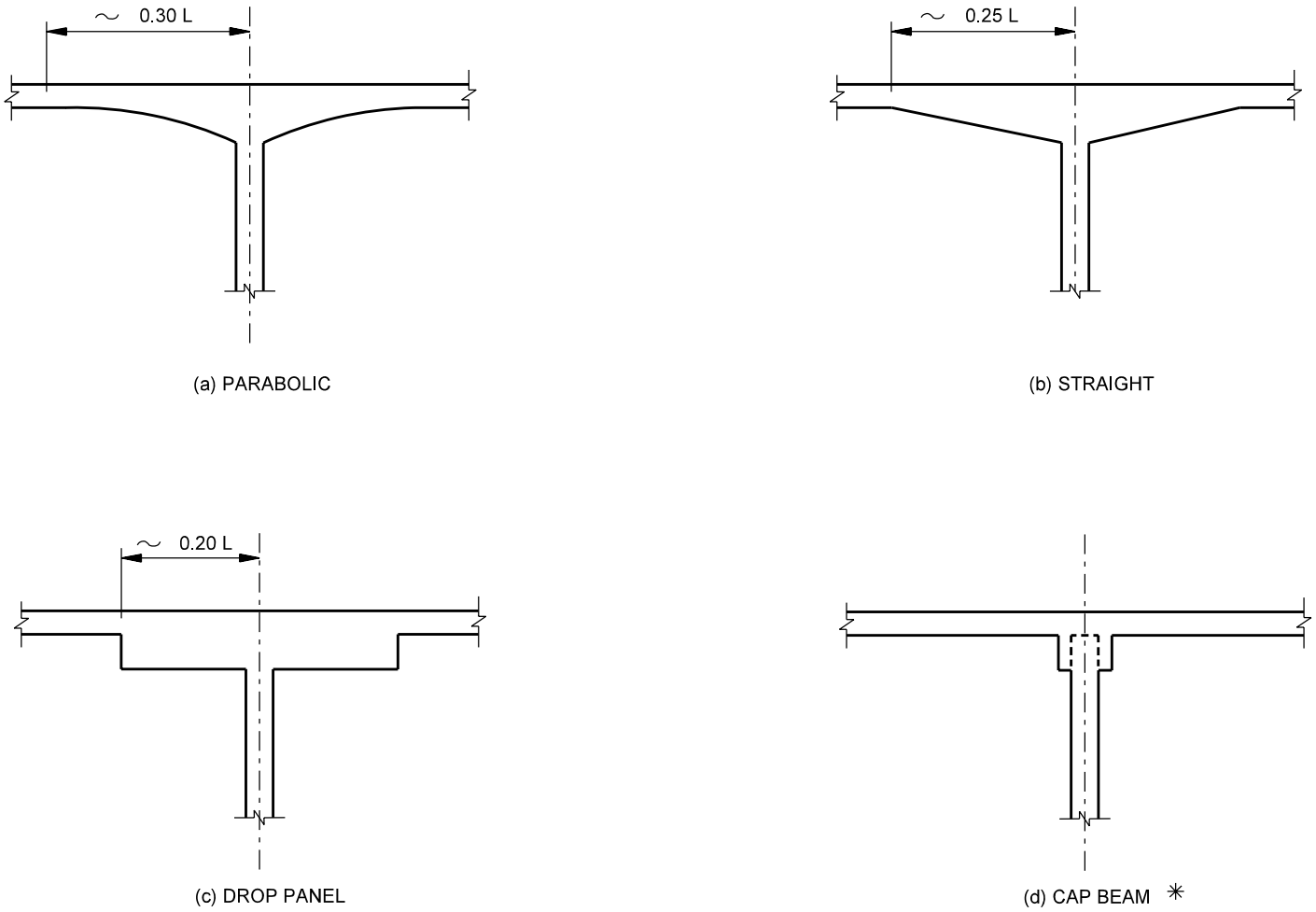

✳ THIS CONFIGURATION SHOULD NOT BE USED AS A STRUCTURAL HAUNCH

HAUNCH CONFIGURATIONS FOR REINFORCED CONCRETE SLAB BRIDGE

Figure 59-3D

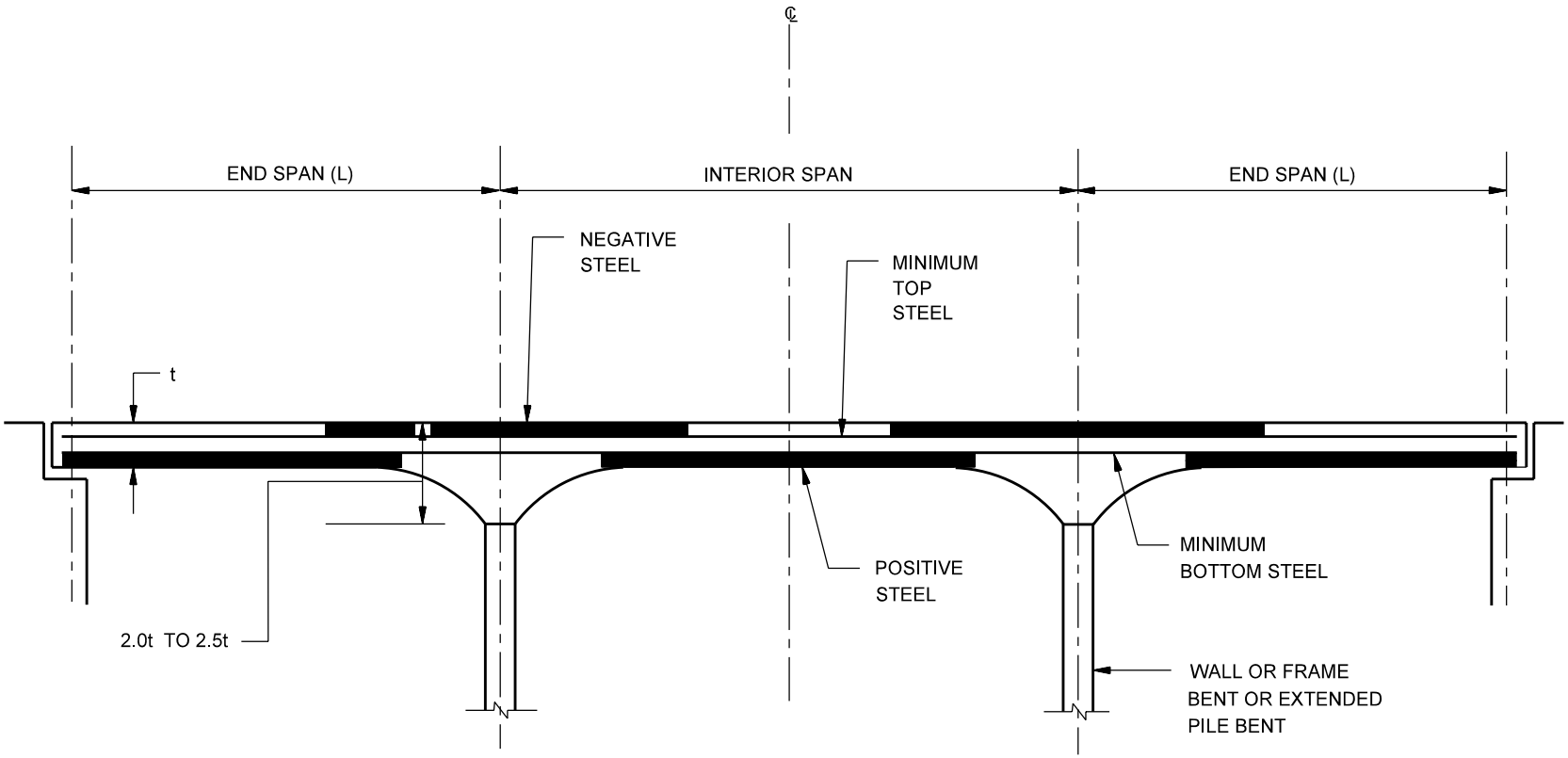

ELEVATION

TYPICAL REINFORCED CONCRETE SLAB DECK (Type "A")

Figure 59-3E

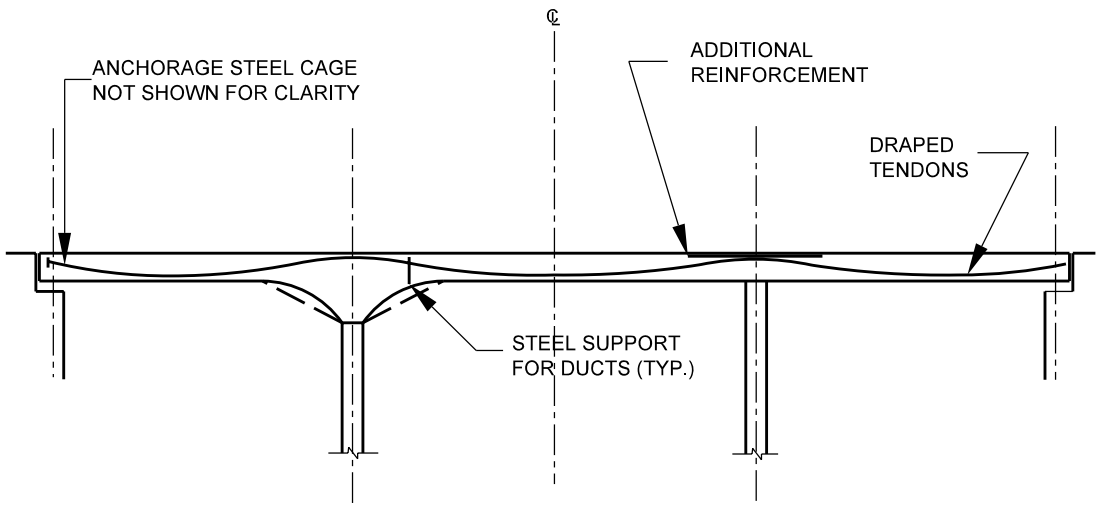

ELEVATION

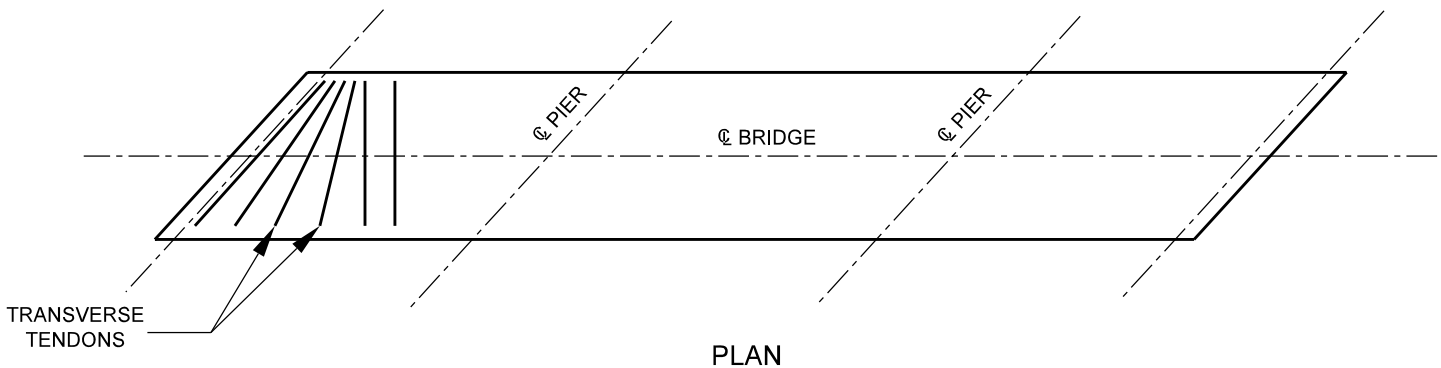

PLAN

RECTANGULAR, SKEWED AND/OR CURVED LAYOUT

TYPICAL POST-TENSIONED CONCRETE SLAB (Type "B")

Figure 59-3F

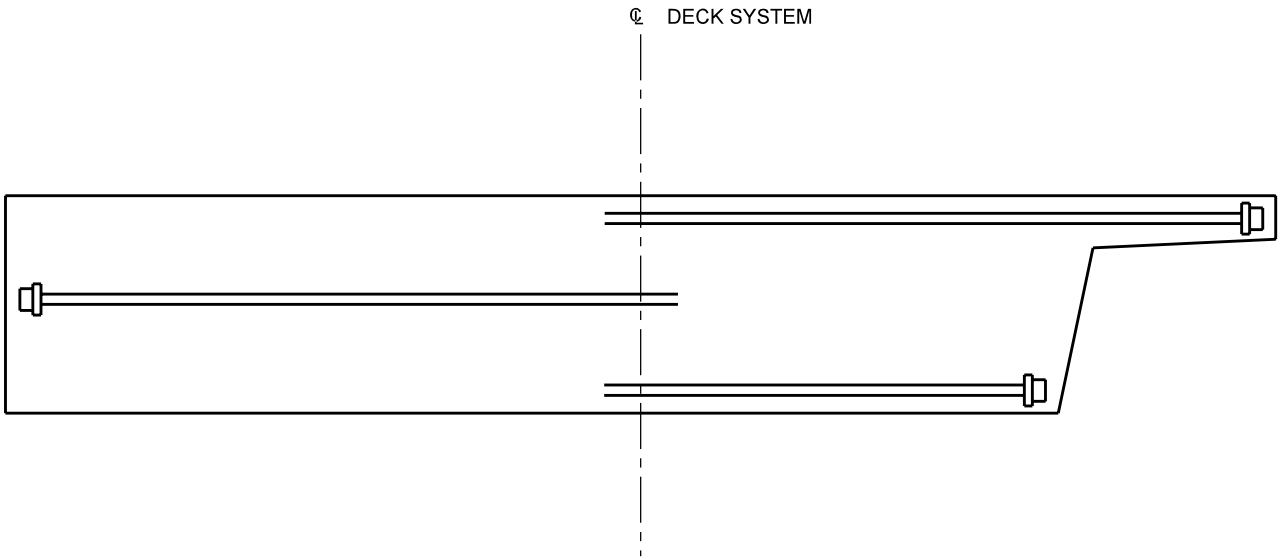

ALTERNATIVES FOR TRANSVERSE POST-TENSIONING (Type B)

Figure 59-3G

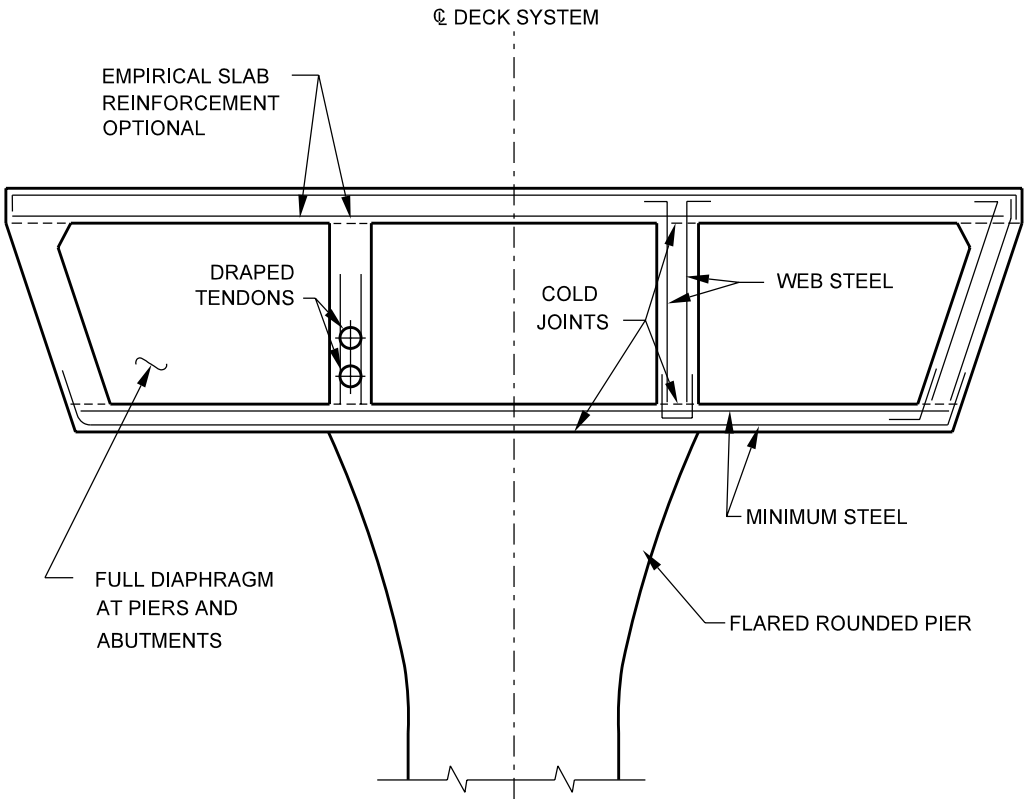

CALIFORNIA-TYPE BOX GIRDER (Type C)

Figure 59-3H

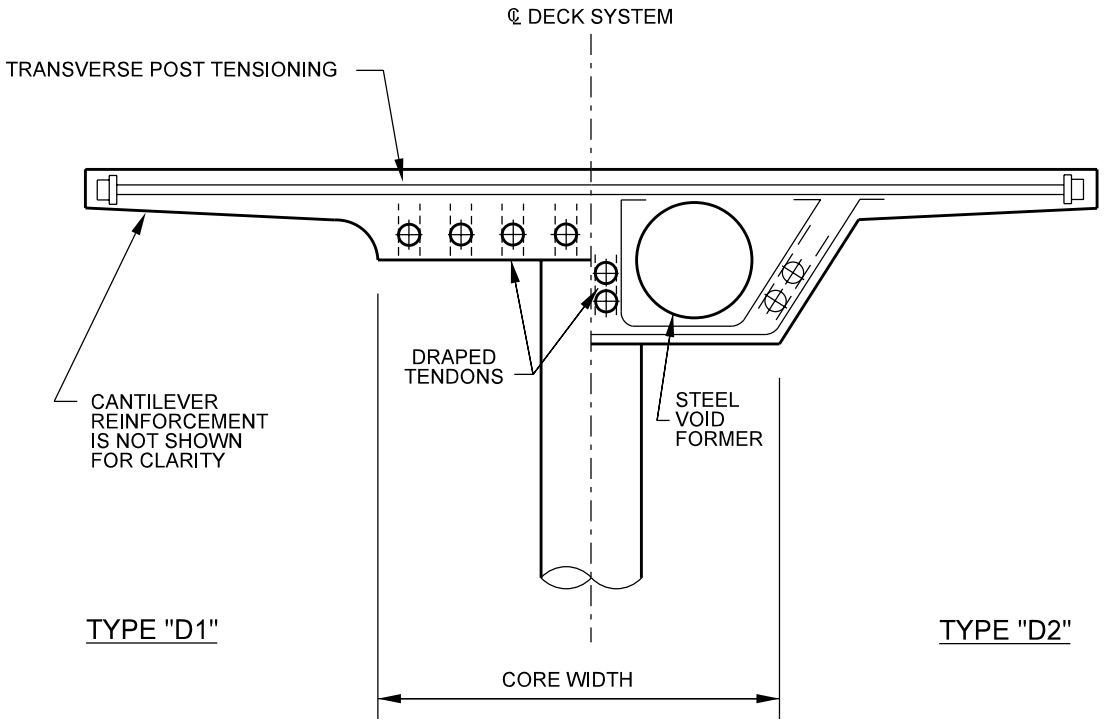

TWO-WAY POST-TENSIONED CAST-IN-PLACE
CONCRETE SPINE-BEAM WITH CANTILEVER
(Type D)

Figure 59-3I

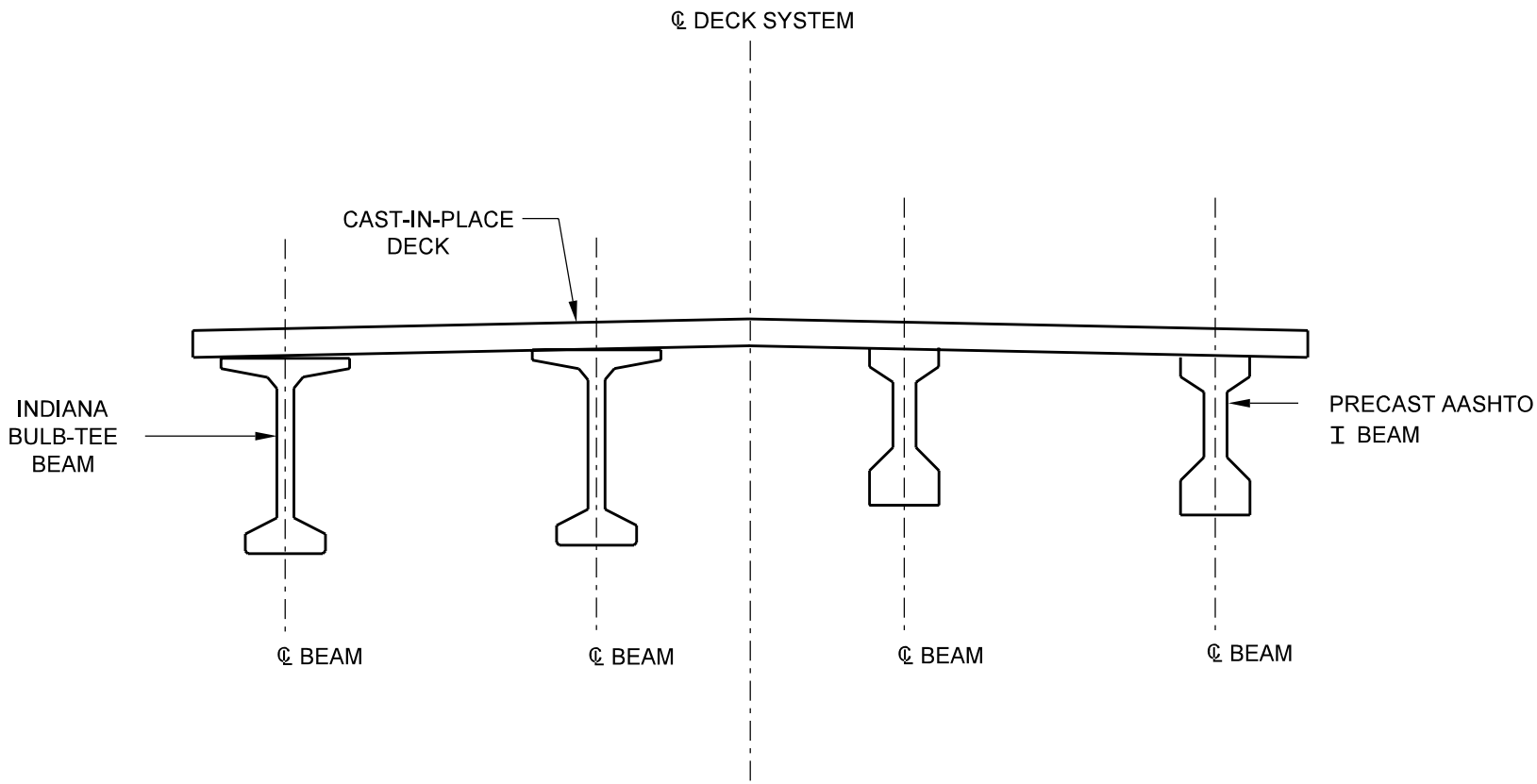

COMPOSITE DECK WITH PRESTRESSED, PRECAST BEAMS
(Type E1)

Figure 59-3J

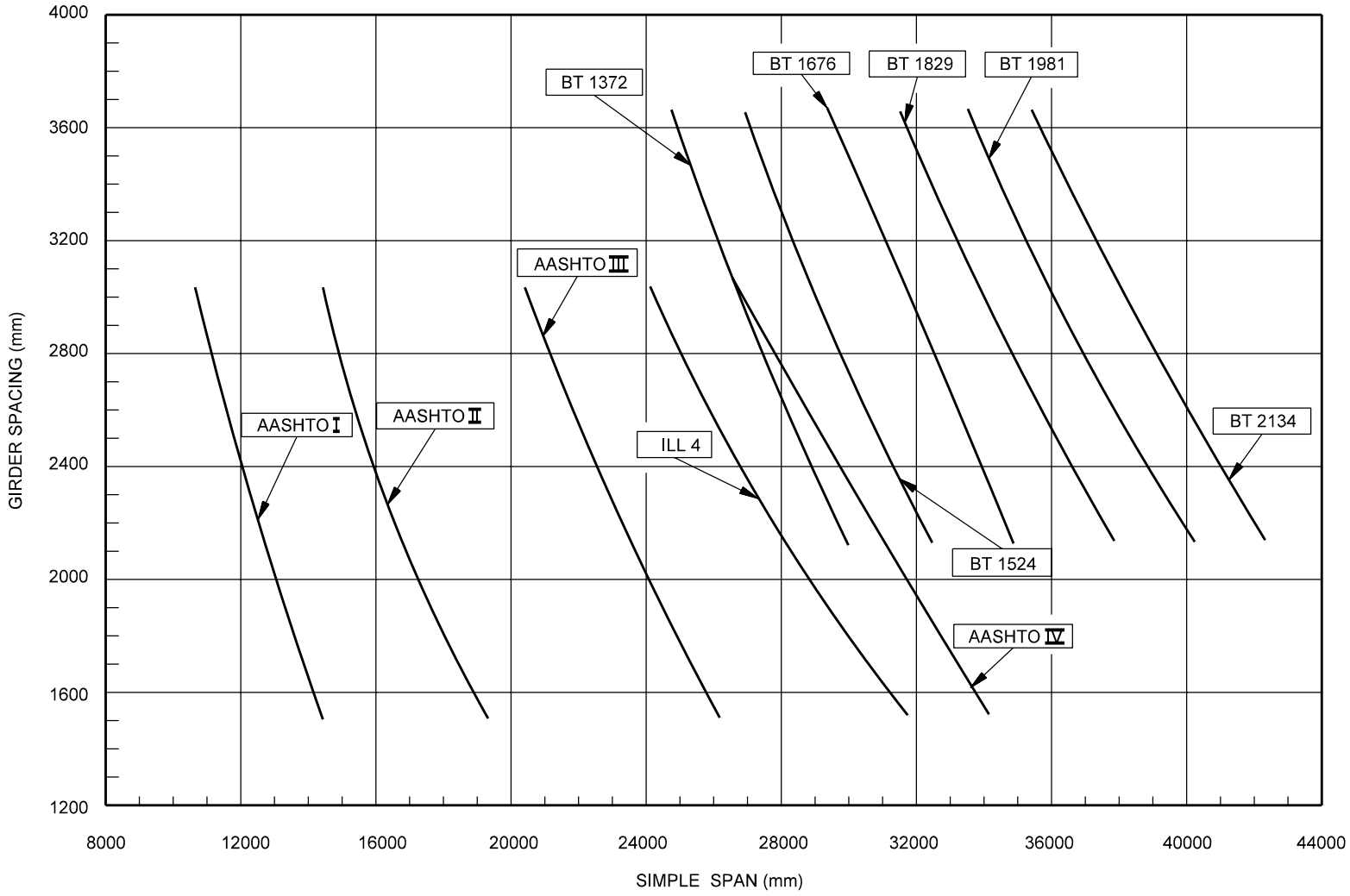

PRESTRESSED CONCRETE I-BEAM SELECTION CHART

Figure 59-3K

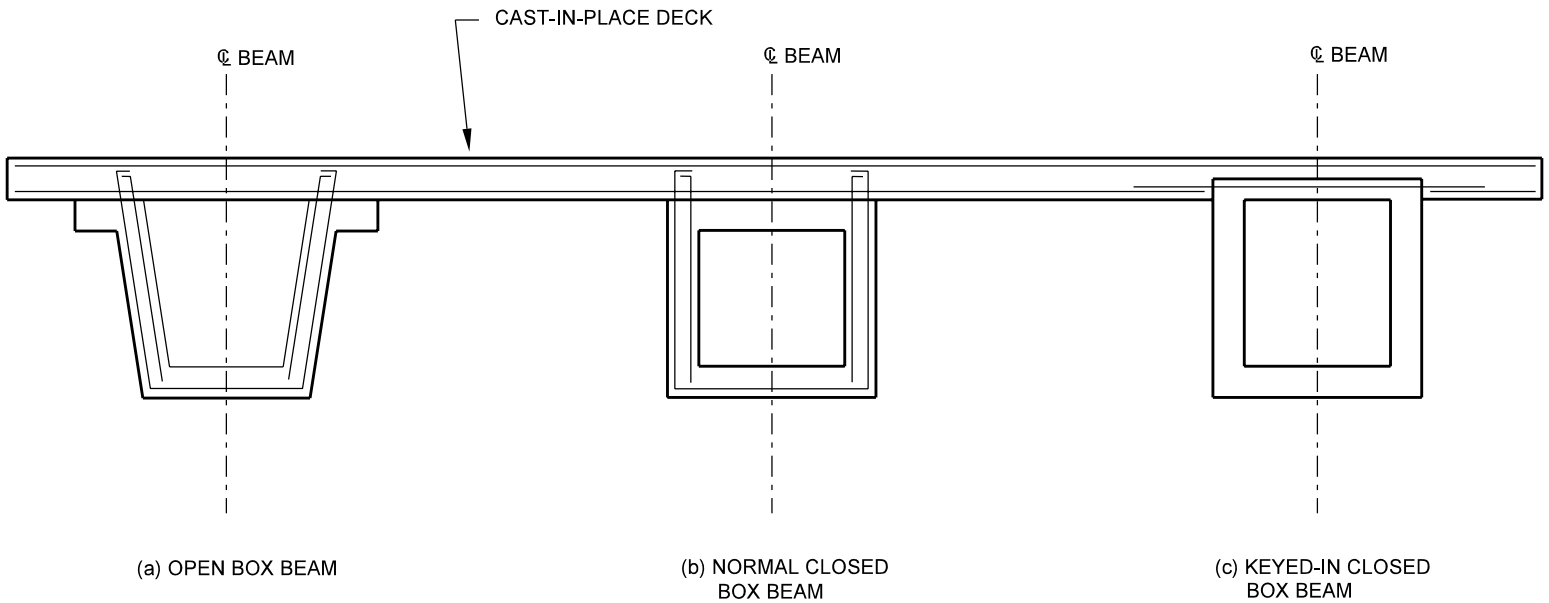

COMPOSITE DECK WITH PRESTRESSED, PRECAST BOX BEAMS (Type E2)

Figure 59-3L

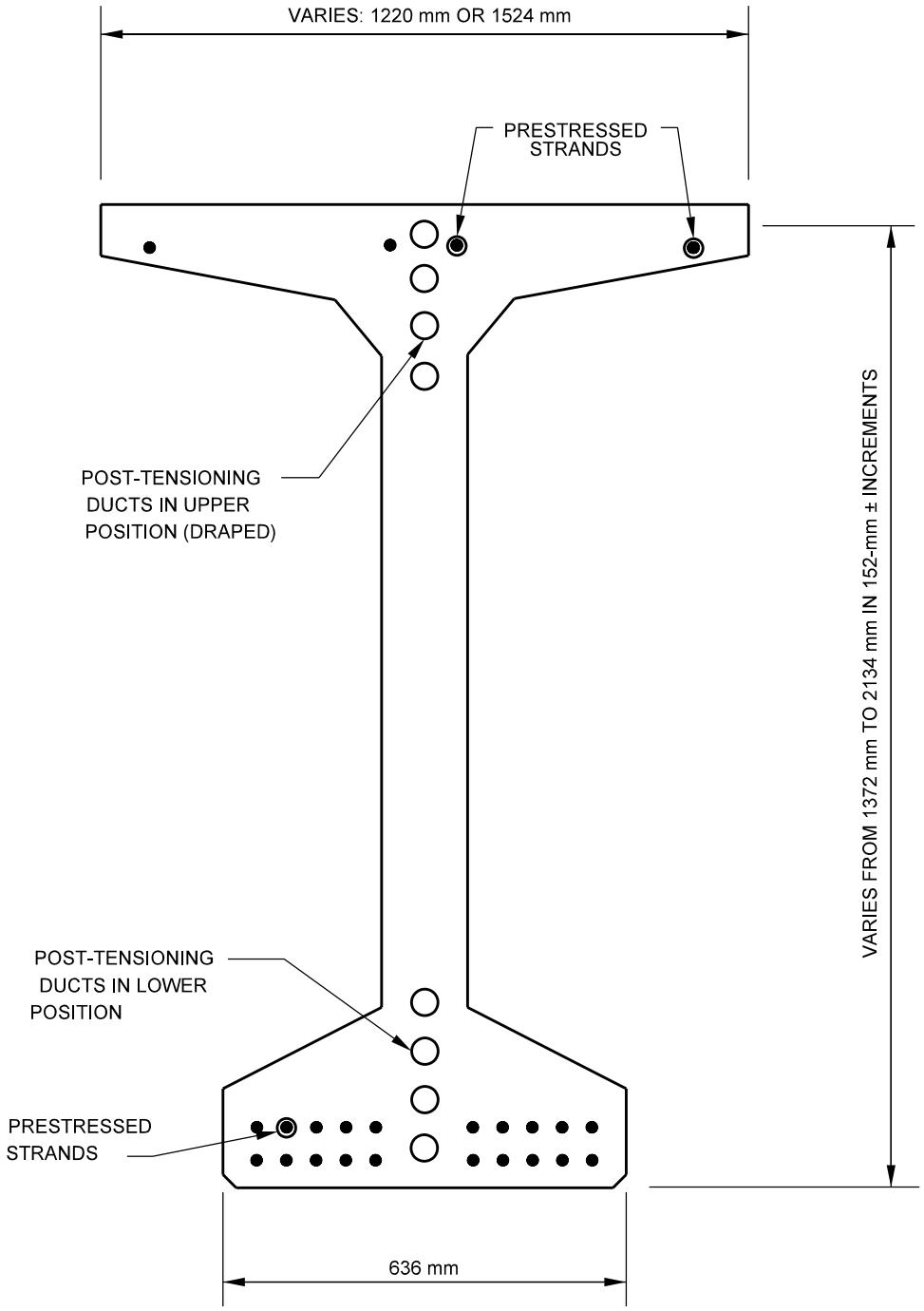

INDIANA BULB-TEE BEAM (TYPE F)

Figure 59-3M

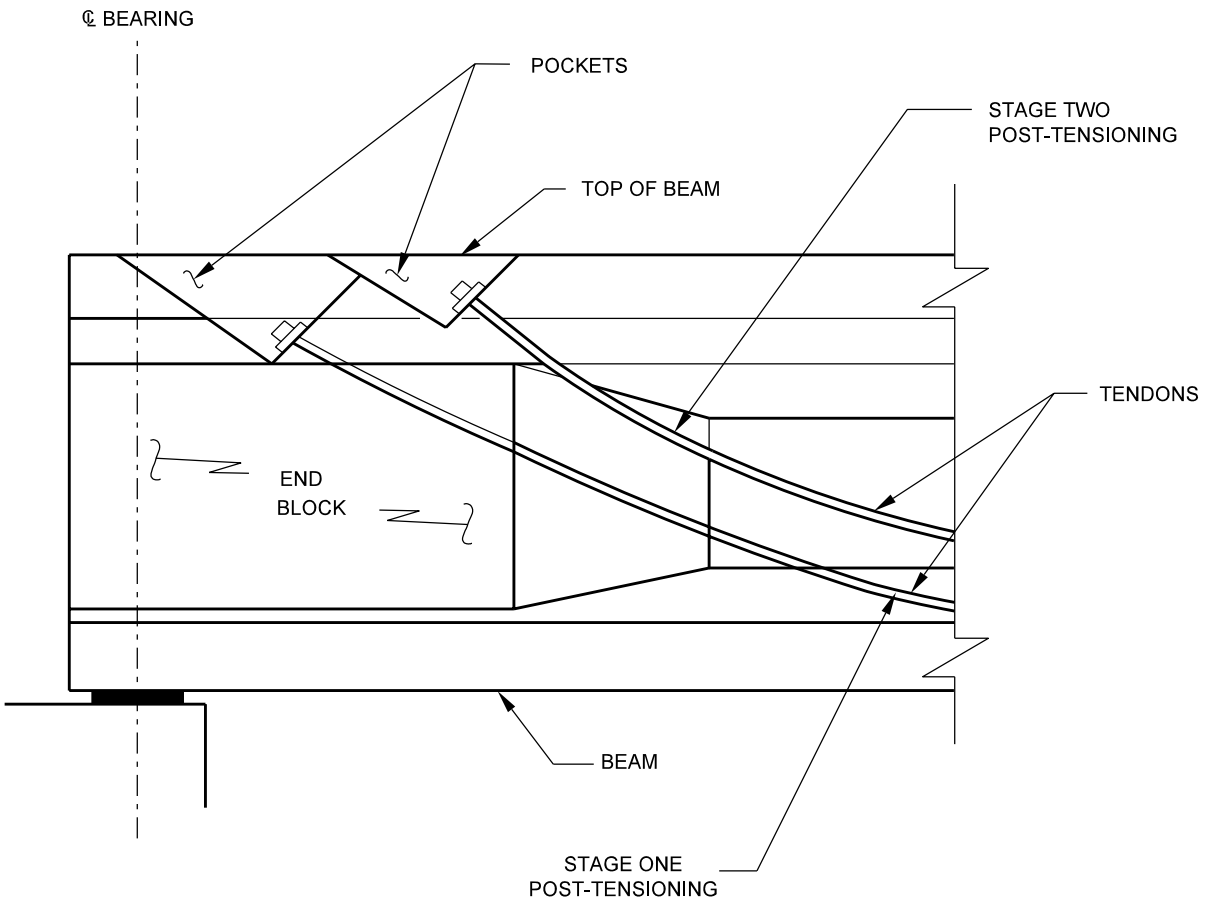

TOP ANCHORAGE FOR LONGITUDINAL POST-TENSIONING
(Type B)

Figure 59-3N

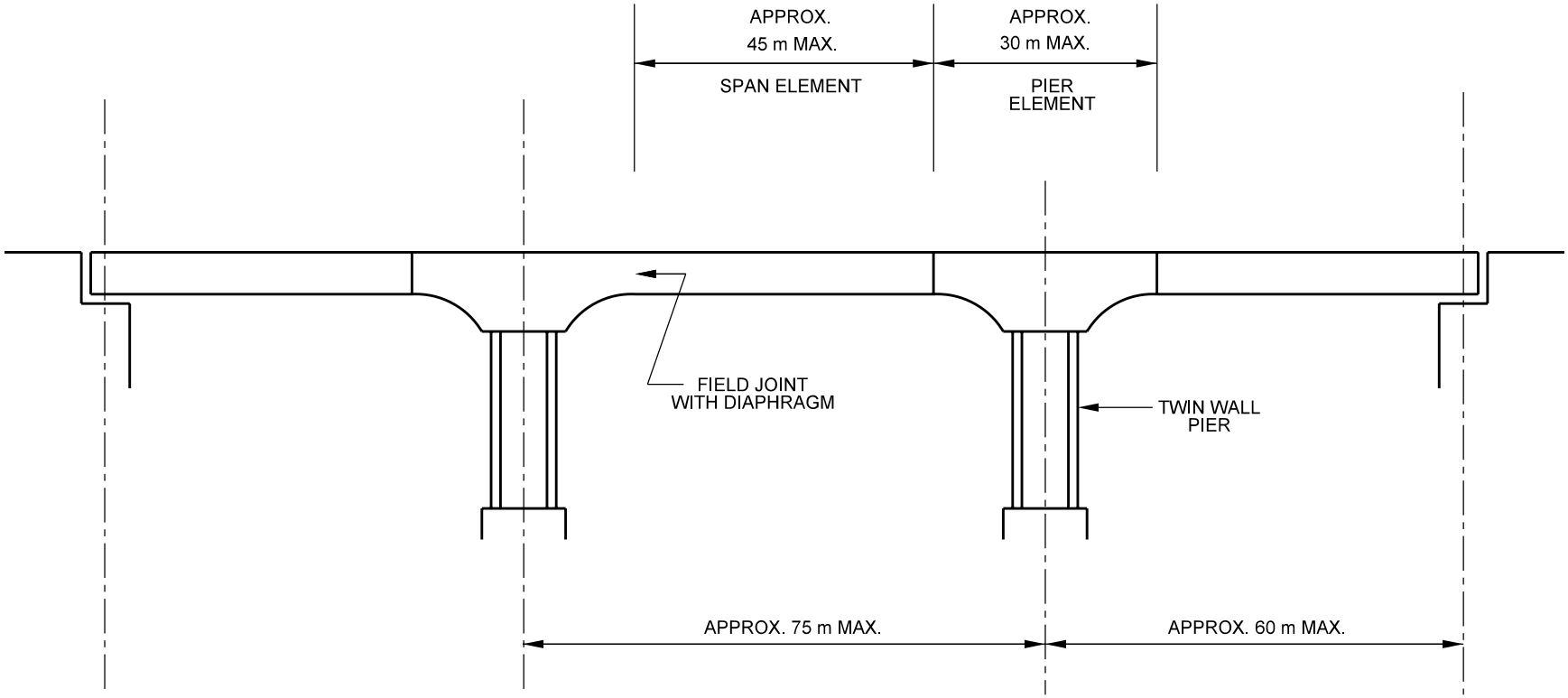

LARGE-SPAN BRIDGE (Type F)
(Constructed from Longitudinal Precast Beam Elements)

Figure 59-3O

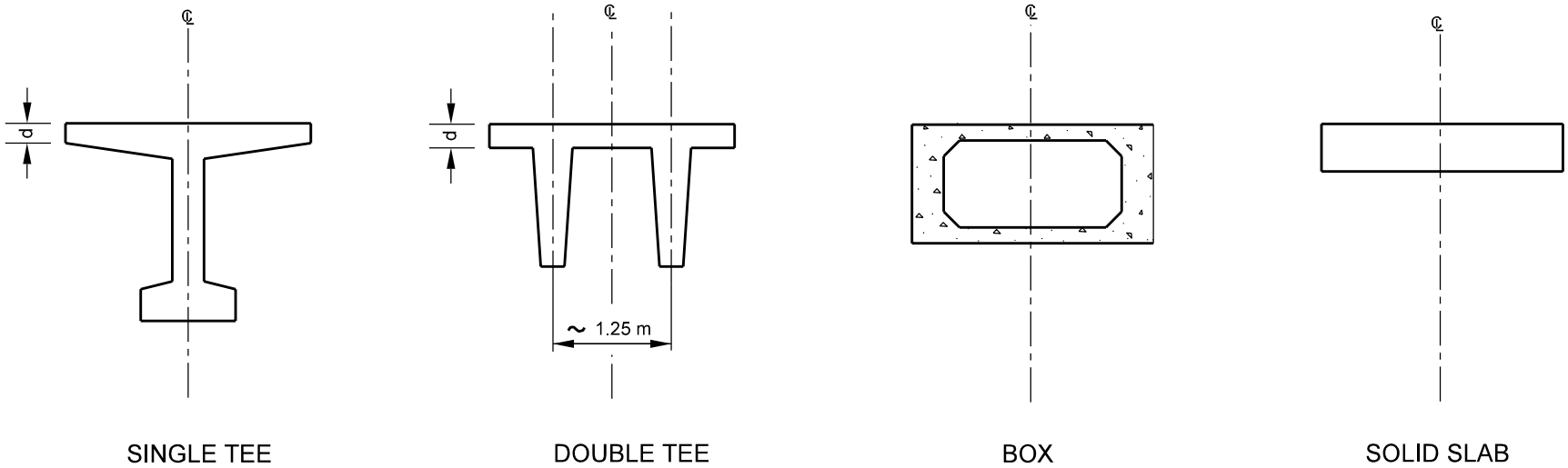

ALTERNATIVES FOR ASSEMBLY OF PRECAST CONCRETE ELEMENTS (Type G)

Figure 59-3P

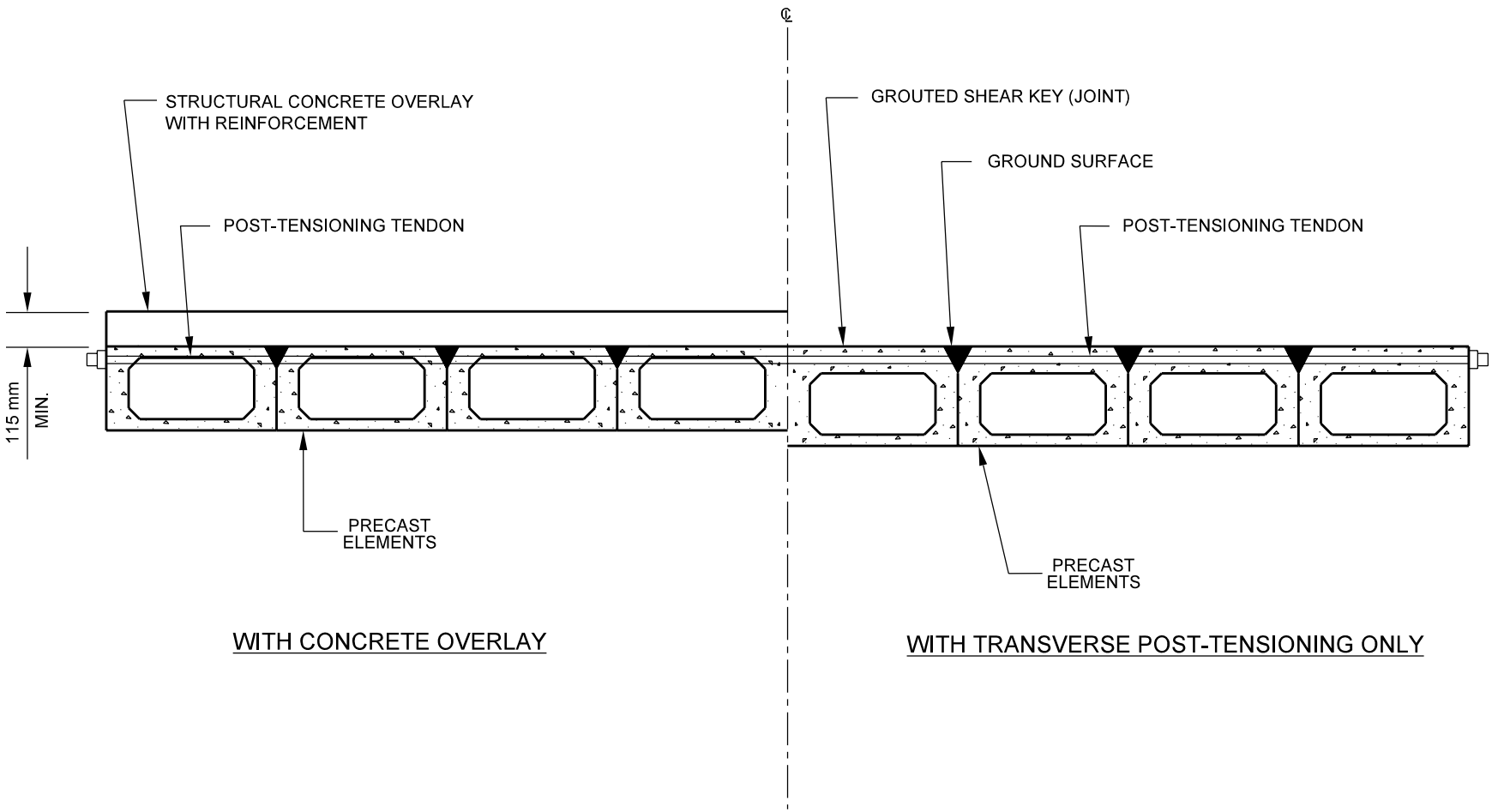

ALTERNATIVES FOR ASSEMBLY OF PRECAST CONCRETE ELEMENTS (Type G)

Figure 59-3Q

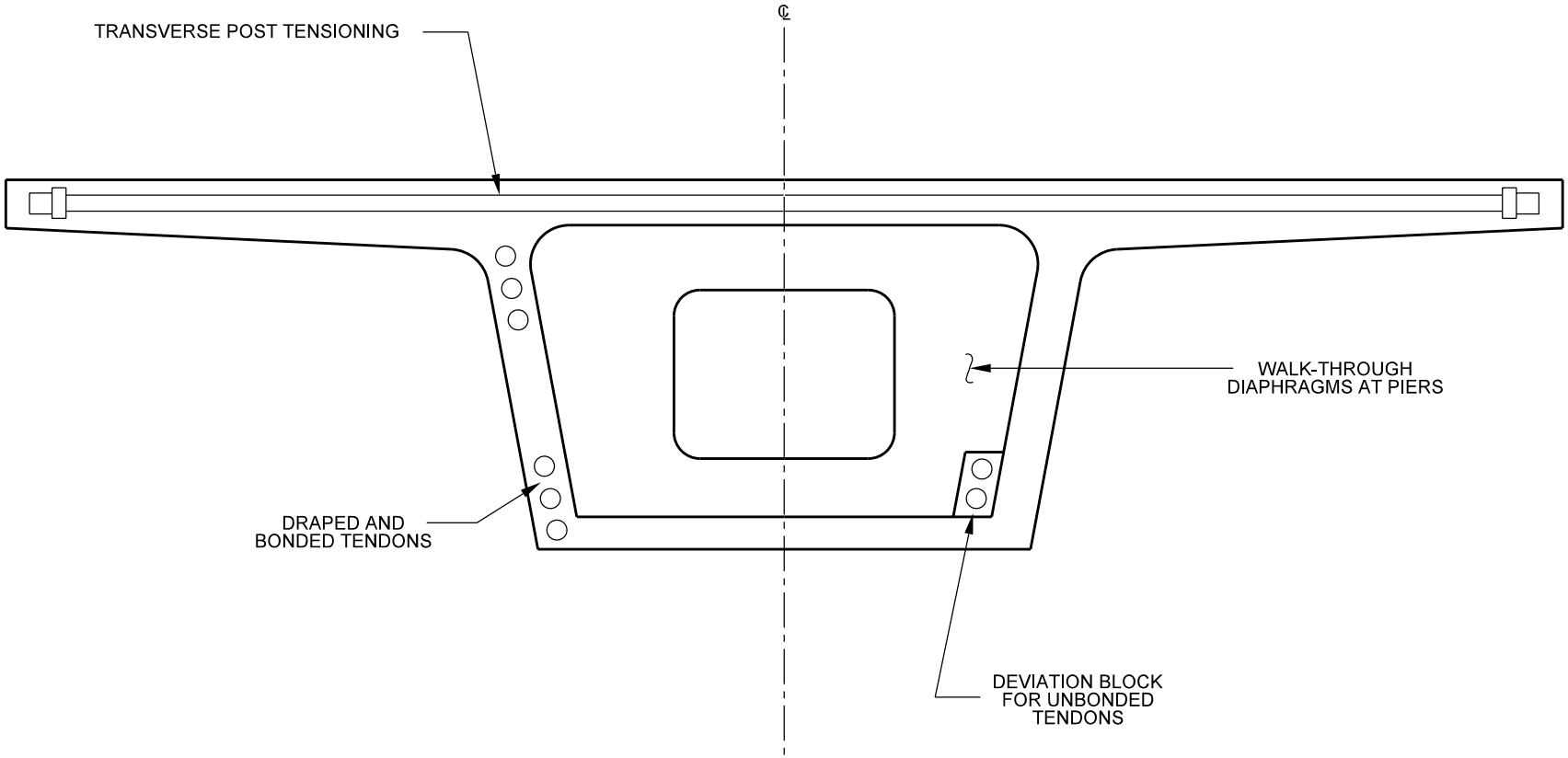

TYPICAL CROSS SECTION FOR SEGMENTAL CONSTRUCTION (Type H)

Figure 59-3R

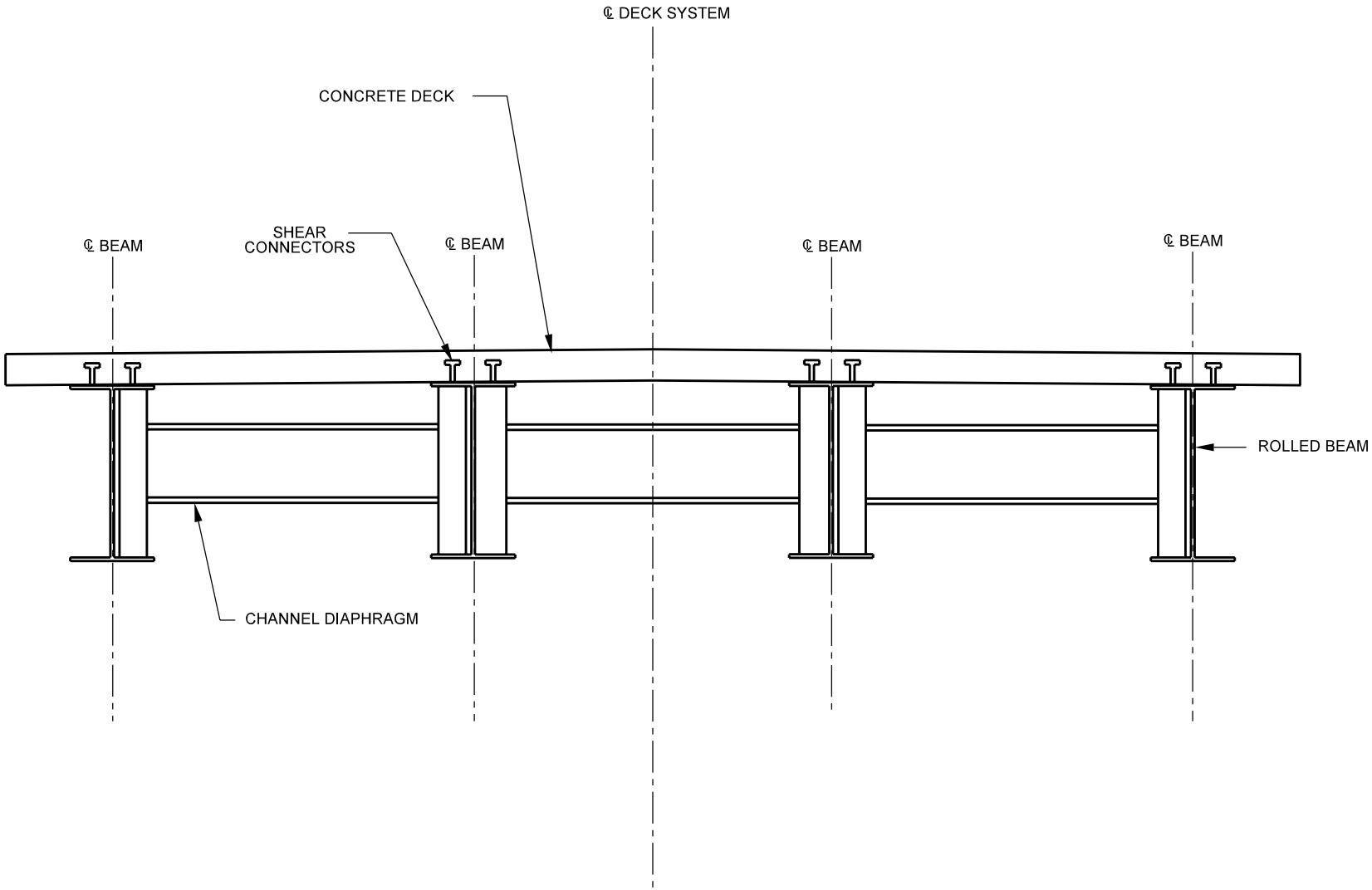

TYPICAL CROSS SECTION WITH COMPOSITE, STEEL ROLLED BEAMS (Type I)

Figure 59-3S

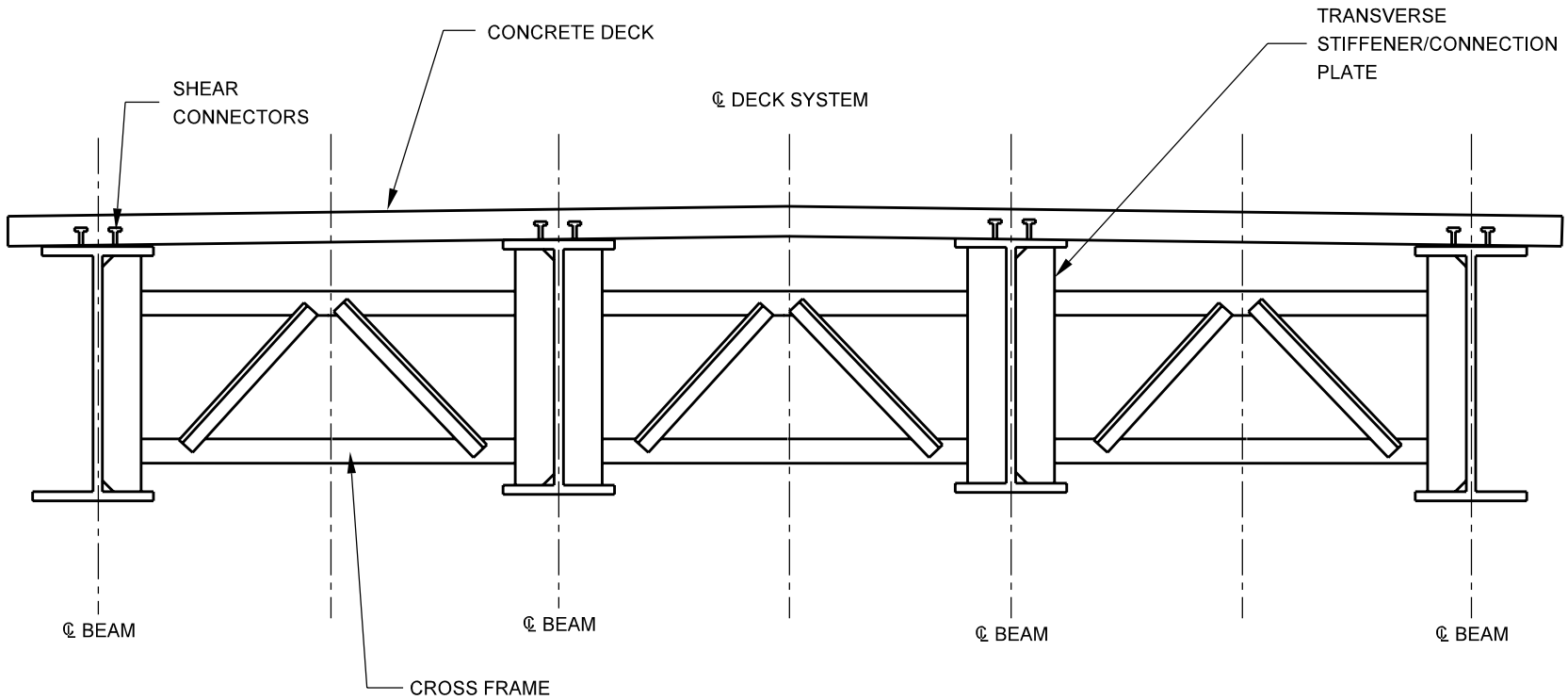

TYPICAL CROSS SECTION WITH COMPOSITE, STEEL PLATE GIRDERS
(Type J)

Figure 59-3T

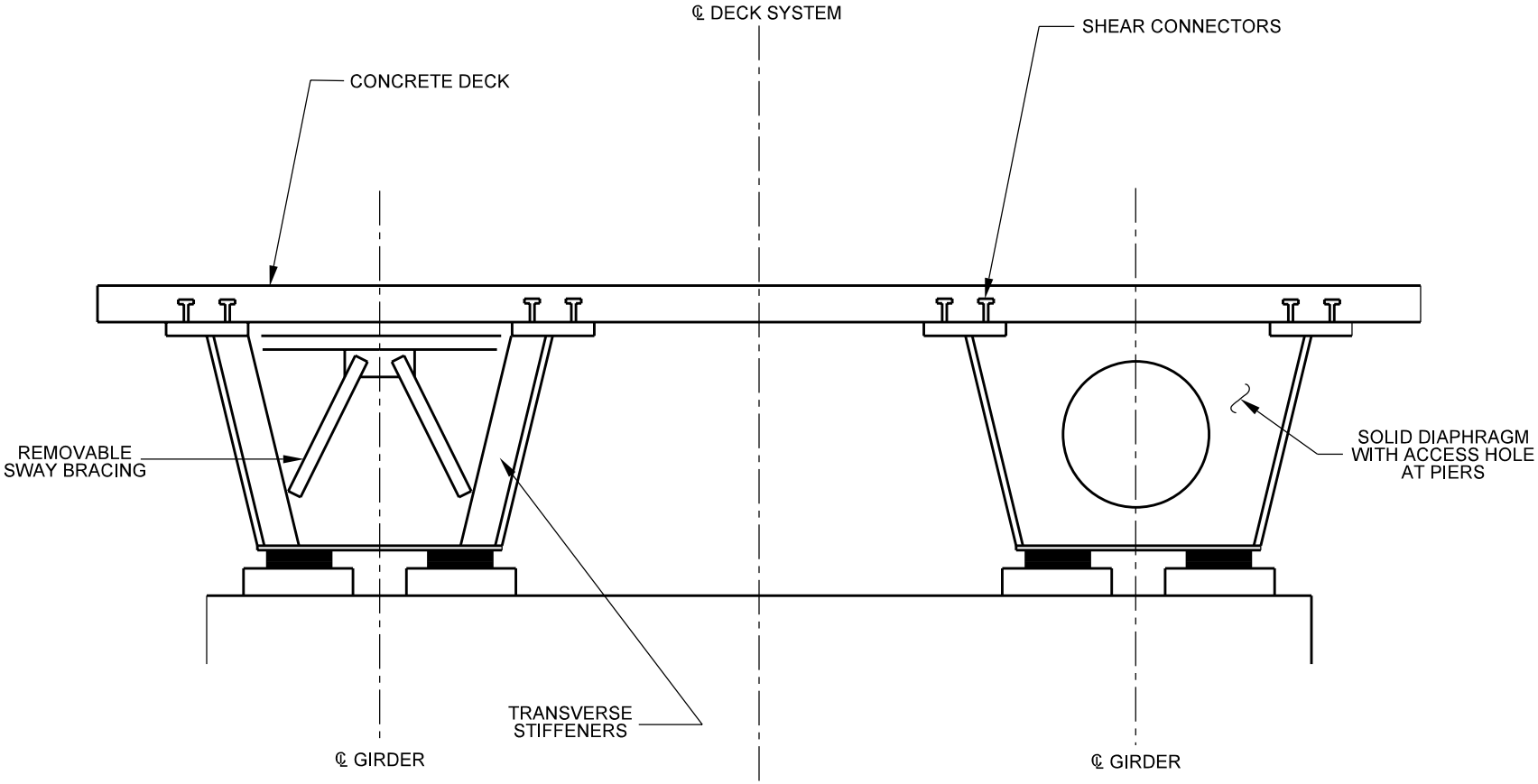

TYPICAL CROSS SECTION WITH COMPOSITE STEEL BOX GIRDERS
(Type K)

Figure 59-3U

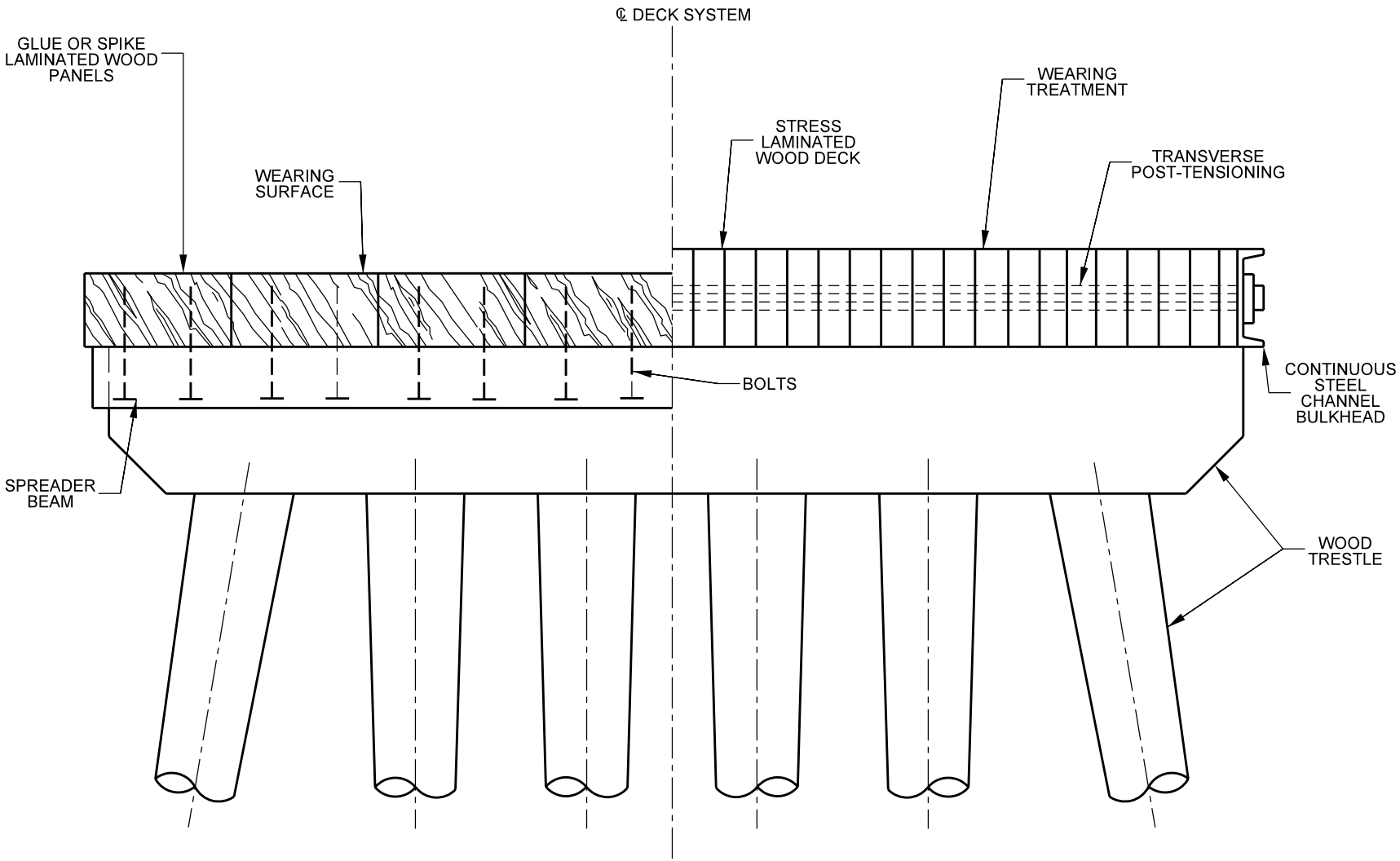

TYPICAL CROSS SECTION FOR LAMINATED WOOD DECKS
(Type L1 and L2)

Figure 59-3V

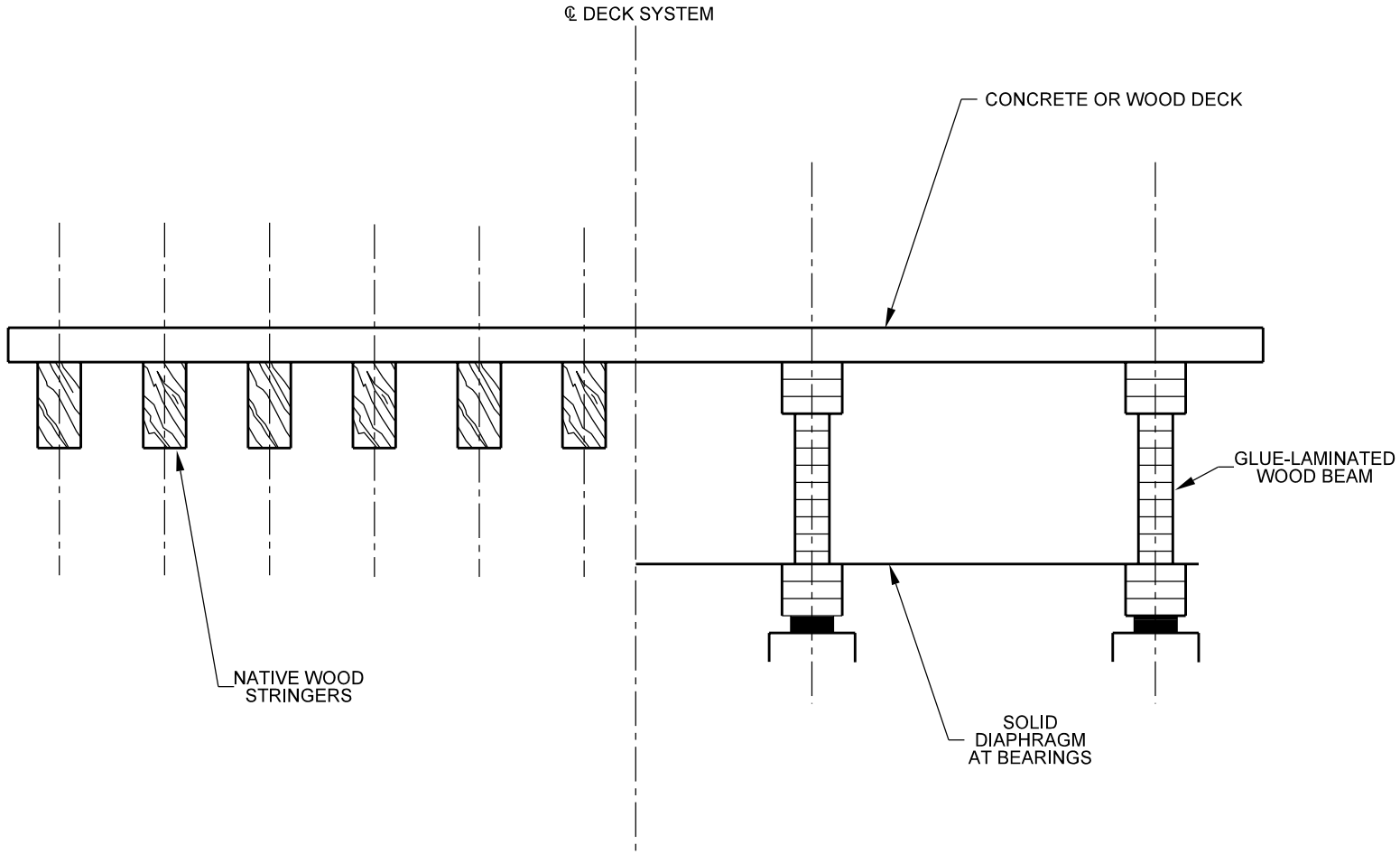

TYPICAL CROSS SECTION WITH WOOD BEAMS
(Type L3 and L4)

Figure 59-3W

Prestressed Concrete Member Type	Cost Per Meter
AASHTO Type I	$280
AASHTO Type II	$345
AASHTO Type III	$410
AASHTO Type IV	$490
Bulb-Tee, 1372 mm	$740
Bulb-Tee, 1676 mm	$785
Bulb-Tee, 1829 mm	$920

The estimated unit prices to be used for steel structural members are as follows:

1. Without alternative structure design, Steel Beam: $2.65/kg; Steel Girder: $2.65/kg.
2. With alternative structure design, Steel Beam: $1.85/kg; Steel Girder: $2.20/kg.

These unit prices are based on designs using Grade 345 steel, and are not applicable to a curved-girder structure.

ESTIMATED UNIT PRICES FOR STRUCTURAL MEMBERS

Figure 59-5A