All dimensions are in mm
unless otherwise noted

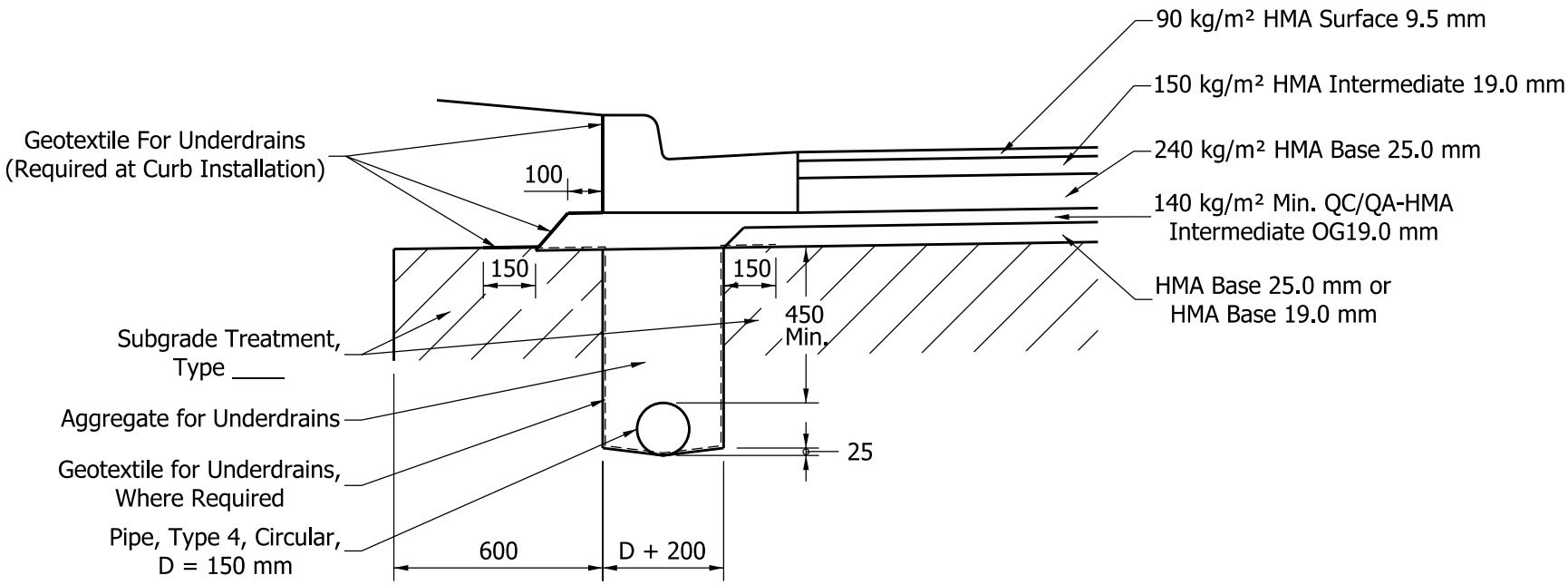

NOTE: Open graded mixtures OG19.0 mm or OG25.0 mm should be QC/QA-HMA, 5, 76. For all other mixtures, see Section 52-9.02 to determine the appropriate HMA mixture designation.

CONCRETE CURB AND GUTTER SECTION FOR HMA PAVEMENT WITH UNDERDRAIN

Figure 52-13N