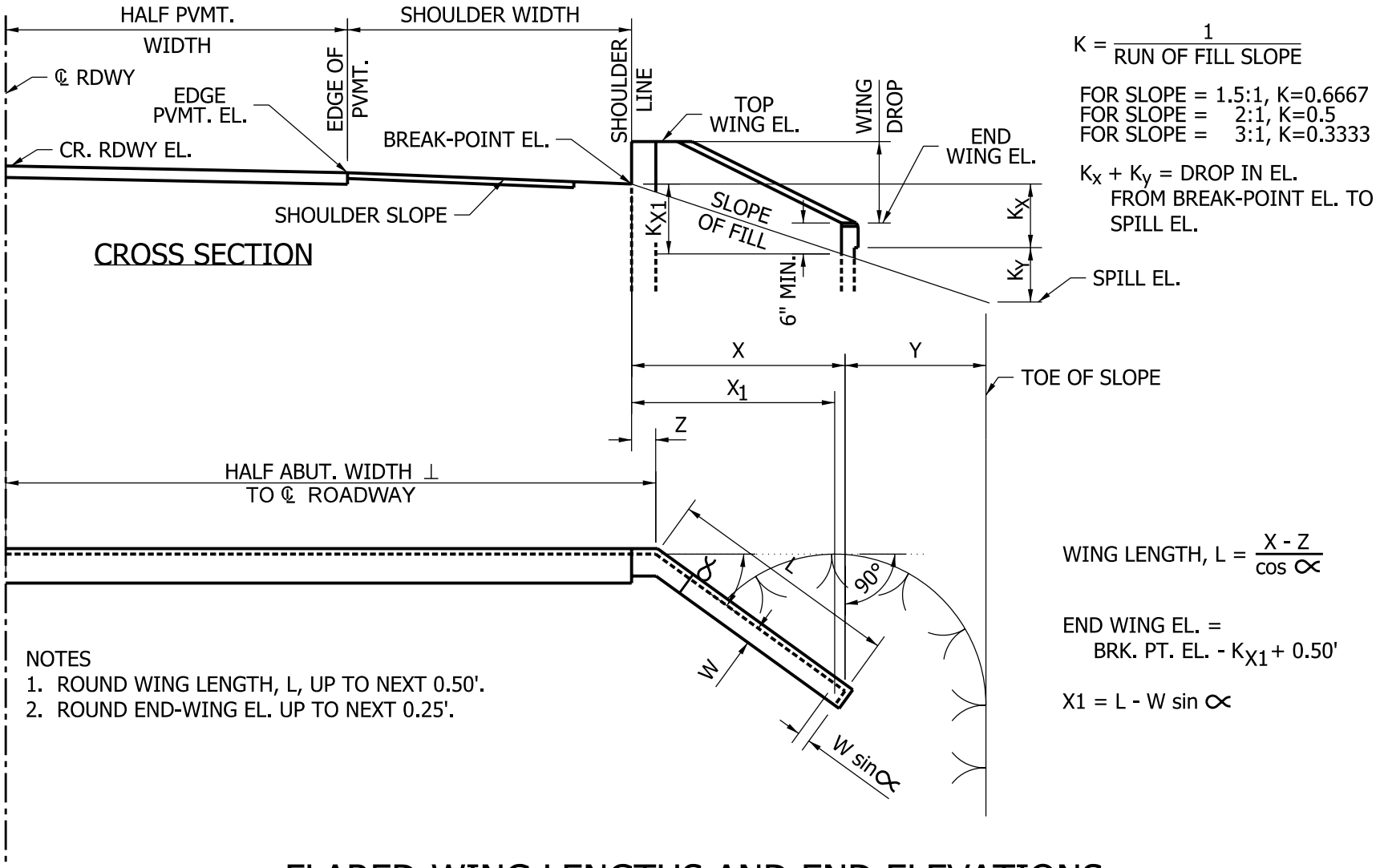

NOTES
1. ROUND WING LENGTH, L, UP TO NEXT 0.50'.
2. ROUND END-WING EL. UP TO NEXT 0.25'.

FLARED-WING LENGTHS AND END ELEVATIONS, SQUARE STRUCTURE

Figure 67-2A (1)