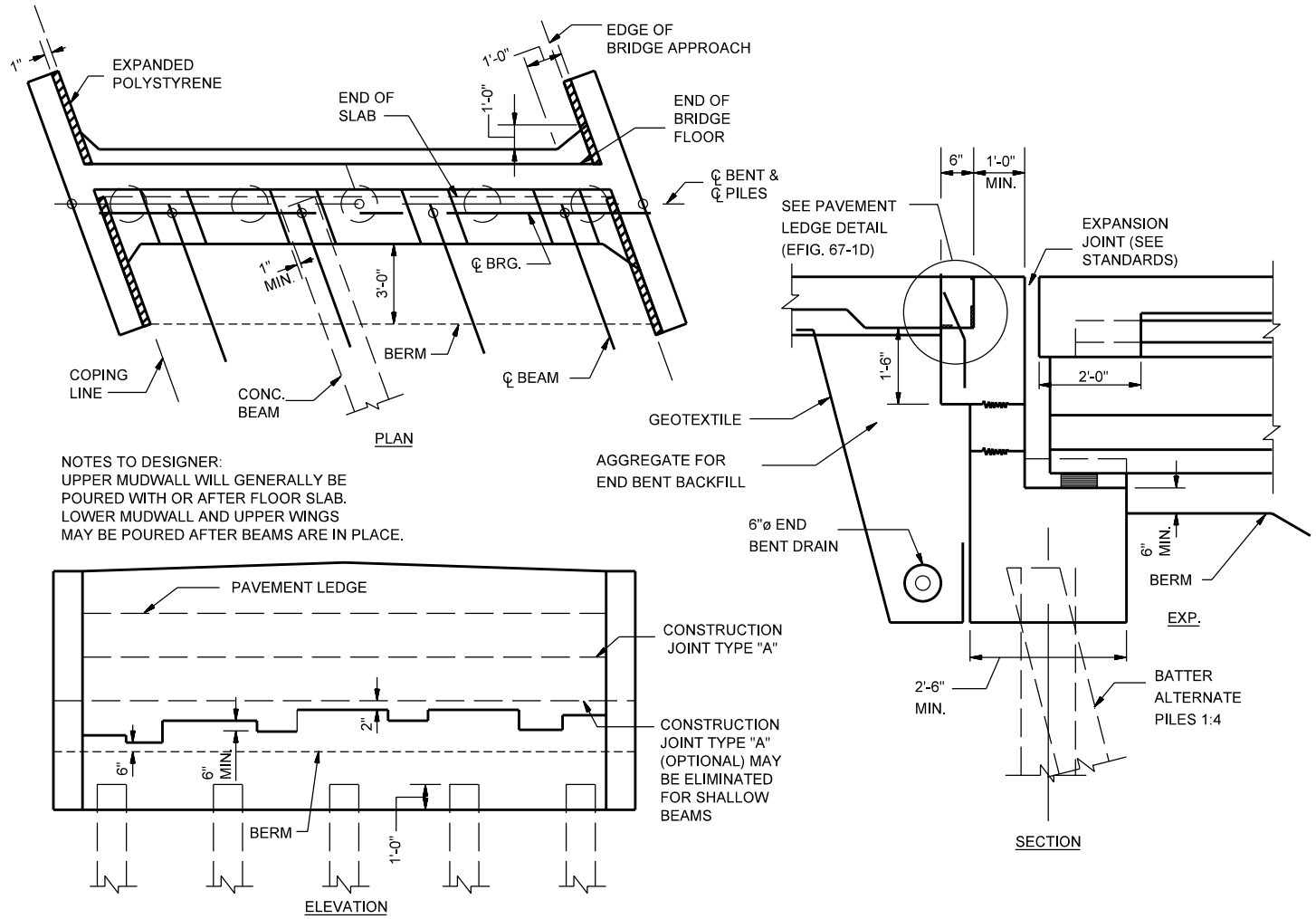

NON-INTEGRAL END BENT
(Deck with Expansion Joint)

Figure 67-1F