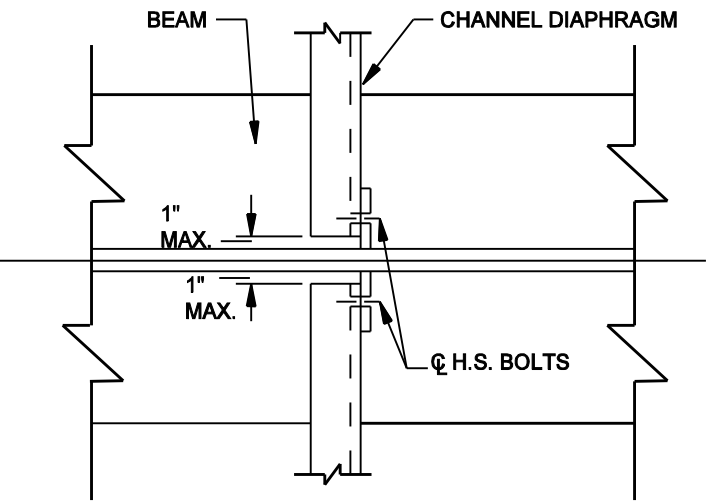

PLAN

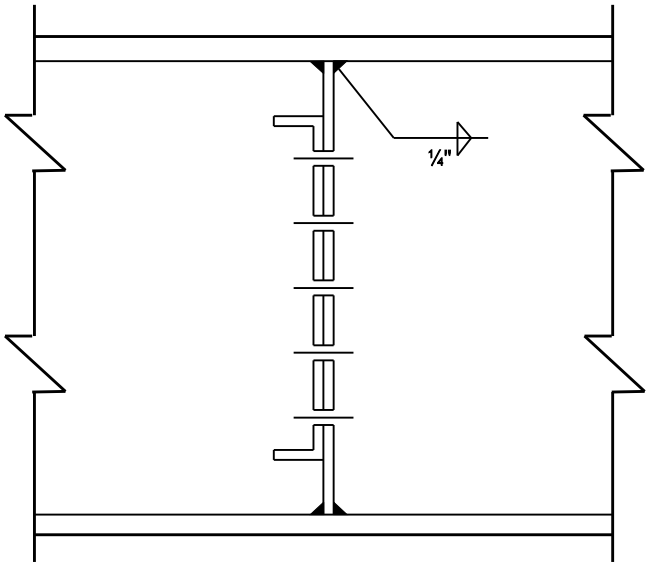

SECTION

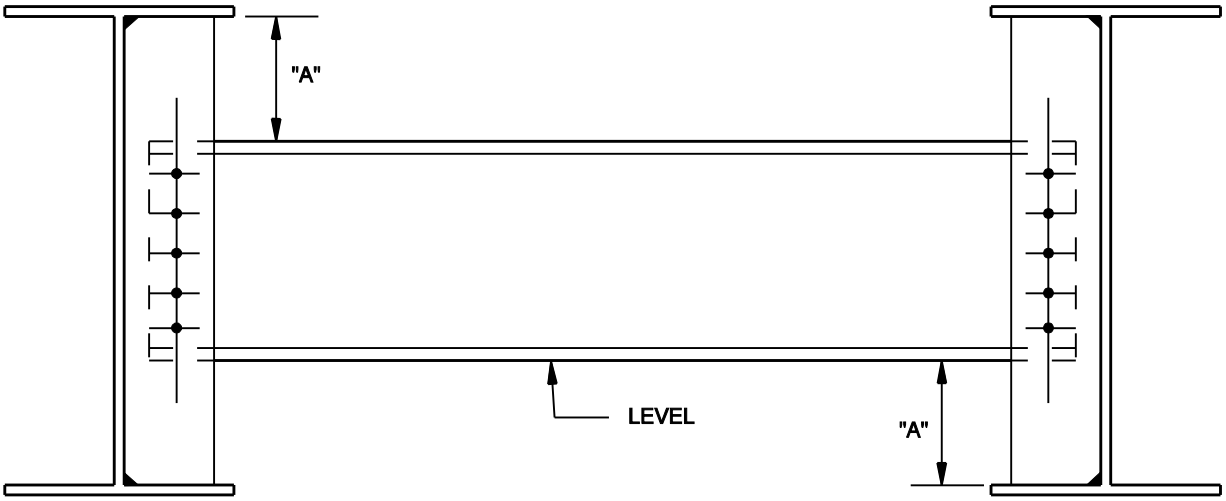

NOTE: "A" DIMENSIONS SHALL BE EQUAL.

ELEVATION

Beam	Diaphragm	High-Strength Bolts
W40	MC (18 x 42.7)	(5) ⅞" diameter
W36	MC (18 x 42.7)	(5) ⅞" diameter
W33	MC (18 x 42.7)	(5) ⅞" diameter
W30	C (15 x 33.9)	(4) ⅞" diameter
W27	C (15 x 33.9)	(4) ⅞" diameter
W24	C (12 x 20.7)	(3) ¾" diameter

TYPICAL INTERMEDIATE DIAPHRAGM CONNECTION

Figure 64-5B