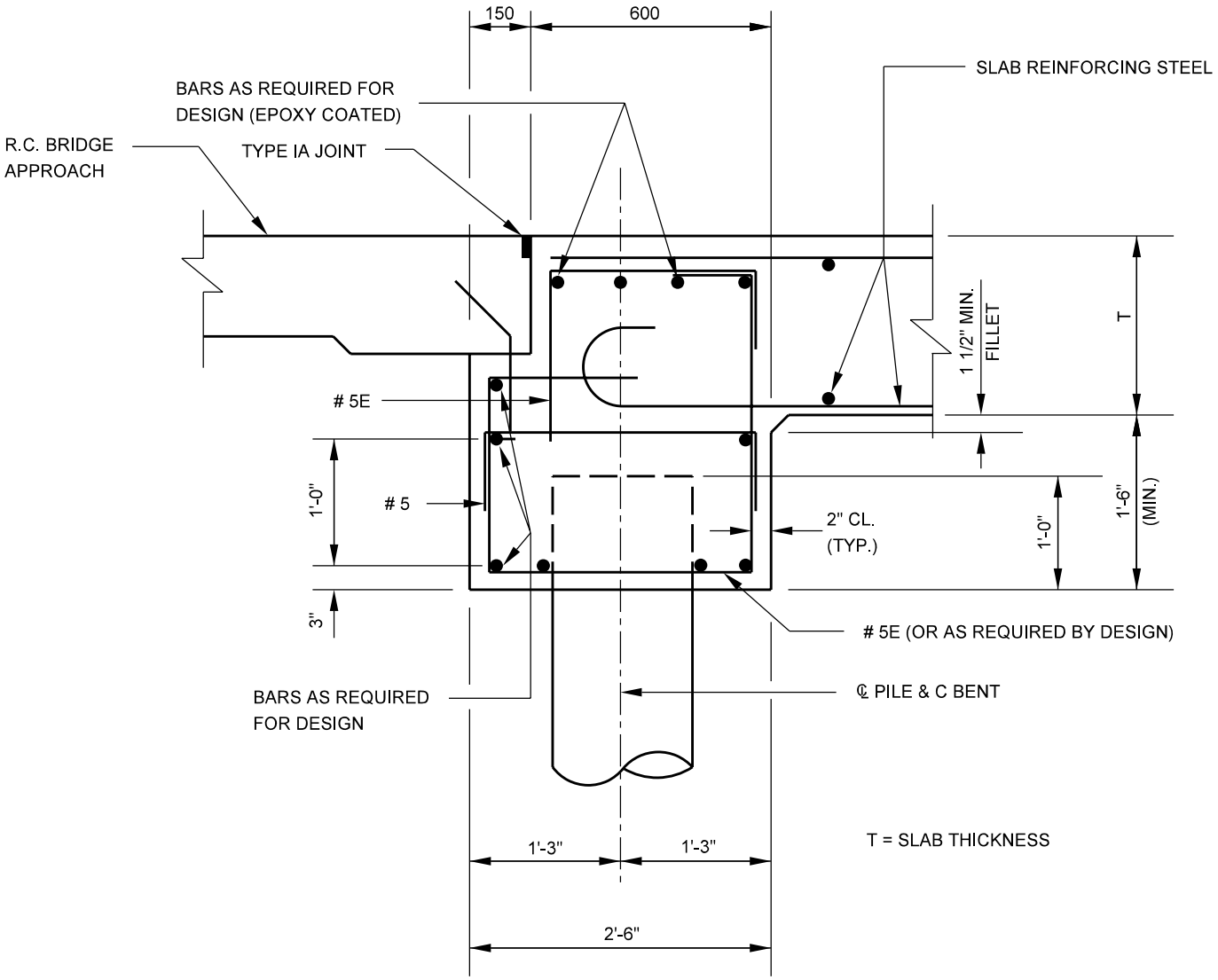

INTEGRAL CAPS AT SLAB SUPERSTRUCTURE
(Section Through End Bent)
Figure 62-3G