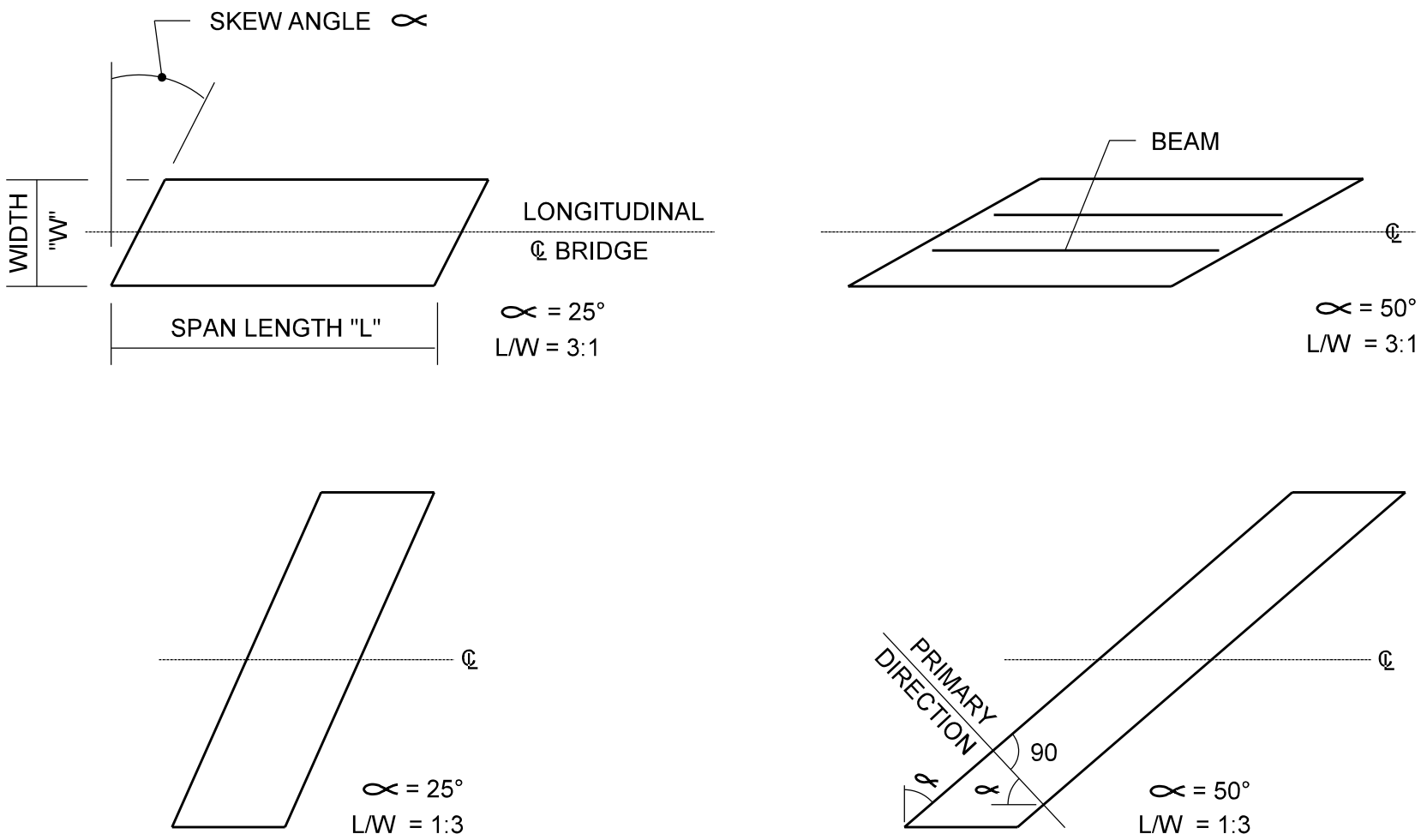

COMBINATION OF SKEW ANGLE AND SPAN LENGTH/BRIDGE WIDTH RATIO

Figure 61-4E