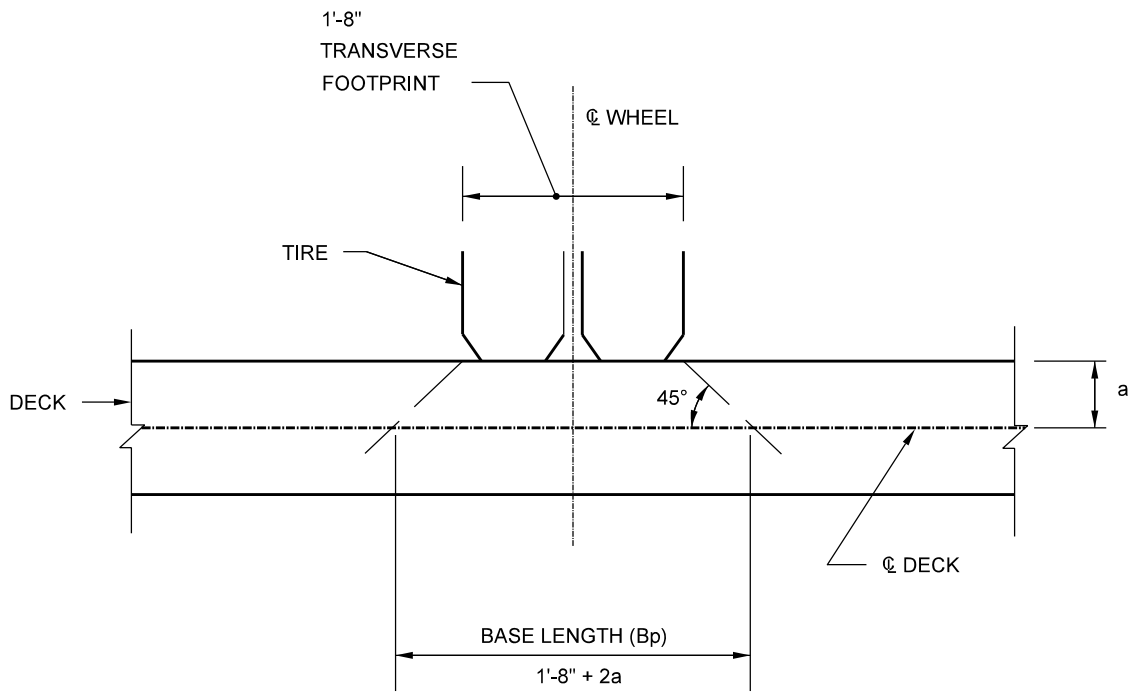

TRANSVERSE BASE LENGTH OF WHEEL LOAD

Figure 61-2A