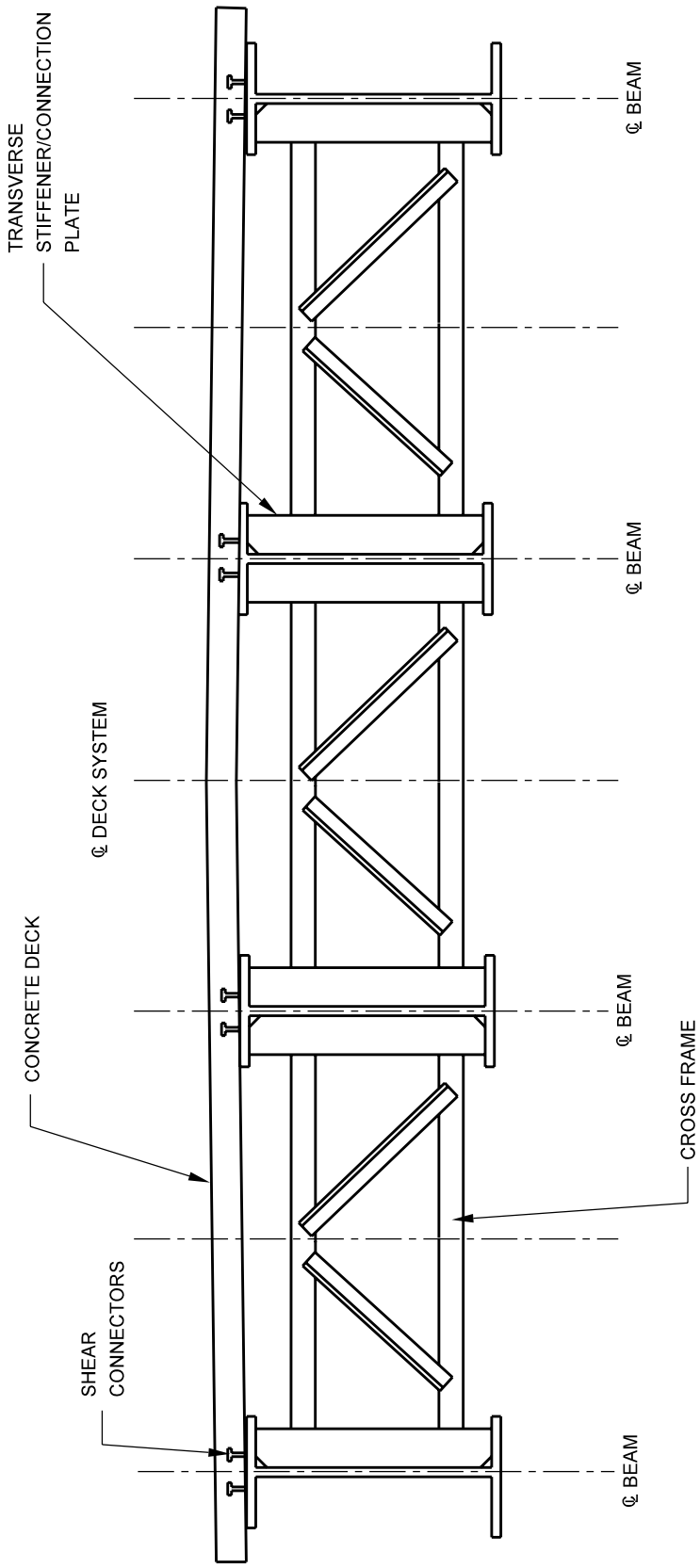

TYPICAL CROSS SECTION WITH COMPOSITE, STEEL PLATE GIRDERS
(Type J)

Figure 59-3T