TABLE OF CONTENTS

TABLE OF CONTENTS....1

52-7A Editable Falling-Weight Deflectometer (FWD) Testing Request Instructions....5
52-8A ESALs Per Truck....5
52-8B PCCP Thickness....5
52-9A ESALs for QC/QA-HMA Mixtures....5
52-9B ESALs for HMA Mixtures....5
52-9C PCCP Patching Limits....5
52-10A Outlet Protector Slope Limits....5
52-10B Video Inspection Contract Quantities....5
52-12A Activity Time Line Example with Cash Flow....5
52-12B Annual Cost Comparison, Life-Cycle Resurface Alt. 1 & 2....5
52-12C LCCA Pavement Design Lives....5
52-13A Full Depth HMA Pavement, ≥ 30 Million ESALs....5
52-13B Full Depth HMA Pavement, 10 Million ≤ ESALs < 30 Million....5
52-13C Full Depth HMA Pavement, 1 Million ≤ ESALs < 10 Million....5
52-13D Full Depth HMA Pavement, < 1 Million ESALs....5
52-13E Composite HMA / Compacted Aggregate Pavement, < 1 Million ESALs....5
52-13F PCCP Mainline with PCC Shoulder, ≥ 30 Million ESALs....5
52-13G PCCP Mainline with PCC Shoulder, < 30 Million ESALs....5
52-13H PCCP with Concrete Curb....5
52-13 I Overlay (Tilt to Crown Section)....5
52-13J Overlay (Crown to Crown Section)....5
52-13K Retrofit Underdrain....5
52-13L Underdrain for HMA Pavement, < 30 Million ESALs....5
52-13M Underdrain for HMA Pavement, ≥ 30 Million ESALs....5
52-13N Concrete Curb and Gutter for HMA Pavement With Underdrain....5
52-13 O Concrete Curb and Gutter for HMA Pavement Without Underdrain....5
52-13P PCCP with Underdrain....5
52-13Q Curbed PCCP with Underdrain....5
52-13R Median Edge of Concrete Pavement Longitudinal Joint Options....5
52-13S Full-Depth HMA Ramp....5
52-13T PCCP Ramp....5
52-13U Ramp with Overlay....5
52-13V HMA Pavement With Concrete Curb and Underdrain....5
52-13W HMA Pavement With Concrete Curb and No Underdrain....5
52-13X Parking Lot Pavement Sections....5
52-14A Editable Pavement Design Request -- INDOT Project Instructional Form....5
52-14B Editable Pavement Design Request – Local Public Agency Project Instructional Form5

CHAPTER FIFTY-TWO....6

52-1.0 INTRODUCTION....6

52-2.0 HISTORY....6

52-3.0 ABBREVIATIONS....7

52-4.0 PAVEMENT DEVELOPMENT PROCESS....7

52-4.01 Scope 7
52-4.02 Design 8

52-5.0 PAVEMENT TYPE 8

52-5.01 Aggregate Pavement 8
52-5.02 Asphalt Pavement 8
52-5.02(01) HMA Surface 8
52-5.02(02) HMA Intermediate 8
52-5.02(03) HMA Base 9
52-5.02(04) Open-Graded Drainage Layer 9
52-5.02(05) Compacted Aggregate Base 9
52-5.03 Portland Cement Concrete Pavement 9
52-5.04 Composite Pavement 10

52-6.0 PAVEMENT SURFACE DISTRESSES 10

52-6.01 Aggregate Pavement 10
52-6.02 Asphalt Pavement 11
52-6.03 Concrete Pavement 13

52-7.0 PAVEMENT SCOPING 16

52-7.01 Pavement on New Alignment 17
52-7.02 Pavement on Replacement Project 17
52-7.03 Rehabilitation Project 17
52-7.03(01) Falling-Weight Deflectometer Testing 17
52-7.03(02) Pavement Coring 18
52-7.04 Partial 3R Project 18
52-7.04(01) Preventative Maintenance (PM) Treatment 18
52-7.04(02) Functional Treatment 18
52-7.04(03) Structural Treatment 19
52-7.05 Milling of Pavement 19
52-7.05(01) Asphalt Milling 20
52-7.05(02) Asphalt Scarification or Profile Milling 20
52-7.05(03) Asphalt-Removal Milling 20
52-7.05(04) Portland Cement Concrete Pavement (PCCP) Milling 21
52-7.05(05) Transition Milling 21

52-8.0 PAVEMENT-DESIGN PROCEDURAL GUIDELINES 21

52-8.01 Pavement Designer 21
52-8.02 Pavement-Design Request 22
52-8.03 DARWin Input 22
52-8.03(01) Simple ESAL Calculation 22
52-8.03(02) Flexible-Pavement Structural Design 24
52-8.03(03) Rigid-Pavement Structural Design 25

52-9.0 PAVEMENT CROSS SECTION DESIGN 26

52-9.01 Aggregate Pavement 27
52-9.02 HMA Pavement 27
52-9.02(01) Mixture Designation 28
52-9.02(02) QC/QA-HMA Mixtures 28
52-9.02(03) HMA Mixtures 30

52-9.02(04) PG Binder and ESALs 30
52-9.02(05) Asphalt-Pavement Rehabilitation 31
52-9.02(06) Shoulders 31
52-9.02(07) [Section Deleted] 32
52-9.02(08) HMA Mixture for Approaches 32
52-9.02(09) Widening with HMA 33
52-9.02(10) Seal Coat 33
52-9.02(11) Prime Coat 33
52-9.02(12) Tack Coat 33
52-9.03 PCCP Pavement 33
52-9.03(01) PCCP Rehabilitation 34
52-9.03(02) Curbs and Shoulders 36
52-9.03(03) Reinforced-Concrete Bridge Approach (RCBA) 36
52-9.04 Composite Pavement 36
52-9.04(01) New Construction 37
52-9.04(02) Rehabilitation 37

52-10.0 UNDERDRAINS 37

52-10.01 Definitions 38
52-10.02 Existing Underdrain Perpetuation 39
52-10.03 Underdrain Warrants 39
52-10.04 Design Criteria 40
52-10.04(01) Slope 40
52-10.04(02) Size 40
52-10.04(03) Outlet Spacing 40
52-10.04(04) Location 40
52-10.04(05) Backfill 41
52-10.04(06) Outlet Protector 42
52-10.04(07) Geotextile for Underdrain 42
52-10.04(08) Video Inspection 42
52-10.05 Contract-Document Preparation 42
52-10.05(01) Plans 43
52-10.05(02) Specifications 44
52-10.05(03) Standard Drawings 44
52-10.05(04) Pay Items 44

52-11.0 PREVENTATIVE MAINTENANCE 44

52-12.0 LIFE-CYCLE COSTS 47

52-12.01 General Discussion 47
52-12.02 Definitions 48
52-12.02(01) Analysis Period 48
52-12.02(02) Discount Rate 48
52-12.02(03) Equivalent Uniform Annual Cost (EUAC) 48
52-12.02(04) LCCA Design Life 49
52-12.02(05) Life-Cycle Cost 49
52-12.02(06) Present Worth (PW) 50
52-12.02(07) Salvage Value (SV) 50
52-12.03 Analysis Steps 51

52-13.0 TYPICAL PAVEMENT SECTIONS 51

52-13.01 HMA Pavement 51
52-13.02 PCC Pavement 52
52-13.03 Miscellaneous Pavement Sections and Details 52

52-14.0 PAVEMENT DESIGN REQUEST AND INSTRUCTIONS 52

52-14.01 Pavement Design Request for INDOT Project 52
52-14.02 Pavement Design Request for Local Public Agency Project 52
52-14.03 Instructions For Completing Pavement Design Request Form 53

List of Figures

Figure No. Title
52-7A Editable Falling-Weight Deflectometer (FWD) Testing Request Instructions
52-8A ESALs Per Truck
52-8B PCCP Thickness
52-9A ESALs for QC/QA-HMA Mixtures
52-9B ESALs for HMA Mixtures
52-9C PCCP Patching Limits
52-10A Outlet Protector Slope Limits
52-10B Video Inspection Contract Quantities
52-12A Activity Time Line Example with Cash Flow
52-12B Annual Cost Comparison, Life-Cycle Resurface Alt. 1 & 2
52-12C LCCA Pavement Design Lives
52-13A Full Depth HMA Pavement, ≥ 30 Million ESALs
52-13B Full Depth HMA Pavement, 10 Million ≤ ESALs < 30 Million
52-13C Full Depth HMA Pavement, 1 Million ≤ ESALs < 10 Million
52-13D Full Depth HMA Pavement, < 1 Million ESALs
52-13E Composite HMA / Compacted Aggregate Pavement, < 1 Million ESALs
52-13F PCCP Mainline with PCC Shoulder, ≥ 30 Million ESALs
52-13G PCCP Mainline with PCC Shoulder, < 30 Million ESALs
52-13H PCCP with Concrete Curb
52-13 I Overlay (Tilt to Crown Section)
52-13J Overlay (Crown to Crown Section)
52-13K Retrofit Underdrain
52-13L Underdrain for HMA Pavement, < 30 Million ESALs
52-13M Underdrain for HMA Pavement, ≥ 30 Million ESALs
52-13N Concrete Curb and Gutter for HMA Pavement With Underdrain
52-13 O Concrete Curb and Gutter for HMA Pavement Without Underdrain
52-13P PCCP with Underdrain
52-13Q Curbed PCCP with Underdrain
52-13R Median Edge of Concrete Pavement Longitudinal Joint Options
52-13S Full-Depth HMA Ramp
52-13T PCCP Ramp
52-13U Ramp with Overlay
52-13V HMA Pavement With Concrete Curb and Underdrain
52-13W HMA Pavement With Concrete Curb and No Underdrain
52-13X Parking Lot Pavement Sections
52-14A Editable Pavement Design Request -- INDOT Project Instructional Form
52-14B Editable Pavement Design Request – Local Public Agency Project Instructional Form

CHAPTER FIFTY-TWO

PAVEMENT AND UNDERDRAIN DESIGN ELEMENTS

52-1.0 INTRODUCTION

This chapter provides guidelines for the design of pavement for the State's or a local roadway system. The pavement-type selection and thickness is determined based on an economical analysis considering subgrade conditions, environmental conditions, pavement material properties, and traffic loadings. Recent advances in technology have enabled the pavement designer to consider longer design lives while staying within the economic constraints of the system. Underdrains are specified for subgrade or pavement-drainage purposes.

52-2.0 HISTORY

A pavement is usually constructed of either asphalt or portland cement concrete. An asphalt pavement is referred to as a flexible pavement, and is composed of a liquid binder in combination with coarse and fine aggregates. A flexible pavement is constructed using Hot Mix Asphalt. A portland cement concrete pavement is referred to as a rigid pavement. An aggregate pavement is constructed with compacted aggregate. The pavement structure is considered to be that part of the road that is placed on the finished subgrade and includes all paved surfaces including shoulders.

Surfaces used for roadways in the past have included bricks, aggregates, and Kentucky rock asphalt. Bricks were commonly placed on a sand base and are still often discovered under layers of old pavement. Aggregates were a common building material when roadways first were being built and can still be found on many county roadway systems. Kentucky rock asphalt is naturally-occurring asphalt that has not been used in recent years but can be found within an existing pavement structure when coring the roadway.

Underdrains have been utilized since the 1950s. Transverse underdrains were some of the first underdrains utilized. This type of underdrain was typically a drain tile or perforated pipe constructed perpendicular to the pavement and spaced longitudinally throughout the project. Beginning in the 1960s, longitudinal pipes were constructed along the edges of the pavement and outlet to the side ditches. Little or no maintenance was performed on the underdrain systems until a mid-1990s study showed that poor performance of the underdrain system was causing failures of pavement structures.

52-3.0 ABBREVIATIONS

AASHTO	American Association of State Highway and Transportation Officials
CAB	Compacted Aggregate Base
ESAL	18-kip Equivalent Single Axle Load
FWD	Falling-Weight Deflectometer
HMA	Hot Mix Asphalt
LCCA	Life-Cycle Cost Analysis
LPA	Local Public Agency
PCCP	Portland Cement Concrete Pavement
PG Binder	Performance-Graded Binder

52-4.0 PAVEMENT DEVELOPMENT PROCESS

Considerations for pavement design occur during the Engineer's Report and design phase. The pavement treatment is determined during the Engineer's Report phase. The type and thickness are determined during the design phase.

52-4.01 Scope

A project such as Added Travel Lanes, Interchange Construction, Road Rehabilitation (3R or 4R Project), New Construction, or Rest-Area / Weigh-Station Construction requires that an Engineer's Report identify a preliminary pavement design prior to design being started. The preliminary pavement design describing the treatment and approximate thickness is to be recommended in the Engineer's Report.

The Planning Division's Office of Pavement Engineering becomes involved with the decision making at the invitation of the Production Management Division, its Office of Environmental Services, or the appropriate district's Production Division. For an LPA project, the LPA's agent may submit a preliminary design for approval to the Office of Pavement Engineering.

For a district-developed project, the Engineer's Report should be developed based on an analysis of Pavement Management System data. The Office of Pavement Engineering will determine the pavement type and structure for a road with AADT of 5,000 or greater, or with Average Daily Truck Traffic (ADTT) of 500 or greater. If the AADT is less than 5,000 or the ADTT is less than 500, the district's project designer will determine the pavement type and structure.

52-4.02 Design

The Office of Pavement Engineering prepares a pavement design at the request of the project designer for an INDOT project or approves a pavement design at the request of the LPA's agent for an LPA project. A pavement-design request should be submitted on the appropriate form for an INDOT or LPA project. An LPA's request should be prepared and signed by an Indiana Professional Engineer. Consideration for the use of underdrains in the pavement section is to be in accordance with Section 52-10.0.

52-5.0 PAVEMENT TYPE

The type of pavement may be aggregate, asphalt, portland cement concrete, or composite.

52-5.01 Aggregate Pavement

An aggregate pavement consists of a dense-graded compacted aggregate placed on a prepared subgrade. The pavement is typically composed of compacted aggregate base size No. 53 or compacted aggregate base size No. 73.

52-5.02 Asphalt Pavement

A new asphalt pavement consists of an HMA surface course, on an HMA intermediate course, on HMA base or compacted aggregate, directly on a prepared subgrade. An asphalt pavement overlay consists of a surface course on an intermediate course on the existing pavement or new base. HMA is a mixture of binder and aggregates. Drainage layers may be utilized in the intermediate and base mixtures. Typical sections for an HMA pavement are included in Section 52-13.0.

52-5.02(01) HMA Surface

The surface course performs several functions for the pavement structure. It reduces the amount of water from entering the pavement, provides a friction course to ensure good friction properties throughout the design life, provides a riding surface to provide a smooth ride, and provides a structural layer to help carry the anticipated design traffic.

52-5.02(02) HMA Intermediate

The intermediate course also performs several functions for the pavement structure. It functions as a leveling course to help create a smooth pavement, and as a structural course to help carry the anticipated design traffic.

52-5.02(03) HMA Base

The base course is designed as a structural layer to help carry the anticipated design traffic concurrent with its role in handling or keeping water out of the pavement system by isolating the subgrade. Base material is a dense-graded, practically impermeable mixture.

52-5.02(04) Open-Graded Drainage Layer

If an open-graded drainage layer is required, a mixture such as QC/QA-HMA Intermediate OG 25.0 mm or OG 19.0 mm is used as a conduit to remove water entering the pavement system, and as a structural layer to help carry the anticipated design traffic loads. If an open-graded mixture is required, underdrains should be included.

52-5.02(05) Compacted Aggregate Base

Compacted aggregate base, if required, functions as a structural layer while economically increasing the pavement thickness to help protect the pavement from the effects of frost action.

52-5.03 Portland Cement Concrete Pavement

Plain jointed PCCP consists of concrete materials on a subbase and a prepared subgrade. PCCP is composed of portland cement, pozzolans, coarse and fine aggregates, water, and chemical admixtures.

Subbase is a granular layer placed under PCCP to minimize pumping of erodible subgrade material and to provide support for the pavement. Subbase may be classified as drainable or dense. A drainable subbase provides a conduit to remove water that enters the pavement system and should be used for pavements where underdrains are required. A dense-graded subbase provides for a stable working platform together with support for the pavement without drainage layers.

1. Drainable Subbase. A drainable subbase consists of an aggregate drainage layer over a compacted aggregate separation layer.

2. Dense Subbase. A dense subbase consists entirely of compacted aggregate.

52-5.04 Composite Pavement

A composite pavement consists of multiple pavement types, i.e., HMA over PCC Base, PCCP over asphalt or asphalt/PCC composite pavement, or HMA over compacted aggregate base. A composite pavement may be used for widening where the existing composite pavement is considered to be in generally satisfactory condition. The widened pavement will match the existing sections of the existing pavement. A composite pavement should be designed in accordance with Section 52-9.04.

52-6.0 PAVEMENT SURFACE DISTRESSES

The strengths and limitations of each pavement system must be understood prior to designing a pavement. Common pavement weaknesses, distresses, and their causes and recommended treatments are listed below.

52-6.01 Aggregate Pavement

1. Dusting. Dusting is caused by the displacement of road fines by traffic causing a cloud of dust behind user vehicles. The recommended treatment for dusting is to use a dust palliative.

2. Potholing. Potholing is caused by traffic displacing weakened areas of the unbound pavement. Insufficient structural strength, segregation in the aggregate surface, or soft subgrade conditions cause the weakened areas. The recommended treatment for isolated potholes is regrading the surface. However, the recommended treatment for numerous potholes in the pavement requires additional aggregate to be placed on the roadway prior to regrading.

3. Rutting. Rutting is caused by traffic displacing the unbound aggregate outside the wheel paths or to the sides of the road. The recommended treatment is to re-grade the roadway to replace the displaced aggregate. In a severe situation, the placement of additional aggregate may be required prior to regrading.

4. Washboarding. Washboarding or corrugations develop across the road perpendicular to the direction of traffic. The primary causes of washboarding are too-fast driving habits, lack of moisture, and poor quality aggregates. It is most prevalent under heavy loads or where traffic accelerates or decelerates. The recommended treatment for light washboarding is to correct it by regrading the roadway. The recommended treatment for

moderate to severe washboarding is milling 1 to 2 in. below the depth of the corrugations, adding water, and regrading. Compacted aggregate base, size No. 53 or size No. 73 should be selected to resist washboarding.

52-6.02 Asphalt Pavement

1. Block Cracking. Block cracking is a non-load-related distress that divides the pavement into blocks that range in size from 1 ft^2 to 10 yd^2. Block cracking is caused by shrinkage of the pavement combined with temperature cycling. On a pavement with 4 or more lanes, block cracking can only occur in the passing lane as it is a non-load-related distress. Traffic loadings in the travel lane tend to relieve the shrinkage stresses. The recommended treatment for block cracking is to remove the existing surface course by asphalt milling 1 in to 1 ½ in. and overlay the milled surface.

2. Flushing. Flushing is defined as free binder or binder and fine aggregate mastic which migrate to the surface of the pavement forming darkened areas principally in the wheel paths. Severe flushing creates a tacky surface and may run downhill. Flushing may occur due to excessive binder or moisture, low air voids in the mix, or stripping. The recommended treatment for a flushed area is to mill the mixture causing the flushing prior to overlaying of the pavement. Asphalt milling to the depth of the mixture causing the flushing should be used prior to overlaying.

3. Frost Heave. Frost heave is defined as the differential displacement of the surface if a frost-sensitive subgrade freezes. Frost heave is accentuated by moisture in the subgrade/subbase. A surface allowing a large amount of water due to low density/high voids, segregation, etc., to enter the pavement structure is prone to frost heave. Frost heave dissipates during the spring once the subgrade/subbase thaws. Future occurrences of frost heave may be lessened by covering the surface to minimize the amount of water entering the pavement system.

4. Longitudinal Cracking. Longitudinal cracks are cracks in the pavement surface that are parallel to the centerline of the roadway. Longitudinal cracks may be caused by cracks reflecting through a pavement surface, poor construction practice at longitudinal joints, or by wheel loadings. The recommended treatment for longitudinal cracking is to seal, rout and seal, or in a severe situation, remove and replace the distressed area.

5. Polishing. Polishing is caused by the abrasion of the surface to the extent that the pavement surface becomes slick. Polishing of the surface aggregate is traffic dependent. The INDOT *Standard Specifications* allow only certain types of aggregates for surface courses dependent on the number of ESALs specified. The recommended treatment for a

polished surface is to remove the polished areas by scarification or profile milling prior to placing an overlay.

6. Raveling. Raveling is the loss of aggregate from the upper pavement layer exposed to traffic. Raveling may be caused by insufficient binder material, insufficient compaction, or segregation of the mixture during construction of the pavement. The recommended treatment for severe raveling is to remove the surface course by asphalt milling 1 in. or 1 ½ in. prior to placing an overlay. The recommended treatment for moderate raveling is to overlay the roadway. The recommended treatment for minor raveling is to spot seal the raveled area.

7. Reflective Cracking. Reflective cracks are those cracks that have developed in an overlay resulting from the movement of the joints and cracks in the underlying pavement. Cracking occurs once the movement of the underlying pavement exceeds the elasticity of the overlay resulting in the migration of the crack pattern from the underlying pavement to the surface of the pavement. An extremely low temperature or a sudden drop in temperature can create tensile stresses in the pavement beyond the tensile properties of the binder material. Differential movement at the existing crack as traffic travels across the crack increases the stress in the overlay. If reflective or transverse cracking is left unchecked, the pavement adjacent to the area of the cracks will further deteriorate by raveling or stripping, and will result in a rough riding surface.

   The recommended treatment for low-severity reflective cracking is to seal the cracks with a sealant material to minimize the intrusion of water. The recommended treatment for moderate to high severity occurrences of reflective cracking include sawing or routing and resealing the existing cracks, or asphalt removal milling and placement of an overlay. An appropriate slab reduction should be considered to minimize the movement of the PCC base from traffic loadings.

8. Rutting. Rutting is longitudinal deformation of the pavement in the wheel tracks. Rutting is the result of an improper mix design, poor compaction, a soft subgrade, or stripping (water damage) in the underlying layers of the pavement. The recommended treatment for rutting is to mill and replace the deformed material. The type of milling specified is dependant on the average rut depth as determined by the INDOT pavement management system. Scarification or profile milling is used from minor rutting less than or equal to ¼ in. Asphalt milling is used for severe rutting greater than ¼ in. For minor rutting, preventative-maintenance alternatives such as micro surfacing may be considered.

9. Shoulder Drop-off. Shoulder drop-off is the difference in elevation between the driving lanes and the shoulders due to settlement or erosion. The recommended treatment for a

severe shoulder drop-off of greater than 1 in. is to fill in the depressed area with compacted aggregate size No. 53 or HMA patching materials.

10. Stripping. Stripping is the debonding of the binder film from the aggregate. Visible signs of stripping include surface delamination, raveling, potholing, or surface discoloration. Stripping is an aggregate-dependent distress. Stripping is caused by a combination of heat, pressure, and water. Sources of heat, water, and pressure are rain, summer sun, and heavy trucks. The recommended treatment for stripping is to remove the stripped material by asphalt milling and then to overlay the milled surface.

11. Thermal Cracking. Thermal cracking is transverse cracking of a pavement. The cause of thermal cracking is binder material that was originally too hard or has age-hardened. The recommended treatment for severe thermal cracking is to remove the surface course by asphalt milling 1 in or 1 ½ in. prior to placing an overlay. Minor to moderate areas of thermal cracking should be sealed.

12 Alligator or Fatigue Cracking. Alligator or fatigue cracking occurs with repeated traffic loadings and is considered to be a structural failure of pavement. The cracking is best described as spider-type cracking on the surface of the pavement and occurs in the wheel paths. The recommended treatment for the cracking is to remove and replace the failed area by milling, and then place a structural overlay on the pavement.

13. Weathering. Weathering consists of hardening and loss of binder material due to oxidation. The hardening and the loss of the binder material may cause the displacement of aggregate particles from the riding surface similar to raveling. The recommended treatment for this distress is to seal coat or overlay the surface.

52-6.03 Concrete Pavement

1. Alkali-Silica Reactivity (ASR). ASR occurs if silica in the aggregates and alkali in the cement react in the presence of water to form a gel-like substance. The gel-like substance absorbs moisture and swells, causing the concrete surface to crack in a maplike pattern. During later stages of ASR distress, the surface will begin to spall. The recommended treatment for pavement in advanced stages of ASR distress is an overlay. A slab-reduction technique, such as crack-and-seat or rubblization, should be considered for a high-traffic-volume road in accordance with the INDOT *Standard Specifications*.

2. Blowup. A blowup is an isolated and sudden elevation change along the profile of the roadway. A severe blowup occurs if adjacent panels rise off the ground in a tentlike manner. A blowup is caused by the buildup of compressive stresses in the pavement due to the infiltration of incompressible materials into the joints. A blowup occurs at a

transverse crack or joint that is not wide enough to accommodate the expansion of the concrete slab. Some coarse aggregates exposed to freeze-thaw conditions in the presence of free moisture will influence the growth of the concrete pavement. In addition, buildup of water within the pavement structure acts as a lubricant and catalyst for a blowup to occur. The recommended treatment for repairing a blowup is to remove the affected area and patch with PCCP patching.

3. Corner Break. A corner break is a random diagonal crack at the intersection of transverse and longitudinal joints. A corner break is caused by load repetition in combination with loss of support, poor load transfer across joints or thermal curling, or moisture-warping stresses. The recommended treatment for a corner break is to remove the affected area for a full lane width and patch with PCCP. A pavement with numerous corner breaks should be rehabilitated by using a slab-reduction technique and an overlay.

4. "D" Cracking. "D" cracking occurs at a transverse joint caused by the expansion of the aggregate in PCCP. “D” cracking is caused by an expansive coarse aggregate in the PCCP under freeze-thaw conditions, and starts near the bottom of the slab and progresses up through the concrete. Symptoms of "D" cracking in jointed PCCP are spider web cracks at the transverse joints. "D" cracking detected at a surface location indicates that other locations are also "D" cracking. The recommended treatment for PCCP with "D" cracking is to use a slab-reduction technique and an overlay.

5. Faulting. Faulting is a differential in elevation of two adjacent slabs. Faulting can occur at a joint or at a random transverse crack in PCCP. Faulting is caused by a loss of aggregate or mechanical load transfer and the loss of support or the build-up of material under one of the slabs, causing the slabs to be displaced relative to each other. The recommended treatment for an isolated faulted area is to remove the affected area and patch with PCCP patching, or to use retrofit dowel bars while reestablishing subgrade support and correcting the surface profile. Pavement with significant faulted areas should be rehabilitated by using a slab-reduction technique and an overlay.

6. Joint Failure. Joint failure occurs in a contraction joint that has cracked or spalled, or does not perform as desired. A joint failure is caused by misaligned dowel bars during construction or by fatigue from repetitive loads. The recommended treatment for localized joint failure is to remove the affected area and patch with PCCP patching. A pavement with significant areas of joint failure should be rehabilitated by using a slab-reduction technique and an overlay.

7. Joint-Seal Failure. Joint-seal failure consists of the loss of adhesion between the seal material and the joint faces, puncturing of the seal material, or displacement of the seal material. The recommended treatment for failed seal material is to remove the existing joint-seal material, clean the joint faces, and reseal the joint.

8. Longitudinal Cracking. A longitudinal crack is a random crack oriented predominantly along the pavement. A longitudinal crack may occur because of the loss of support or the improper sawing of the joints. Longitudinal cracking is detrimental because it allows water flowing across the pavement to enter the pavement structure. An isolated area of longitudinal cracking should be repaired in accordance with the INDOT *Standard Specifications*. PCCP with excessive areas of longitudinal cracking should be rehabilitated by using a slab-reduction technique and an overlay.

9. Polishing. Polishing is caused by the abrasion of the surface to the extent that the surface becomes slick. Polishing is traffic-dependent. The recommended treatment for a polished surface is to diamond-grind the PCCP surface or PCCP mill and overlay.

10. Poor Rideability. Poor rideability is the result of a roughened pavement caused by poor construction techniques, unstable subgrade, or the deterioration of the riding surface. Poor ride quality can be corrected by diamond-grinding the surface if no other distresses are present in the pavement structure. Appropriate remediation techniques should be considered if other distresses are present.

11. Popout. A popout is a small hole, ½ to 1 ½ in. in diameter, in the pavement surface. A popout is caused by soft or deleterious aggregate material in the PCCP surface that disintegrates in the presence of water or freeze-thaw conditions. A popout is considered an aesthetic problem and is not detrimental to the pavement's performance. A popout is not specifically repaired.

12. Punchout. A punchout is a failure in the pavement caused by insufficient structural strength at a localized area. This failure appears as a depression or hole in the pavement. The recommended treatment for a localized punchout is to remove the affected area and patch with PCCP patching. A pavement with significant areas of punchouts should be rehabilitated by using a slab-reduction technique and an overlay.

13. Transverse Cracking. A transverse crack is a random crack oriented predominantly across the pavement away from the planned joint locations. Transverse cracking is caused by poor construction techniques or improper joint design. Poor support, a poor mix design, improper mixture, improper subbase placement, or untimely sawing of the pavement can also cause random transverse cracking. The recommended treatment for random transverse cracking is to remove and replace the affected area, or a slab-reduction technique and an overlay.

14. Scaling. Scaling is the local flaking or peeling of a finished surface of hardened concrete as a result of freezing and thawing. Scaling may be caused by improper mix design, over-finishing during construction, or improper curing and the application of excessive or

detrimental deicing chemicals. The recommended treatment for severe scaling is to mill the surface and overlay the pavement. An isolated area of severe scaling can be corrected by diamond grinding. Moderate scaling is not repaired.

15. Spalling. Spalling is the raveling of concrete at a joint face or at steel reinforcement. Spalling may be due to improper sawing, improper concrete curing, excessive stress at the joint, or poor installation of load-transfer devices. The recommended treatment for severe spalling is to remove and replace the affected area and replace the joint material. Moderate spalling is not specifically repaired.

16. Structural Failure. Structural failure is a load-related distress indicated by map cracking of the entire pavement and is caused by insufficient thickness. The recommended treatment for structural failure is replacement of the pavement.

52-7.0 PAVEMENT SCOPING

Candidate projects are proposed by the Program Development Division or an LPA and evaluated for pavement treatment. Project scoping may be driven by non-pavement issues such as budget constraints, capacity, safety, drainage, short or long term needs, truck loadings, or geometric deficiencies. The intended project scope and its impacts on the existing or new pavement structure should be understood prior to developing the pavement-treatment recommendation. Pavement distresses described in Section 52-6.0 should be considered in determining the appropriate treatment for the project. Additional pavement investigation (i.e. core analysis, FWD, condition survey, etc.) of an existing pavement may be required to determine the appropriate pavement treatment including requirements for the milling of the existing pavement. Asphalt pavement will be milled prior to placing an overlay.

A pavement replacement project includes removal of the existing pavement structure, including subbase, and preparation of the subgrade prior to placing a new pavement structure. Pavement damage due to structural deficiencies should be reconstructed. A pavement that is structurally sufficient is a candidate for a rehabilitation-type project, a preventative-maintenance or functional-overlay type project. A pavement requiring 50 percent or more of it to be replaced is considered for reconstruction. All work being proposed for a project (i.e. sewer installation, added travel lanes, curve corrections, etc.) should be considered in evaluating the existing pavement.

A rehabilitation project utilizes the existing pavement structure to significantly extend the service life of an existing pavement. The pavement work on a rehabilitation project may include milling of the existing pavement, PCCP slab reduction, the placement of an overlay, or a combination of these elements.

A partial 3R project is intended to preserve and extend the service life of the mainline pavement and shoulders. A partial 3R project should be designed in accordance with Chapter Fifty-six. The pavement work on a partial 3R projects restores the riding or surface characteristics of the pavement to a near-new condition. Partial 3R work includes preventative maintenance, functional, or structural pavement treatments as described in Section 52-7.04.

Pavement recommendations are not required for a public-road-approach pavement or wedge on a bridge overlay project. The pavement design for a public-road-approach pavement should be in accordance with the INDOT *Standard Drawings.* The wedge should compensate for the bridge overlay grade raise. Detailed pavement design and analysis should be completed for other types of projects.

52-7.01 Pavement on New Alignment

A preliminary pavement thickness of 14 ± 2 in. should be used during the scoping of the project.

52-7.02 Pavement on Replacement Project

A statement should be made that the existing pavement structure must be removed and replaced. The preliminary pavement thickness for a replacement project will be 14 ± 2 in.

52-7.03 Rehabilitation Project

A rehabilitation project will include milling of an existing asphalt pavement. The pavement scope will include an approximate depth of milling.

Where rubblization is utilized as a slab-reduction technique, the pavement scope should state that a geotechnical investigation is required. For a rubblization project, the preliminary thickness for the replacement pavement will be 14 ± 2in.

For a concrete pavement where a slab-reduction technique is not used, the scope should include elements required to correct the surface deficiencies including milling and overlay requirements.

52-7.03(01) Falling-Weight Deflectometer Testing

The pavement designer should evaluate the need for FWD testing pertaining to concrete, asphalt, or composite pavement. The FWD data is used to evaluate the structural adequacy of an existing pavement section, to evaluate pavement shoulder adequacy for temporary traffic, or to provide an estimated quantity of underseal to be included in the plans for PCCP over dense-graded subbase. See Figure 52-7A for a sample Instructions for Listing Falling-Weight Deflectometer

(FWD) Testing Request form. An editable version of this form may also be found on the Department's website at www.in.gov/dot/div/contracts/design/dmforms/.

52-7.03(02) Pavement Coring

The pavement designer should evaluate the need for pavement coring. If cores are required, the information should be requested in advance of the date it is required for project development.

52-7.04 Partial 3R Project

The types of partial 3R projects are as follows:

52-7.04(01) Preventative Maintenance (PM) Treatment

A PM treatment is intended to arrest light deterioration, retard progressive damage, and reduce the need for routine maintenance. The proper time for PM is before the pavement experiences severe distress, structural problems, and moisture or aging-related damage. These activities can be cyclical in nature and may correct minor deficiencies for either a HMA or PCCP project.

The HMA PM treatments most commonly used are chip seals, crack sealing, micro surfacing, surface milling and thin HMA inlay, thin HMA overlay, sand seals, and routing and sealing cracks or joints.

The PCCP PM treatments most commonly used are sawing and sealing joints, retrofit joint load transfer, diamond grinding, and Concrete Pavement Restoration (CPR).

All treatments are described in detail in Section 52-11.0.

52-7.04(02) Functional Treatment

A functional treatment of an asphalt or PCCP pavement restores pavement smoothness to near-new condition on structurally-sufficient pavement.

An HMA functional treatment consists of an Intermediate course and a Surface course. The placement of the Intermediate course should be preceded by milling. The pavement should be designed in accordance with Section 52-9.0.

A PCCP functional treatment may consist of Concrete Pavement Restoration (CPR) to be used to correct functional distresses. CPR may consist of crack sealing, partial and full depth patching,

resealing of joints, undersealing, diamond grinding, or retrofit dowel bars. An HMA overlay may also be used.

52-7.04(03) Structural Treatment

A structural treatment of an asphalt or PCCP pavement strengthens the existing structure to current design requirements and restores the pavement smoothness to a new condition.

An HMA structural treatment will consist of Base, Intermediate, and Surface courses, with milling of the existing pavement. The pavement should be designed in accordance with Section 52-9.0.

A PCCP with structural failure may be rehabilitated with slab-reduction techniques such as cracking and seating or rubblization and overlay. For rubblization, the overlay thickness will depend on traffic count and the Production Management Division's Geotechnical Operations Team's recommendations. The HMA overlay pavement section for rubblization should be designed in accordance with Section 52-9.02(05).

52-7.05 Milling of Pavement

An asphalt or concrete pavement may be milled to remove distressed layers of material, make crown corrections, maintain curb height or vertical clearance, scarify existing surface, surface profiling, removal of asphalt overlay, or to provide a pavement transition in accordance with the INDOT *Standard Specifications*. The types of milling of pavements and their usages are as follows.

1. Asphalt milling is used to remove distresses near the surface of the pavement or prior to placing an HMA inlay.

2. Asphalt scarification or profile milling is used to roughen the surface or remove excessive crack sealant prior to placing an HMA overlay.

3. Asphalt-removal milling is used to remove asphalt materials down to a concrete or brick base.

4. PCCP milling is used to roughen the existing surface or to provide crown corrections prior to placing an overlay.

5. Transition milling is used to provide a transition to an adjoining section.

52-7.05(01) Asphalt Milling

Asphalt milling is intended to remove material from an existing pavement to a specified average depth by milling the surface and creating a uniform profile. An average depth of milling should be specified depending on the condition of the pavement or project requirements. Asphalt milling is used as follows:

1. prior to placing an HMA inlays;
2. removal of stripped or distressed asphalt;
3. correction of substandard cross slope or crown condition;
4. profile correction; or
5. maintaining vertical clearance or curb height.

The average milling depth specified will be sufficient to accommodate the HMA inlay or the removal of distressed materials. The average milling depths to be used will be 1, 1 ½, 2, 3, or 4 in.

For a variable milling depth to correct a cross-slope deficiency, the limits and associated milling depth must be shown on the typical cross sections in accordance with Section 52-13.0.

52-7.05(02) Asphalt Scarification or Profile Milling

Asphalt scarification or profile milling is used to provide a roughened texture to an existing surface. Asphalt scarification or profile milling will remove crack sealant to prevent slippage of the overlay materials, roughen the existing surface that has polished due to traffic, or correct minor profile or cross-slope deficiencies. Correction of minor cross-slope deficiencies is limited to a ¼-in. average rut depth determined by the INDOT pavement management system. Milling operations to correct pavement conditions that require deeper milling should be in accordance with Section 52-7.05(01).

Asphalt scarification or profile milling is used to prepare an existing pavement for a single-course HMA overlay. Asphalt scarification or profile milling is used to prepare an existing pavement for a functional overlay if the existing pavement has excessive crack sealant or requires minor profile corrections.

52-7.05(03) Asphalt-Removal Milling

Asphalt-removal milling is used to remove an entire asphalt overlay from a concrete or brick base. The project designer will designate the approximate existing asphalt thickness on the typical cross sections.

52-7.05(04) Portland Cement Concrete Pavement (PCCP) Milling

PCCP milling is intended to remove material from an existing PCC pavement to a specified average depth to create a uniform profile. An average depth of milling should be specified depending on the condition of the pavement or project requirements. Portland cement concrete milling is used as follows:

1. correction of substandard cross slope or crown conditions;
2. profile corrections;
3. maintaining vertical clearance or curb height; or
4. preparation for an HMA overlay.

The project designer will designate the average milling depth on the typical cross sections. For a variable milling depth to correct a cross-slope deficiency, the limits and associated milling depths must be shown on the typical cross sections in accordance with Section 52-13.0.

52-7.05(05) Transition Milling

Transition milling is used to provide a connection between an HMA overlay and an adjoining pavement, drive, paving exception, or public-road approach. The transition slope and notch depth in the existing asphalt or concrete pavement will be in accordance with the INDOT *Standard Drawings*.

52-8.0 PAVEMENT-DESIGN PROCEDURAL GUIDELINES

The pavement designer should determine the pavement type and thickness of the pavement structure based on subgrade conditions, materials, ESALs, and economic consideration. The pavement designer is also responsible for determining the grade of binder for a QC/QA-HMA project.

52-8.01 Pavement Designer

The Planning Division's Office of Pavement Engineering has responsibility for the pavement design of each Central-Office-developed Major New Program or Major-Project Preservation Program project with 5000 AADT or greater, or 500 ADTT Class 5 or greater. For a district-developed project with less than 5000 AADT and 500 ADTT, the pavement designer is the district pavement engineer, district Office of System Assessment manager, or the district Office

of Design manager. The Pavement Design Engineer is also available for consultation with each district for a project with less than 5000 AADT or 500 ADTT.

For a local-public-agency (LPA) project, the LPA's agent is the pavement designer. The Office of Pavement Engineering will review the pavement design.

52-8.02 Pavement-Design Request

A pavement-design request is to be submitted by the project manager or designer to the Pavement Design Engineer, or the district's pavement engineer. Each submittal will be prepared on the Pavement Design Request -- INDOT Project form in accordance with Section 52-14.0.

An LPA project utilizing federal funds designed by the LPA or its agent should be submitted to the Office of Pavement Engineering for approval. The proposed pavement design should be prepared on the Pavement Design Request -- LPA Project form in accordance with Section 52-14.0. A hardcopy of the DARWin output used to design the pavement should be submitted with the form.

A hardcopy or electronic copy of the form may be submitted. Electronic versions are available on the Department's website, at www.in.gov/dot/div/contracts/design/dmforms/html. Instructions for the completion of the form are included in Section 52-14.0.

52-8.03 DARWin Input

52-8.03(01) Simple ESAL Calculation

AASHTO's pavement-design computer program, DARWin, should be used for the design of a pavement. Recommended factors to be used with the Design Guide and input in DARWin are as follows.

1. Performance Period.

PCCP Pavement	30 years
PCCP over Existing Pavement	25 years
HMA Pavement	20 years
HMA Overlay on Rubblized PCC	20 years
HMA Overlay on Cracked and Seated PCC	15 years
HMA Overlay over Asphalt	15 years
HMA Overlay over PCCP	12 years

2. Two-Way Traffic (AADT). The total yearly volume in both directions of travel divided by the number of days in a year.

3. Number of Lanes in Design Direction. The total number of through lanes in the design direction.

4. Percent Trucks in the Design Lane.

   100% for a 2-Lane Road
   90% for a 4-Lane Road
   80% for a Road of 6 Lanes or More

5. Percent Trucks in Design Direction. For the percent trucks of AADT in the design direction, use 50%

6. Percent Heavy Trucks. The number of trucks, FHWA Class 5 or greater, as a percentage of the AADT.

7. Average Initial Truck Factor (ESALs per Truck) -- Equivalent Single Axle Load (ESAL). ESAL is defined as the amount of damage experienced by the subgrade due to a single 18-kip axle load. Damaging effects of an axle load may be represented by an equivalent number of 18-kip ESALs. The damage varies exponentially with an axle load different than 18 kip. The average ESAL per truck calculated from data collected on the State's roads is shown in Figure 52-8A.

8. Annual Truck Factor Growth Rate. Truck loading increases are computed periodically by INDOT through research projects and are reflected in the initial ESALs per truck. For DARWin input, use 0.0%.

9. Annual Truck Volume Growth Rate. The average annual increase in trucks. If the 20-year projected AADT is known, the growth factor is calculated using the equation as follows:

$$Growth\,Factor = \left(\frac{Design\,Year\,AADT}{Current\,Year\,AADT} \right)^{0.05} - 1$$

10. Growth. Use compound growth rate.

11. Total Calculated Cumulative ESALs. The total estimated ESALs during the design life of the project calculated by the DARWin program.

52-8.03(02) Flexible-Pavement Structural Design

1. Total Calculated Cumulative ESALs. The total estimated ESALs during the design life of the project calculated by the DARWin program.

2. Serviceability. The Present Serviceability Index (PSI) is a subjective rating of pavement ride quality. The scale varies from 5 to 0, where a 5 represents a perfect pavement and 0 represents a failed and totally impassable pavement. The original PSI concept was determined by averaging the results of a panel of raters riding on the pavement. PSI represents a means of using objectively-obtained data to estimate a subjectively based rating.

   a. Initial Serviceability. A new pavement is assumed to have an initial serviceability or PSI of 4.5.

   b. Terminal Serviceability. A rural pavement is considered to have reached its terminal serviceability if the index reaches 2.5 for a route functionally classified as a Major Collector or higher, or 2.0 for a Minor Collector or lower. An urban pavement is considered to have reached its terminal serviceability if the index reaches 2.5 for a route functionally classified as an Arterial, or 2.0 for a route functionally classified as a Collector or lower.

3. Reliability Level. Reliability is the probability that a roadway will achieve its design life. A higher reliability factor results in a greater chance that the pavement will be above the terminal serviceability at the end of the projected design life. The reliability factors are as follows:

Interstate Route:	98%
Urban Arterial:	95%
Other Route:	90%

4. Overall Standard Deviation. This value should be 0.35.

5. Roadbed Soil Resilient Modulus. The soil-support value is shown in the geotechnical report in terms of a California Bearing Ratio (CBR). The CBR is converted to a Resilient Modulus by multiplying the CBR by 1500 to obtain psi.

6. Stage Construction. A pavement is designed and constructed for its full 20-year expected life. Stage construction may be considered where a planned overlay is constructed at year *X* to complete the 20-year design. Stage construction is not considered and a value of 1 is used.

DARWin reports a design structural number for an HMA pavement. The structural number is equal to the summation of the thickness of each course of material times its layer coefficient per 1 in. of material. This summation should be equal to or greater than the design structural number. The following layer coefficients are used for the design value based on a 1-in. thickness of material.

HMA Surface	0.34
HMA Intermediate	0.36
HMA Base	0.34
Rubblized Concrete	0.20
Compacted Aggregate Base	0.14

The design thickness of each HMA mixture (surface, intermediate, and base) or compacted aggregate base in accordance with the Typical Pavement Sections shown in Section 52-13.0 are input into DARWin to calculate the equivalent structural number of a proposed section to compare to the computed design structural number determined by DARWin.

52-8.03(03) Rigid-Pavement Structural Design

1. Total Calculated Cumulative ESALs. The total estimated ESALs during the design life of the project calculated by the DARWin program.

2. Serviceability. The Present Serviceability Index (PSI) is a subjective rating of pavement ride quality. The scale varies from 5 to 0 where a 5 represents a perfect pavement and 0 represents a failed and totally impassable pavement. The original PSI concept was determined by averaging the results of a panel of raters riding on the pavement. PSI represents a means of using objectively obtained data to estimate a subjectively based rating.

    a. Initial Serviceability. A new pavement is assumed to have an initial serviceability or PSI of 4.5.

    b. Terminal Serviceability. A rural pavement is considered to have reached its terminal serviceability if the index reaches 2.5 for a route functionally classified as a Major Collector or higher, or 2.0 for a Minor Collector or lower. An urban pavement is considered to have reached its terminal serviceability if the index reaches 2.5 for a route functionally classified as an Arterial, or 2.0 for a route functionally classified as a Collector or lower.

3. 28-Day Mean PCC Modulus of Rupture. This value should be 650 psi.

4. 28-Day Mean Elastic Modulus of Slab. This value should be 3,500,000 psi.

5. Mean Effective *k* Value The soil-support value is shown in the geotechnical report in terms of a California Bearing Ratio (CBR). The modulus of subgrade reaction, *k*, for PCCP, is dependent upon factors besides roadbed soil resilient modulus. It should be determined by means of the procedure outlined in the AASHTO *Pavement Design Guide*, Part II, Chapter 3, Section 3.2.1, or the *Supplement* to the *AASHTO Guide*, Table 11.

6. Reliability Level. Reliability is the probability that a roadway will achieve its design life. A higher reliability factor results in a greater chance that the pavement will be above the terminal serviceability at the end of the projected design life. Reliability factors are as follows:

Interstate Route:	98%
Urban Arterial:	95%
Other Route:	90%

7. Overall Standard Deviation. This value should be 0.35.

8. Load Transfer Coefficient, *J*. Each pavement will be doweled. The *J* value should be as follows:

With Integral Curbs:	2.8
With Tied Concrete Shoulders:	2.8
With 14-ft Extended Lane:	2.8
With HMA Shoulders:	3.2

9. Overall Drainage Coefficient, C_d. This value should be 1.

10. Calculated Design Thickness. DARWin reports a design thickness of PCCP. The plan thickness to be used is shown in Figure 52-8B, PCCP Thickness.

52-9.0 PAVEMENT CROSS SECTION DESIGN

The factors to be considered in selecting pavement types include, but are not limited to, the scope of the project, Life-Cycle Costing analysis, and adjoining-pavement types. For a rehabilitation or partial 3R project, the factor to consider is the condition of the existing pavement and the scope of the project.

The pavement designer should design the pavement section for the type of projects determined by the scope of work. A new or proposed replacement or reconstructed pavement is designed for a 20- to 30-year design life. A functional or structural partial 3R project or rehabilitation project pavement is designed for a 10- to 30-year design life dependent on the base preparation. A Preventative Maintenance partial 3R project is intended to maintain the pavement in a serviceable condition for 4 to 12 years depending on the treatment.

A new pavement structure is designed for where a new roadway will be constructed or a replacement pavement structure is designed where the existing pavement is being removed and replaced. A pavement should be designed according to the AASHTO *Guide for Design of Pavement Structures* and should be detailed as shown in the Typical Pavement Sections included in Section 52-13.0. An approved geotechnical report and traffic data will be completed prior to submitting a pavement design request for each new or replacement pavement structure.

A rehabilitation design is the most varied and complicated of all pavement designs. An HMA overlay or PCCP over pavement is used where the existing pavement is not structurally sufficient. Rehabilitation of an asphalt pavement involves the placement of an overlay. Rehabilitation of PCCP may involve an overlay or an overlay over PCCP with slab reduction. Rehabilitation of a composite pavement should consider the required treatments for both asphalt and portland cement concrete pavements.

52-9.01 Aggregate Pavement

Requirements for Compacted Aggregate Pavement (CAP) are shown in the INDOT *Standard Specifications*. CAP is constructed on a prepared subgrade.

The subgrade should be designed in accordance with the Geotechnical Report and constructed in accordance with the INDOT *Standard Specifications*. The geotechnical recommendations may include a soil modification or stabilization process, Subgrade Treatment, or a Compacted Aggregate Stabilization Layer.

The designed thickness of CAP determined by DARWin is placed on the subgrade. The minimum CAP thickness is 12 in. The minimum CAP thickness is composed of 4 in. of compacted aggregate surface size No. 73 on 8 in. of compacted aggregate base size No. 53.

52-9.02 HMA Pavement

Requirements for HMA Pavement are shown in the INDOT *Standard Specifications*. HMA is constructed on a prepared subgrade.

The subgrade should be designed in accordance with the Geotechnical Report and constructed in accordance with the INDOT *Standard Specifications*. The Geotechnical Report will include recommendations for the subgrade treatment. The designed thickness of HMA or HMA on compacted aggregate base determined by DARWin is placed on the subgrade. The minimum HMA or composite HMA and compacted aggregate thickness is 12 in.

52-9.02(01) Mixture Designation

The project designer should determine whether to use Quality Control/Quality Assurance (QC/QA) HMA mixtures, or HMA mixtures, both as described in the INDOT *Standard Specifications*. The criteria for using QC/QA-HMA mixtures or HMA mixtures are based on the quantity of material to be used or at a high-stress location.

52-9.02(02) QC/QA-HMA Mixtures

QC/QA-HMA is specified for all but a small-quantities project, or where heavy traffic conditions require that the mixture be engineered to withstand the traffic-induced stresses. QC/QA-HMA should be specified for the following.

1. A mixture that exceeds one sublot of material. The INDOT *Standard Specifications* defines a sublot as 600 tons for a surface course or 1000 tons for a base or intermediate course.

2. An urban rehabilitation project that includes multiple- and closely-spaced intersections throughout the limits of the project.

3. An urban intersection project with ESALs > 3,000,000 that incurs increased stresses in the pavement caused by heavy, slow-moving, or stopped-traffic conditions. Mixtures placed off of the mainline are not required to be QC/QA. Where small quantities of mixture off the mainline are required, the project designer should evaluate the number of mixtures specified to limit the number of mixture designations required in the contract. Small-quantity mixture designations should be designated as described in Section 52-9.02(03) or included in like QC/QA pay items for the mainline.

4. A rural intersection project with ESALs > 3,000,000, that incurs increased stresses in the pavement caused by heavy, slow-moving, or stopped-traffic conditions, and are not part of an adjoining rehabilitation project. Mixtures placed off the mainline are not required to be QC/QA. Where small quantities of mixture off the mainline are required, the project designer should evaluate the number of mixtures specified to limit the number of mixture designations required in the contract. Small-quantity mixture designations

should be designated as described in Section 52-9.02(03) or included in like QC/QA pay items on the mainline.

5. The project is being phased as part of an overall project that has quantities which satisfy the minimum sublot criteria.

6. Open-graded mixtures, Intermediate OG 19.0 and OG 25.0, are independent of the ESALs and quantity.

The pay items for QC/QA-HMA mixtures specify the ESAL category, the high temperature performance grade, the mixture course, and the nominal size of the mixture. The size of the mixture is specified with a metric designation to agree with the AASHTO SUPERPAVE designations.

An example of a QC/QA-HMA pay item is shown below.

QC/QA-HMA,	_____,	_____,	_____,	_____ mm
	(ESAL Category)	(PG)	(Course)	(Mixture Size)

The ESAL categories are listed in Figure 52-9A, ESALs for QC-QA HMA Mixtures.

The high-temperature performance-grade binder will vary depending on the factors included in Section 52-9.02(04), and will be 64, 70, or 76. However, for a type OG mixture, the high-temperature performance-grade binder is 76. The low-temperature performance grade is not a design consideration. A value of -22 is specified in the INDOT *Standard Specifications.*

The course designation is the specific mixture and will be Surface, Intermediate, or Base.

The mixture designation will be the mixture designed. A Surface course will be either 9.5 or 12.5 mm mixture. An Intermediate course will be 12.5, 19.0, 25.0, OG 19.0, or OG 25.0 mm mixture. A Base course will be 19.0 or 25.0 mm mixture.

EXAMPLE: The pay item QC/QA-HMA, 4, 76, Surface, 9.5 mm represents a QC/QA HMA-mixture with less than 30,000,000 ESALs, a PG 76 high-temperature binder, a Surface course, and a Mixture Designation size of 9.5 mm.

The project designer should use the pay-item descriptions shown for QC/QA-HMA mixtures in the INDOT *Standard Specifications*.

52-9.02(03) HMA Mixtures

HMA is specified for a small-quantities project or where construction constraints require that the material be placed in non-uniform widths and thicknesses. HMA should be specified for a pavement section where none of the mixtures exceed one sublot of material.

For miscellaneous mixtures such as HMA for wedge and leveling, HMA for approaches, etc., the project designer should specify the applicable mixtures as listed in the INDOT *Standard Specifications.*

The pay items for HMA mixtures specify the type and course of material.

An example of an HMA pay item is shown below.

HMA, _____, _____
(Course) (Type)

The mixture type is determined from ESALs calculated for the project's pavement design. The type categories for HMA mixtures are listed in Figure 52-9B, ESALs for HMA Mixtures.

The course designation is the specific mixture and will be Surface, Intermediate, or Base.

EXAMPLE: The pay item HMA, Type B, Surface represents an HMA mixture for the range of $0.3 \leq \text{ESAL} < 3$, and Surface course.

The project designer should use the pay item descriptions shown for HMA mixtures in the INDOT *Standard Specifications*.

52-9.02(04) PG Binder and ESALs

The Performance Graded (PG) Binder for a QC/QA mixture is designed based on its performance-related properties determined for the project's climate (temperature) and location within the pavement structure. A Base mixture may require a lower high-temperature grade than the Surface or Intermediate mixtures. The PG binder should be adjusted based on the speed and amount of traffic for the project. For an HMA overlay, the type and condition of the existing pavement should also be considered. The computer program LTPPBIND should be used to select the grade of the PG Binder for a specific project. LTPPBIND may be downloaded from the website http://www.tfhrc.gov/pavement/ltpp/ltppbind.htm.

A PG binder is identified with high and low Celsius temperature values. For example, PG 70-22 identifies 70°C as the high-temperature design value and -22°C as the low-temperature design

value. The high-temperature value is the average seven-day maximum pavement temperature. The low-temperature value is the lowest air temperature recorded at the weather station(s) nearest the project site.

The binder-selection reliability is used to indicate the probability that the design high and low temperatures will not be exceeded during the design life. A value of 64, 70, or 76 should be used for the high-temperature design. A value of -22 will be used for the low-temperature design. The value selected for high temperature should be evaluated for 98% reliability. However, a temperature value satisfying 90% reliability may be considered for a low-ESAL roadway.

The PG binder for a QC/QA project will be identified in the pay-item designation. The INDOT *Standard Specifications* specify the PG binder for non-QC/QA mixtures.

The ESAL should be calculated using DARWin and the project's traffic data. ESAL should be calculated for 20 years regardless of the project's design life. ESAL should be rounded up to the nearest 50,000. The design level for ESAL will be identified in the pay-item designation.

Where shoulders are constructed full depth or where the shoulders will be used for maintenance of traffic, the shoulder ESAL will be the same as that for the mainline. Where shoulders are not constructed full depth and will not be used for maintenance of traffic, the ESAL will be 200,000.

For a project with HMA mixtures where ESAL have not been calculated as part of the pavement design process, the ESAL value from Figure 52-9B will be used to select the appropriate pay-item designation.

52-9.02(05) Asphalt-Pavement Rehabilitation

An asphalt-pavement structure identified as having distresses listed in Section 52-6.02 should be rehabilitated by means of the treatment recommended therein. The pavement designer will specify the type and limits of milling, and the type and thickness of an overlay. The existing pavement plus the proposed rehabilitation will be designed for structural sufficiency by computing the structural number of the existing pavement and comparing this number with the required structural number for the project. The layer coefficients for existing asphalt pavement should be reduced according to the AASHTO *Guide for Design of Pavement Structures*, Part III, Chapter 5, Table 5.2, Suggested Layer Coefficients for Existing AC Pavement Layer Materials.

52-9.02(06) Shoulders

For a HMA paved shoulder of 4 ft or narrower, the project designer should specify the same HMA pay-item designations and thicknesses as that used for the adjacent travel lane. For a

HMA paved shoulder wider than 4 ft, the project designer should specify the thicknesses and HMA pay-item designations for the appropriate ESAL level identified in the figures in Section 52-13.0.

For a HMA paved shoulder of 4 ft or narrower consisting of 660 lb/yd^2 over 6 in. of compacted aggregate, the project designer should specify the same HMA pay-item designation for the surface course as that of the travelway's HMA Surface course.

Shoulder corrugations should be in accordance with Section 45-1.02(06).

52-9.02(07) [Section Deleted]

52-9.02(08) HMA Mixture for Approaches

HMA mixture for approaches is a mixture designated for a drive, public-road approach, crossover, turn lane, acceleration or deceleration lane, mailbox approach on a non-paved shoulder, etc. It should be used for a short project where the HMA quantity is less than 200 tons, i.e., bridge replacement or overlay, small structure replacement, etc., where the paving involves a large amount of handwork or non-paving movement of the paver and rollers.

For a drive, public-road approach, or crossover, the limits and HMA section for HMA mixtures for approaches are shown on the INDOT *Standard Drawings*. Where the AADT exceeds the amount shown on the INDOT *Standard Drawings*, the HMA section must be determined in accordance with Section 52-8.0.

For a public-road approach, the limits for HMA mixtures for approaches may be extended to include up to an additional 100 ft of pavement to satisfy project requirements. If the project requires more than 100 ft of additional pavement, the public-road approach will be designed as HMA mixtures for approach. The additional pavement will be designed in accordance with Section 52-8.0.

For a HMA turn lane, HMA acceleration or deceleration lane, HMA wedges for a bridge deck overlay project, HMA approaches for a bridge-replacement project that requires less than 200 tons of HMA material, or HMA pavement less than 200 ft in length on a small-structure-replacement project, the pavement will be designed in accordance with Section 52-8.0 as HMA mixtures for approaches.

For a mailbox approach on a non-stabilized shoulder, HMA mixture for approaches should be used as specified on the INDOT *Standard Drawings*.

52-9.02(09) Widening with HMA

An existing pavement may be widened up to 5 ft on each side if widening with HMA. However, the minimum width of widening with HMA specified will be 2 ft for constructability purposes. This minimum width of widening may result in extra lane width or may require removal of existing pavement to satisfy the 2-ft minimum-width requirement. The longitudinal joint of the widened pavement should not be placed in the wheel path of the driving lane. The pay-item designation for this work will be Widening with HMA, regardless of the quantity involved.

If specific project widening requirements exceed 5 ft, the widened pavement area will not be specified as HMA widening, but will be identified as HMA pavement. The pay items specified will be either QC/QA-HMA or HMA in accordance with Section 52-8.0, and the excavation and subgrade treatment will be as described in the INDOT *Standard Specifications*.

52-9.02(10) Seal Coat

Seal coat is used to seal a shoulder, to seal a very low-traffic-volume roadway, or during construction to bond loose material to allow construction traffic to use the surface. The requirements for seal coat are shown in the INDOT *Standard Specifications*.

52-9.02(11) Prime Coat

Prime coat is required for a rubblized base that is to be overlaid. The prime coat binds the top portion of the rubblized base with the first HMA layer so that the HMA material will not slide relative to the base material during compaction of the HMA. Prime coat should not be specified to be placed on a compacted-aggregate base to be overlaid with HMA material. The requirements for prime coat are shown in the INDOT *Standard Specifications*.

52-9.02(12) Tack Coat

Tack coat is required beneath each course of HMA material that is placed on an existing pavement or newly-constructed HMA course. The tack coat binds the new HMA material to the material already in place. HMA or PCCP is to be tacked prior to placement of an HMA mixture. The requirements for tack coat are shown in the INDOT *Standard Specifications*.

52-9.03 PCCP Pavement

The requirements for PCCP are shown in the INDOT *Standard Specifications*. PCCP is constructed on a drainable subbase, Subbase for PCCP, or a dense subbase, Dense Graded Subbase, on a prepared subgrade.

The subgrade should be designed in accordance with the Geotechnical Report. The geotechnical recommendations may include a soil modification or stabilization process, subgrade treatment, or a compacted-aggregate stabilization layer.

Subbase for PCCP is placed on the subgrade and is composed of 3 in. of coarse aggregate size No. 8 on 6 in. of compacted aggregate size No. 53. The coarse aggregate size No. 8 is a permeable layer that collects and removes water entering the pavement subbase system. The compacted aggregate size No. 53 is a dense layer that separates the subgrade from water entering the pavement subbase system. Underdrains should be included where subbase for PCCP is specified. Dense-graded subbase is used under miscellaneous PCCP such as a drive, reinforced-concrete bridge approach, etc., or may be used where underdrains are not warranted. Dense-graded subbase is composed of 6 in. of compacted aggregate size No. 53.

The designed thickness of PCCP determined by DARWin is placed on the subbase for PCCP. The minimum PCCP thickness is 9 in. Transverse joints in the concrete pavement are spaced at 18 ft maximum and are constructed as contraction joints type D-1. The D-1 contraction joints shown in the INDOT *Standard Drawings* have variable-size dowel bars dependent on the PCCP thickness. The joint spacing should be modified to meet a drive, inlet, adjacent lane, etc., such that all joints are continuous across the entire width of pavement including shoulders. These added lengths of D-1 joints should be included in the contract quantities.

Non-standard joints are not to be used in a pavement without approval of the Department's Pavement Steering Committee. If a project designer desires to utilize non-standard pavement joints in an individual contract, a submittal should be made to the Committee through the Office of Pavement Engineering. The pavement designer should contact the Pavement Design Engineer to determine the required submittal contents. The Pavement Steering Committee may require the pavement designer to make a presentation to provide additional justification for the use of non-standard joints.

Quality Control/Quality Assurance (QC/QA) PCCP pay items and PCCP pay items as described in the INDOT *Standard Specifications* are used for a project specifying PCCP. The criteria for using QC/QA-PCCP or PCCP are based on the area of PCC pavement specified. For a project PCCP quantity of 6000 yd^2 or greater, the pay item should be QC/QA-PCCP. For a project PCCP quantity of less than 6000 yd^2, the pay item should be PCCP.

52-9.03(01) PCCP Rehabilitation

A PCCP rehabilitation consists of Concrete Pavement Restoration (CPR), preventative maintenance, functional treatment, structural treatment, or undersealing. CPR is used where the existing PCCP is structurally sufficient.

1. Concrete-Pavement Restoration. CPR of a PCCP may be used as recommended in Section 52-6.03 where the existing PCCP is considered to be structurally sufficient but has reduced serviceability. CPR alternatives are full or partial depth patching, diamond grinding, joint resealing, retrofit joint load transfer, shoulder restoration, slab stabilization (undersealing), longitudinal crack and joint repair, overlay, or combinations of these alternatives.

   The condition of the driving lane of PCCP is an indicator of the project's suitability for CPR. FWD testing and core investigation for "D" cracking at joints should be completed. A PCCP where cores indicate a "D" cracking distress is not a candidate for CPR, functional, or PM treatment.

   The limitation of patching for distresses other than "D" cracking for each pavement treatment is based on the full-depth patching area required. The limits of the full-depth patching for each treatment are listed in Figure 52-9C, PCCP Patching Limits.

2. Preventative Maintenance. A preventative maintenance treatment is specified for rehabilitation of a pavement with distresses listed in Section 52-6.03. A preventative maintenance treatment may consist of HMA over concrete, diamond grinding, PCCP patching, or joint repair.

3. Functional Treatment. A functional treatment is specified for rehabilitation of pavement with distresses listed in Section 52-6.03. A functional treatment may consist of HMA over concrete, diamond grinding, PCCP patching, or joint repair.

4. Structural Treatment. A structural treatment is specified for rehabilitation of pavement with distresses listed in Section 52-6.03. A structural treatment may consist of HMA over concrete or PCCP over concrete in accordance with Section 52-9.04. The pavement designer will specify the limits of milling, if required, and the HMA overlay or PCCP thickness. The existing pavement plus the proposed rehabilitation will be designed for structural sufficiency by computing the effective thickness of the existing pavement and comparing this number with the required thickness for the project. The effective thickness for existing PCCP should be determined according to the AASHTO *Guide for Design of Pavement Structures*, Part III, Chapter 5, Sections 5.6, 5.8, and 5.9, or the Supplement to the *Guide*.

5. Undersealing. Undersealing consists of a localized activity where a fluid material is pumped under the concrete slab to add support and to fill voids under the pavement.

PCCP or asphalt over PCC composite pavement should be tested with a FWD as described in Section 52-7.03(01) to determine size and limits of voids underlying the pavement.

FWD testing must be requested 4 to 6 months in advance of the Ready For Contract date, depending on the time of year. See Figure 52-7A for FWD test request procedure and request form.

FWD testing cannot be performed during the winter months. The District should coordinate traffic-control activities for the FWD testing.

The cost of the recommended rehabilitation should be compared to the cost of replacing the existing pavement or an alternate rehabilitation technique using life-cycle cost analysis.

52-9.03(02) Curbs and Shoulders

PCCP is constructed with either integral concrete curbs, a widened outside lane with HMA shoulder, or tied full-depth concrete shoulders. The integral curbs, widened outside lane, or tied shoulders stiffen the outside edge of pavement to reduce deflections. D-1 joints are required across the entire PCCP. Compacted aggregate or geotextile should be specified alongside PCCP curbs or shoulders to prevent erodible material from infiltrating the underdrain system. The typical sections for PCCP shoulders are included in Section 52-13.0.

52-9.03(03) Reinforced-Concrete Bridge Approach (RCBA)

The requirements for a RCBA are shown in the INDOT *Standard Specifications*. RCBA is constructed on dense graded subbase on prepared subgrade.

A RCBA is used at a bridge to transition from PCC or HMA pavement to the bridge deck or mudwall. For PCCP, the RCBA spans from the sleeper slab to the pavement ledge on the mudwall. For HMA pavement, the RCBA spans from the end of the HMA pavement to the pavement ledge on the mudwall. The RCBA is reinforced to account for unsupported conditions due to settlement at the end bent or abutment. The RCBA and reinforcing-steel details are shown on the INDOT *Standard Drawings.*

52-9.04 Composite Pavement

The design elements of composite pavements will be determined based on the scope of the project determined from Section 52-7.0.

52-9.04(01) New Construction

HMA over aggregate composite pavement will be designed as flexible pavement in accordance with Section 52-8.0 and is limited to a project with less than 1 million ESALs. See Figure 52-13E in the Typical Pavement Sections for specific details.

The project designer should use the appropriate mixture designations shown for QC/QA-HMA or HMA mixtures in accordance with Section 52-9.02. The compacted aggregate should be as designed within the limits shown in the Typical Pavement Sections.

52-9.04(02) Rehabilitation

HMA over asphalt and PCC composite pavement will be designed to match the existing pavement. If widening of the pavement is needed and the existing subbase is open graded, the widened PCC base will utilize Subbase for PCCP. If the existing subbase is dense graded, the widened PCC base will utilize Dense Graded Subbase. The minimum width of PCC base widening is limited to pavement widening less than or equal to 5 ft. An existing pavement may be widened up to 5 ft on both sides with PCC Base. The pay-item designation of this work will be Widening with PCC Base in accordance with the INDOT *Standard Specifications*. For constructability purposes, widening should be a minimum of 2 ft. The longitudinal joint of the widened PCC Base should not be placed in a wheel path of a travel lane.

If the existing pavement has open-graded subbase with underdrains, the existing longitudinal underdrain system will be perpetuated with additional outlets added in accordance with Section 52-10.0. If the existing pavement has dense graded subbase, underdrains will not be added.

The existing asphalt over PCC composite pavement should be milled not less than 1 in. in accordance with Section 52-7.05, and prepared in accordance with the INDOT *Standard Specifications*.

52-10.0 UNDERDRAINS

An underdrain is perforated pipe and coarse aggregate installed longitudinally in the vicinity of a pavement edge. The purpose of an underdrain is to remove water from the subgrade and the pavement structure.

52-10.01 Definitions

Aggregate for Underdrain. Coarse aggregate size No. 8 or 9 used to backfill an underdrain pipe trench.

Dual-Access Underdrain. A run of underdrain that features outlet pipes connected to both ends of the underdrain pipe. The dual-access outlet pipes are installed to provide access to the underdrain pipe for inspection and maintenance purposes.

Geotextile for Underdrain. An engineered geotextile fabric used to prevent soil particles from contaminating an underdrain pipe and aggregate for underdrain.

HMA for Underdrain. An open-graded HMA used to patch an existing asphalt shoulder over a retrofitted underdrain pipe or an outlet pipe.

Intercept Elevation. The invert elevation at the connection between an underdrain pipe and a PVC connection at a drainage structure or outlet pipe.

Intercept Station. The station at which the connection between an underdrain pipe and a PVC connection at a drainage structure or outlet pipe occurs.

Obstacle. A project feature, such as a paving exception, bridge, culvert, etc., that prevents the continuous installation of underdrain pipe.

Outlet Elevation. The invert elevation of an outlet pipe or PVC pipe connection where the collected water leaves the outlet pipe.

Outlet Pipe. A non-perforated pipe that conveys water collected by the underdrain pipe to a side ditch, median ditch, or drainage structure. An outlet pipe may also be installed at the high end of an underdrain pipe to create a dual-access underdrain.

Outlet Protector. A concrete slab constructed on a sideslope to protect the outlet-pipe end.

Outlet Station. The station where an outlet pipe discharges to the sideslope or is connected to a drainage structure.

Retrofitted Underdrain. An underdrain pipe installed along an existing pavement edge in conjunction with a pavement-rehabilitation operation, such as rubblization, cracking and seating, or overlaying.

Single-Access Underdrain. A run of underdrain that features an outlet pipe connected to the low end of the underdrain pipe only.

Special Underdrain. An underdrain pipe installed at a specified slope that is not parallel to the pavement profile, resulting in an installation that varies in depth along its length.

Tangent Grade. The specified grade between two adjacent points of vertical inflection (PVIs) on the vertical alignment of the proposed pavement.

Underdrain Pipe. A perforated pipe installed at the bottom of a longitudinal underdrain trench.

Underdrain Run. An individual segment of underdrain pipe and its associated outlet pipe or pipes.

Underdrain System. The system that collects water from the subgrade and pavement structure and conveys it to the drainage system. Underdrain-system elements include the underdrain trench, underdrain pipe, aggregate for underdrain, geotextile for underdrain, outlet pipe, etc.

Video Inspection. The process of inspecting an individual underdrain run after installation using a video camera.

52-10.02 Existing Underdrain Perpetuation

A roadway with existing underdrains should have all outlet pipes perpetuated as part the work. The project designer should determine if existing underdrains are present, and locate all existing outlet pipes to evaluate them for needed maintenance or repair. Required repair or maintenance, such as unearthing and replacing an outlet pipe or reconstructing an outlet protector should be included in the proposed work.

52-10.03 Underdrain Warrants

Underdrains are required for each project, including an LPA project, which satisfies either of the following conditions.

1. Project with a design-year Average Annual Daily Truck Traffic (ADTT) volume of 100 per day or greater, and a net paving length of at least 2500 ft.

2. Project where the pavement sections adjacent to the project area have existing underdrains.

Underdrains are also required where using subbase for PCCP, HMA class OG mixtures, or where an existing PCCP is to be cracked and seated or rubblized.

Underdrains are not utilized on a preventative maintenance or functional treatment project, as defined in Sections 52-7.04(01) and 52-7.04(02), respectively.

52-10.04 Design Criteria

52-10.04(01) Slope

1. Underdrain Pipe. Where the tangent grade is 0.2% or steeper, the underdrain pipe will be installed at a fixed depth below the pavement. Where the tangent grade is flatter than 0.2%, special underdrains are required. The special underdrain slope should be 0.2% or steeper.

2. Outlet Pipe. The flattest outlet pipe slope permitted is 0.3%.

52-10.04(02) Size

1. Underdrain Pipe. Construction of new pavement requires underdrain pipe of 6 in. diameter. Rehabilitation of existing pavement requires underdrain pipe of 4 in. diameter.

2. Outlet Pipe. Outlet pipe of 6 in. diameter is required. If underdrain pipe of 4 in. diameter is required, outlet pipe fittings will be utilized to increase the outlet pipe size to 6 in.

52-10.04(03) Outlet Spacing

An outlet pipe is required at the low point of a sag vertical curve. It is also required at other low points encountered along the vertical alignment, such as the project beginning or ending point, or an obstacle location.

Additional outlet pipes are likely to be required throughout the project limits. The maximum underdrain-pipe length should not exceed 600 ft. If the proposed underdrain-pipe length is greater than 400 ft, a dual-access underdrain is required. If the outlet spacing results in an underdrain-pipe length that is 400 ft or less, a single-access underdrain may be utilized.

52-10.04(04) Location

An underdrain, where warranted in accordance with Section 52-10.03, should be constructed along each pavement edge. The underdrain should be continuous through each intersection,

ramp, turn lane, taper, etc., and should be located in the pavement section as shown in Section 52-13.0. For an approach where an underdrain is warranted in accordance with Section 52-10.03, the underdrain should extend from the mainline underdrain to the limit of the new approach pavement.

1. Underdrain Pipe. The underdrain-pipe location within each proposed cross section should be in accordance with Section 52-13.0.

   If an inlet, catch basin, manhole, or similar structure is located along the alignment of an underdrain pipe, the underdrain pipe may be connected directly to the drainage structure. The connection should be at least 6 in. above the structure invert elevation.

   A direct connection of an underdrain pipe to a pipe culvert or a precast-concrete culvert should be avoided.

2. Outlet Pipe. The connection between an outlet pipe and an underdrain pipe should be as shown on the INDOT *Standard Drawings*. Ninety-degree elbows or tees should not be utilized in these connections.

   One of the 45-deg elbows may be omitted if necessary to provide a satisfactory outlet.

   Separate outlet pipes should be provided for each underdrain pipe. Outlet pipes for adjacent underdrain pipes at a sag-vertical-curve low point or for adjacent dual-access underdrains should be installed in a common trench as shown on the INDOT *Standard Drawings*. Outlet pipes installed in a common trench should outlet at the same elevation.

   The outlet elevation should be at least 2 ft above the flowline elevation of a side ditch, 3 ft above the flowline elevation of a median ditch, or 6 in. above the invert elevation of an inlet, catch basin, manhole, or similar structure.

   If an underdrain pipe has no suitable outlet available at an adjacent ditch line or drainage structure, the outlet pipe may be installed under the pavement to an acceptable outlet on the opposite side of the roadway. The outlet-pipe installation should be designed so as not to conflict with the underdrain-pipe installation along the opposite pavement edge.

52-10.04(05) Backfill

1. Underdrain Pipe. Aggregate for underdrain is used to backfill an underdrain pipe trench. A retrofitted underdrain requires HMA for underdrain for patching an existing asphalt shoulder above the underdrain-pipe trench as shown on the INDOT *Standard Drawings*.

2. Outlet Pipe. Outlet-pipe backfill includes structure backfill and suitable material placed as shown on the INDOT *Standard Drawings.* HMA for underdrain is required for patching an existing asphalt shoulder above the outlet-pipe trench associated with a retrofitted underdrain as shown on the INDOT *Standard Drawings*.

52-10.04(06) Outlet Protector

An outlet protector is required at each location where an outlet pipe intersects a median or side slope. An outlet protector may contain two outlet pipes.

The INDOT *Standard Drawings* include details for each available protector type.

Figure 52-10A, Outlet-Protector Slope Limits, includes acceptable slopes for construction of each outlet-protector types.

The outlet protector selected should be the largest protector appropriate for the proposed slope that can be constructed considering all conflicts to the outlet location.

52-10.04(07) Geotextile for Underdrain

There are two applications where geotextiles are used in conjunction with underdrain-pipe installation. The first application is as an underdrain-pipe trench liner. Trench lining should only be used if the geotechnical report recommends such an installation or if it can be verified by other means that silt or loam soils exist within the project limits. The second application for geotextile is to prevent the contamination of the underdrain-pipe backfill during the construction of embankment behind a concrete curb. Installation of the geotextile should be in accordance with Section 52-13.0, and is required in conjunction with curb construction above an underdrain pipe.

52-10.04(08) Video Inspection

Video inspection of an underdrain system should be included in each project with at least 2500 ft of underdrain pipe. The contract quantity should be as shown in Figure 52-10B, Video Inspection Pay Quantities.

52-10.05 Contract-Document Preparation

52-10.05(01) Plans

Information related to underdrains should be shown on the following sheets.

1. Typical Cross Sections Sheet.

    a. The underdrain pipe location as illustrated in Section 52-13.0
    b. Underdrain-pipe trench and backfill details

2. Plan and Profile Sheet. Special-underdrain limits should be shown on the profile portion of the sheet.

3. Detail Sheets. All project-specific details should be shown on these sheets.

4. Underdrain Table.

    a. Underdrain Pipe.
        (1) Beginning and ending stations
        (2) Flowline elevations at beginning and ending stations
        (3) Pipe size
        (4) Special-underdrain grade, if applicable
        (5) Pipe quantity
        (6) Aggregate for underdrain quantity
        (7) HMA for underdrain quantity
        (8) Geotextile for underdrains quantity

    b. Outlet Pipe.
        (1) Outlet station
        (2) Outlet elevation
        (3) Intercept station
        (4) Intercept elevation
        (5) Outlet protector or structure number at outfall
        (6) Outlet ditch or drainage structure invert elevation at outfall
        (7) Pipe quantity
        (8) Structure-backfill quantity
        (9) HMA for underdrain quantity

    c. Outlet Protectors.
        (1) Outlet protector type
        (2) Outlet protector location
        (3) Outlet protector quantity

52-10.05(02) Specifications

Requirements for underdrains are shown in the INDOT *Standard Specifications.*

52-10.05(03) Standard Drawings

Details for underdrains and outlet protectors are shown on the INDOT *Standard Drawings*.

52-10.05(04) Pay Items

The project designer should determine the contract quantities for the appropriate pay items associated with the underdrain construction. The pay items include Pipe, Type 4, Circular, ___ mm; Pipe, Underdrain Outlet, 6 in.; Aggregate for Underdrain; Structure Backfill; HMA for Underdrain; Geotextile for Underdrain; Outlet Protector, ___; and Video Inspection.

52-11.0 PREVENTATIVE MAINTENANCE

Preventative Maintenance (PM) is a pavement-surface treatment used to preserve and extend the service life of a pavement. A PM project is intended to arrest light deterioration, retard progressive damage, and reduce the need for routine maintenance. The proper time for PM is before the pavement experiences severe distress, structural problems, and moisture- or aging-related damage. These activities can be cyclical in nature and may correct minor deficiencies as a secondary benefit. A PM project should improve high-stress areas or localized problems.

A PM treatment is not used where the scope of work is to correct pavement cross slope, horizontal alignment, vertical alignment, superelevation problems, placement of a turn lane or auxiliary lane, improvement of public-road approach or drive, or guardrail adjustment or repair. A PM project may include incidental enhancements or combinations at an isolated location in accordance with Chapter Fifty-six.

The most commonly used PM treatments are as follows:

1. Chip Sealing. Chip sealing is the full-width treatment of the surface with hot asphalt material and coarse aggregate to prevent deterioration of the surface. It provides waterproofing, low-severity crack sealing, and improved friction. The pavement section should show no structural deficiencies prior to chip sealing. For PM, the seal coat should be placed before cracks become braided or depressed, or patching is needed. A

previously chip sealed surface may be chip sealed a second time. Criteria for selecting a pavement section for chip sealing are as follows:

a. AADT < 2000 (higher volume, if traffic can be controlled);
b. on alligator cracking;
c. Pavement Condition Rating (PCR) between 80 and 90 with only moderate cracking;
d. roughness (PSI) > 3.0;
e. rutting < ¼ in.; and
f. typical surface age of 5 to 8 years.

2. Crack Sealing. Crack sealing is the cleaning and sealing of open cracks or joints in asphalt pavement and shoulders to prevent the entry of moisture and debris. Cracks or joints should be cleaned out and sealed on a 1- to 3-year cycle. Cleaning may be accomplished by sawing or routing. This work should be scheduled in the cooler months once the pavement has contracted and the cracks or joints have widened.

3. Microsurfacing. Microsurfacing is a thin polymer-modified asphalt emulsion mixture. Microsurfacing may be used for the texturing, sealing, or filling of ruts. An existing pavement should have no large cracks or excessive irregularities such as shoving. Cores should be taken to determine the void content of the existing-pavement layers to determine the stability and permeability of the existing pavement. The cost of microsurfacing should be compared to a conventional 165 #/syd thin HMA inlay and its required milling. An overlay should be used based on its structural value unless the microsurfacing is more economical. Core data and cost data should be reviewed with the Office of Materials Management's Asphalt Team for specific recommendations.

4. HMA Inlay. A thin HMA inlay, or milling and filling, consist of milling the existing surface and replacing it with a new asphalt surface to the original surface elevation. For PM, the surface condition may have minor defects but should not have significant potholes, depressed cracks, or major distresses. Correct timing of the treatment is critical to its longevity. Criteria to be used in considering a thin HMA inlay are as follows:

a. corrugations or washboarding in the surface course;
b. Pavement Condition Rating (PCR) 75 to 85 with no structural defects;
c. roughness (PSI) 2.5 to 3.5;
d. rutting > ½ in.;
e. surface friction improvement; and
f. typical surface age of 7 to 10 years.

5. HMA Overlay. A single-course 165 #/syd HMA overlay may be used as a PM treatment if applied in a timely manner. This application may be used to preserve rideability or

correct minor surface problems. The criteria to be used in considering a thin HMA overlay are as follows:

a. extensive raveling or weathering of the surface;
b. pavement Condition Rating (PCR) 75 to 85 with only moderate cracking;
c. PM on a lower-traffic-volume road over existing successive chip seals to restore rideability;
d. roughness (PSI) < 3.0; and
e. rutting < ½ in.

6. Sand Sealing. Sand sealing is a continuous full-width sealing of the surface with hot asphalt material and fine aggregate to prevent deterioration. It provides waterproofing, low-severity crack sealing, and improvement of the surface by mitigating the effects of aging. The criteria for the use of sand sealing are similar to those for chip sealing. However, a surface being sand sealed may have more low-severity cracks. Sand sealing may be more cost effective than crack sealing if extensive amounts of tight fine cracks require manual sealing. Sand sealing should not be placed on an existing sand-mix surface.

7. Asphalt Sawing and Sealing Joints. Sawing and sealing maintains neat-line reflective cracks or construction joints where a planned crack can be formed by sawing to provide a reservoir for the sealant. This technique is used for sealing cracks on a newer HMA surface where single relatively straight joints or reflective cracks have developed. This PM treatment may be periodic once more cracks develop as the pavement ages, but is performed within the first four years of the surface life.

8. PCCP Sawing and Sealing Joints. Contraction joints and longitudinal joints on concrete pavement should be inspected periodically and cleaned and resealed as required. For PM, timely sealing of the joints prevents dirt and moisture from entering the joints. Rigid pavement, 8 to 10 years old, should be inspected. If, on inspection, 10% of the joints have loose, missing, or depressed sealant, sawing and sealing of the joints should be considered. The joints should be sawed to remove old sealant and cleaned to reshape the joint seal reservoir.

9. Retrofit Joint Load Transfer. Retrofit joint load transfer consists of the retrofitting of dowels in jointed PCCP to re-establish load transfer across the contraction joints or random cracks. The pavement performance is improved by means of reducing pumping, corner breaks, or faulting. This work consists of the cutting of slots, placing new dowels or reinforcing bars therein, then cementing them into place. Life-cycle cost analysis should be applied to check for the cost-effectiveness of this PM treatment.

10. Diamond Grinding. Diamond grinding is a procedure used to restore or improve pavement rideability by removing surface defects that develop based on traffic loading and environmental conditions. As traffic, primarily trucks, uses the roadway and encounters deteriorated joints or other surface defects, the trucks begin to bounce vertically resulting in accelerated dynamic loading of the pavement. The increased loading in the pavement consequently increases the rate of deterioration and further reduces the serviceability, increases user costs, and increases maintenance costs. Diamond grinding enhances surface friction of an existing pavement surface. The resulting corduroy-like surface provides ample channels for water to escape the surface resulting in reduced hydroplaning potential. Diamond grinding is recommended to restore rideability if faulting exceeds ½ in. for 20% of the joints, and the pavement terminal serviceability index (PSI) does not drop below 3.5.

11. Drainage Inspection and Cleaning. Drainage inspection and cleaning consists of the inspection of drainage structures, e.g., underdrain outlets, ditches, catch basins, inlets, and the cleaning of these structures to maintain or restore the flow of water. The locations of underdrains should be identified and the outlets periodically cleaned. The INDOT *Maintenance Management Field Operations Handbook* provides for drainage inspection and cleaning details.

52-12.0 LIFE-CYCLE COSTS

52-12.01 General Discussion

The material that appears below represents the methodology to perform a Life-Cycle Cost Analysis (LCCA) for a pavement project. It is not all-inclusive, and resources are available for further explanation of the subject, such as FHWA SA-98-079, *Life-Cycle Cost Analysis in Pavement Designs*.

Life-Cycle Cost Analysis is an economic evaluation technique that builds on the principles of economic analysis to evaluate the overall long-term solutions for each type of project. LCCA considers initial and future agency, user, and other relevant costs over the life of alternatives discounted to provide comparative costs. This technique allows a project's cost to be compared over a specified time period. The selection of design alternatives should be made based on a LCCA sensitivity analysis for pavement-life costs. The Department recommends that a LCCA be completed on a project which includes more than one feasible alternative.

In the simplest situation, a LCCA evaluates costs associated with two or more particular strategies or design scenarios over an analysis period including the initial construction and at least one succeeding rehabilitation activity. These costs for the alternate scenarios or money flows are discounted to the present time. A comparison of the net present value of the scenarios

is made to provide information regarding one of the factors involved in the selection of a pavement design.

The economic evaluation of two feasible design strategies or design scenarios has no relation to the method of financing, or the total cost of the project. Inflation is not a factor in the evaluation since two or more scenarios' cash flows are being compared over the same time period with presumably the same inflation effects. Constant real dollars should be used in the LCCA, then the budget analysis should decide funding sources, inflation rate, and cash-flow requirements.

One of the common terms for this method of analysis is the Equivalent Uniform Annual Cost (EUAC) method. It incorporates the initial capital costs and adds the value of future cash flows into equal annual payments over the analysis period. This analysis technique does not determine if a project may be economically feasible. Two scenarios being evaluated with a total net present value within 10% are considered to be essentially the same. Other factors should be used to make the final selection such as initial costs, constructability, work-zone traffic control, user delay costs, etc.

52-12.02 Definitions

52-12.02(01) Analysis Period

The analysis period is the number of years over which the pavement analysis is conducted. The analysis period should include the initial pavement cost and the cost of at least one subsequent rehabilitation. The analysis period should be 40 years.

52-12.02(02) Discount Rate

The discount rate is used to equate the cash flows to present worth and determine EUAC. For general purposes, a 4% discount rate can be assumed. However, a range of rates from 0% to 10% should be used to determine if the alternate scenarios are discount-rate sensitive. The results of the sensitivity analysis should be shown.

52-12.02(03) Equivalent Uniform Annual Cost (EUAC)

The *EUAC* is the combining of initial capital costs and all future expenses into equal annual payments over the analysis period. The equation uses the Capital Recovery Factor and is shown below.

$$EUAC = (PW)\left[\frac{i(1+i)^n}{(1+i)^n - 1}\right]$$

Where: PW = present worth
i = discount rate
n = number of years from year zero.

52-12.02(04) LCCA Design Life

LCCA design life is the estimated service life of the pavement. For LCCA purposes only, the design life shown in Figure 52-12C, LCCA Pavement Design Life, should be used for the initial, maintenance, or rehabilitation options.

The estimated design life may be varied based on engineering judgment of the existing conditions, past performance, or the condition of the drainage system. The design life of the pavement should be varied to test the LCCA for sensitivity. The design life used for the sensitivity analysis should be documented.

The Office of Pavement Engineering will maintain a listing of the costs for maintenance or rehabilitation options identified as part of the proposed LCCA. The pavement designer should utilize these costs to compare life cycle costs of different pavement treatments.

52-12.02(05) Life-Cycle Cost

The life-cycle cost is the total of the costs associated with a pavement over a set period of time. The costs include the initial capital cost of construction, future maintenance, and future rehabilitation. The life cycle cost may also include user-delay costs during construction and maintenance, user vehicle operating and accident expenses, engineering fees, or other expenditures over the life of the pavement. It will also include the residual value, or salvage value of the pavement, at the end of the time period. The initial construction cost and subsequent maintenance and rehabilitation costs are the most reliable costs to use. The pavement designer should use the performance years of the rehabilitation alternatives over the life of the pavement.

The cost of work-zone traffic control and the cost of user delays during construction between designs may have a significant effect on the analysis. These costs should be quantified for the designs.

LCCA costs include the following:

1. initial construction;

2. subsequent maintenance or rehabilitation options;
3. salvage value;
4. work-zone traffic controls;
5. traffic delay and queue time;
6. detours;
7. accelerated construction costs, A+B bidding;
8. complications of interchanges, bridges or phasing; and
9. benefits as a negative cost where alternatives have quantifiable amounts and can be treated equally.

52-12.02(06) Present Worth (PW)

The *PW* is the value of money at year zero of future expenditures. The future cash flow is discounted by the discount rate to determine *PW*. The equation for the present worth of a future outlay is as follows:

$$PW = F\left[\frac{1}{(1+i)^n}\right]$$

Where: F = future construction cost
i = discount rate
n = number of years from year zero.

52-12.02(07) Salvage Value (SV)

Salvage value is the residual value of the pavement's remaining service life at the end of the analysis period. As an example, if the pavement surface has five years of remaining life at the end of the analysis, the pavement has a remaining value which has not been used. The Department defines *SV* as the construction cost of the last cycle times the ratio of the remaining service years to the last cycle design life. The *SV* of the pavement is calculated from the equation as follows:

$$SV = (\$)\left(\frac{RL}{DL}\right)$$

Where: \$ = last cycle construction cost
RL = remaining service life, years
DL = last cycle design life, years

52-12.03 Analysis Steps

1. Determine the feasible alternatives for construction, subsequent maintenance, and rehabilitation options. The design life of each action should be determined. The alternatives and their application time will aid in determining the total analysis period for LCCA. The design life should include at least one subsequent rehabilitation. Therefore, the analysis period may not be the same for each project. However, each alternative should have the same analysis period.

   A graphic activity time line for each alternative is a useful tool to show the different scenarios over the analysis period as shown in Figure 52-12A, Activity Time Example with Cash Flow.

2. Calculate the costs of the alternatives and subsequent maintenance and rehabilitation options using only those costs unique to each alternative. Like costs in each alternative will result in a net zero difference and should be neglected. For example, if two alternatives have similar traffic control, these costs need not be calculated, since a $100,000 crossover in each is a net zero difference in present worth. Costs of future rehabilitations should be calculated using present-day dollars. The net cost of each action may be displayed on the graphic activity time line to show the cash flow.

3. Calculate the present worth based on the time and future cost of each net expenditure. A range of discount rates is recommended to determine the sensitivity between different alternatives. For example, if alternate A at 2% discount and 8% discount is less expensive than alternate B at the same rates, the discount rate does not change the outcome.

4. Calculate the total present worth and *EUAC* for each alternative. The *PW* costs and *EUAC* may be compared to rank the alternatives. A graph of the *EUAC* for each alternative at each interest rate is useful to show the different rates. For an example, see Figure 52-12B, Annual Cost Comparison, Life-Cycle Resurface, Alternates 1 and 2.

5. Complete the LCCA documentation by listing time of treatments, cost estimate, *PW*, *EUAC*, and discount-rate sensitivity.

52-13.0 TYPICAL PAVEMENT SECTIONS

52-13.01 HMA Pavement

Typical HMA mainline pavement sections are shown in Figures 52-13A through 52-13E.

52-13.02 PCC Pavement

Typical PCC mainline pavement sections and joints locations are shown in Figures 52-13F through 52-13H. Joints locations are shown in Figure 52-13R.

52-13.03 Miscellaneous Pavement Sections and Details

Overlay sections for an Interstate-route or a divided-roadway pavement are shown in Figures 52-13 I and 52-13J.

Underdrain details are shown in Figures 52-13K through 52-13Q.

Ramp sections are shown in Figures 52-13S through 52-13U.

Concrete-curb sections are shown in Figures 52-13V and 52-13W.

Parking-lot sections are shown in Figure 52-13X.

52-14.0 PAVEMENT DESIGN REQUEST AND INSTRUCTIONS

A pavement design request should be submitted on the appropriate forms to the appropriate pavement designer as described in Section 52-2.0. Instructions for completing the forms are shown in Section 52-14.03.

52-14.01 Pavement Design Request for INDOT Project

A Pavement Design Request instructional form for an INDOT project is shown as Figure 52-14A. An editable version of this form may also be found on the Department's website at www.in.gov/dot/div/contracts/design/dmforms/.

52-14.02 Pavement Design Request for Local Public Agency Project

A Pavement Design Request instructional form for an LPA project is shown as Figure 52-14B. An editable version of this form may also be found on the Department's website at www.in.gov/dot/div/contracts/design/dmforms/.

52-14.03 Instructions For Completing Pavement Design Request Form

(1) For INDOT project, I, US, or SR and number. For LPA project, CR and number, or name of road.

(2) For INDOT project, County number is that in the alphabetical listing. For LPA project, name of county, city, or town making request.

(3) Description number.

(4) Net length of project in an urban or rural area.

(5) Descriptive location of project limits including reference markers. The discussion should include the proposed scope of the project as it is related to the pavement and its general classification, i.e., preventative maintenance, functional or structural overlay, reconstruction, widening, added travel lanes, etc. The discussion should indicate if milling or steep grades are included.

(6) Descriptive listing of the history of the pavement, year of construction, and subsequent overlays. If the project is a partial 3R or rehabilitation-type project, then core depth reports, FWD report, and color pictures are to be submitted.

(7) The type of the existing pavement, i.e., aggregate, asphalt, PCCP, or composite pavement, should be identified, with the width and thickness of the existing pavement.

(8) Identify the width, thickness, and condition of the existing shoulders or curbs.

(9) Does the existing pavement have underdrains?

(10) Identification of adjacent pavement types.

(11) The proposed posted speed limit for the project.

(12) Number of stop conditions, i.e., stop signs, traffic signals, intersections, etc.

(13) List the number and width of the travel lanes and turn lanes to be paved.

(14) Describe the type and width of shoulders or curbs planned.

(15) Provide the appropriate CBR or Resilient Modulus for HMA, *k* modulus of subgrade reaction value for PCCP, the type of subgrade treatment, and other geotechnical recommendations such as peat areas or other settlement areas.

(16) The year the project is to be constructed.

(17) Construction-year AADT.

(18) Future year the project is to be designed for.

(19) The design-year projected AADT.

(20) Percent trucks of the AADT that are Class 5 or higher.

(21) Identify the desired pavement type and the engineering reason for the selection.

(22) For an INDOT project, name of pavement designer or consultant.

(23) If Yes, attached completed document.

(24) Complete proposed pavement and shoulder description, including pay items, and amounts of each layer, for either QC/QA HMA, HMA, QC/QA PCCP, or PCCP Include as applicable, milling type and depth of milling, subgrade-treatment type, widening, subbase for PCCP, underdrains, etc.

(25) Signature of professional engineer submitting pavement design request.

(26) Seal of professional engineer submitting pavement design request.

FALLING-WEIGHT DEFLECTOMETER (FWD)
TESTING REQUEST

Date	Route	Project Location	R.P. (Stations)	Pavement Type	Engineer in Charge

Date: The date you want the FWD testing to be performed.

Project Location: State this information to the nearest 0.1 mi from one intersection, etc., to another. Include the county name.

R.P. (Stations): Reference Points in miles + decimals (Pre-existing stations in english units, so that FWD testing technicians or operators can find the correct beginning point).

Pavement Type: Include history such as asphalt over concrete, chip-and-seal over asphalt, etc.

Engineer in Charge: Name of engineer who will take charge of the FWD testing, with telephone number.

EXAMPLE:

Date	Route	Project Location	R.P. (Stations)	Pavement Type	Engineer in Charge
10-21-05	US 41	1.6 mi south of SR 48 to 0.3 mi north of SR 246, Sullivan and Vigo counties	76+456 to 83+534 (Sta. 1142+33 to 1571+41)	Asphalt over Concrete	John Q. Inspector, 765-555-1234

FALLING-WEIGHT DEFLECTOMETER (FWD)
TESTING REQUEST AND INSTRUCTIONS

Click When Done Clear Data

Pavement	Single Unit	Multiple Unit
HMA	0.600	1.300
PCCP	0.900	2.000

ESALs PER TRUCK

Figure 52-8A

Design Thickness, *d* (in.)	Plan Thickness (in.)
≤ 9¼	9
9¼ < *d* ≤ 9¾	9½
9¾ < *d* ≤ 10¼	10
10¼ < *d* ≤ 10¾	10½
10¾ < *d* ≤ 11¼	11
11¼ < *d* ≤ 11¾	11½
11¾ < *d* ≤ 12¼	12
12¼ < *d* ≤ 12¾	12½
12¾ < *d* ≤ 13¼	13
13¼ < *d* ≤ 13¾	13½
13¾ < *d* ≤ 14¼	14
14¼ < *d* ≤ 14¾	14½
14¾ < *d* ≤ 15¼	15
15¼ < *d* ≤ 15¾	15½
> 15¾	16

PCCP THICKNESS

Figure 52-8B

ESAL Category*	Mainline ESALs
1	< 300,000
2	< 3,000,000
3	< 10,000,000
4	< 30,000,000
5	≥ 30,000,000

* For Open Graded Mixtures (C19.0 and C25.0), the ESAL category is 5.

ESALs FOR QC/QA-HMA MIXTURES

Figure 52-9A

Mixture Type	Design ESALs, millions	Construction Year AADT
A	< 0.3	< 1000
B	0.3 ≤ ESAL < 3	1000 ≤ AADT < 15,000
C	3 ≤ ESAL < 10	15,000 ≤ AADT < 30,000
D	≥ 10	≥ 30,000

ESALs FOR HMA MIXTURES

Figure 52-9B

Treatment	Full-Depth Patching Area (SYS)
Preventative Maintenance	< 1%
CPR	1% ≤ Area ≤ 3%
Functional	1 ≤ Area ≤ 5%
Structural	> 5%

PCCP PATCHING LIMITS

Figure 52-9C

Outlet Protector Type	Outside		Median	
	Flattest	Steepest	Flattest	Steepest
1 (large)	10:1	2:1	10:1	4:1
2 (medium)	7:1	1:1	7:1	3:1
3 (small)	3:1	1:1	3:1	1:1

OUTLET PROTECTOR SLOPE LIMITS

Figure 52-10A

Type 4 Pipe Used As Underdrain Pipe, ft	Video Inspection Pay Quantity, ft
3,000 ≤ Type 4 Pipe < 30,000	3,000
30,000 ≤ Type 4 Pipe < 80,000	6,500
80,000 ≤ Type 4 Pipe < 150,000	10,000
150,000 ≤ Type 4 Pipe < 300 000	13,000
≥ 300 000	16,000

VIDEO INSPECTION CONTRACT QUANTITIES

Figure 52-10B

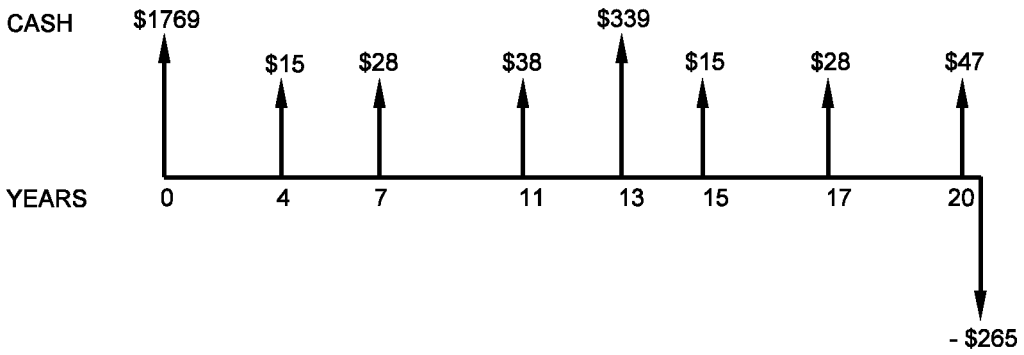

ACTIVITY TIME EXAMPLE WITH CASH FLOW

Figure 52-12A

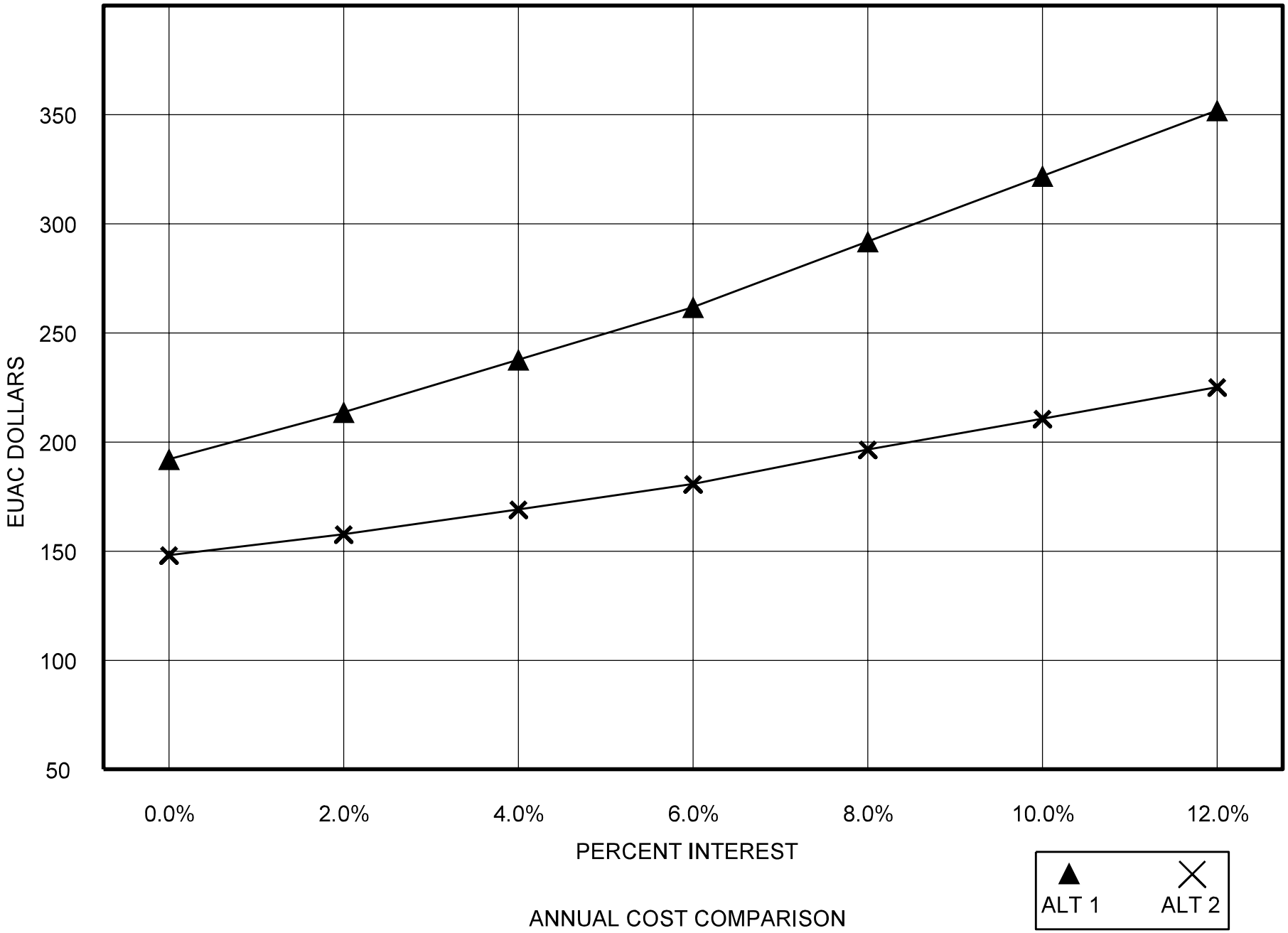

ANNUAL COST COMPARISON
LIFE -CYCLE RESURFACE ALT 1 & 2

Figure 52-12B

Pavement or Work Type	Design Life, Years
New PCCP	30
Concrete Pavement over Existing Pavement	25
New Full Depth HMA	20
HMA Overlay over Rubblized PCCP	20
HMA Overlay over Asphalt Pavement	15
HMA Overlay over Cracked and Seated PCCP	15
HMA Overlay over CRC Pavement	15
HMA Overlay over Jointed Concrete, Sawed and Sealed Joints	15
HMA Overlay over Jointed Concrete	12
PCCP Joint Sealing	8
Mill and Overlay of Existing Asphalt	8
Concrete Pavement Rehabilitation (CPR) Techniques	7
Microsurface Overlay	6
Chip Seal	4
Asphalt Crack Sealing	3

LCCA PAVEMENT DESIGN LIVES

Figure 52-12C

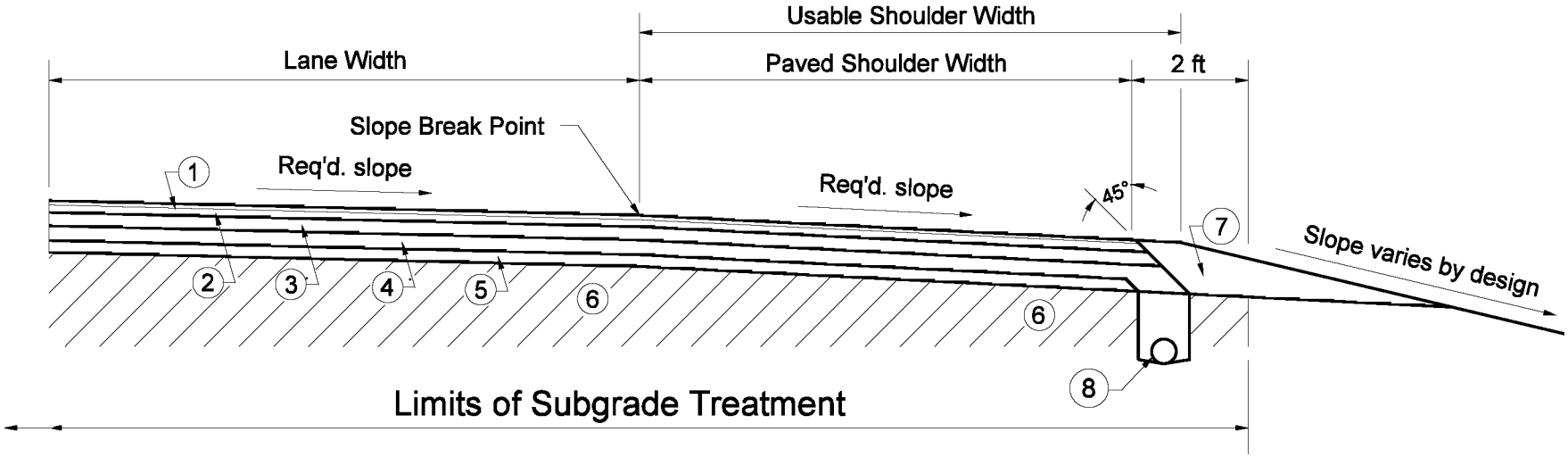

* All Pavement, Including All Shoulders

1. 165 lb/yd² HMA Surface 9.5 mm
2. 275 lb/yd² HMA Intermediate 19.0 mm
3. 440 lb/yd² Minimum HMA Base 25.0 mm
4. ** 440 lb/yd² QC/QA-HMA Intermediate OG25.0 mm
5. 440 lb/yd² HMA Base 25.0 mm
6. Subgrade Treatment
7. Variable-Depth Compacted Aggregate, No. 53
8. Pipe, Type 4, Circular, 6 in.

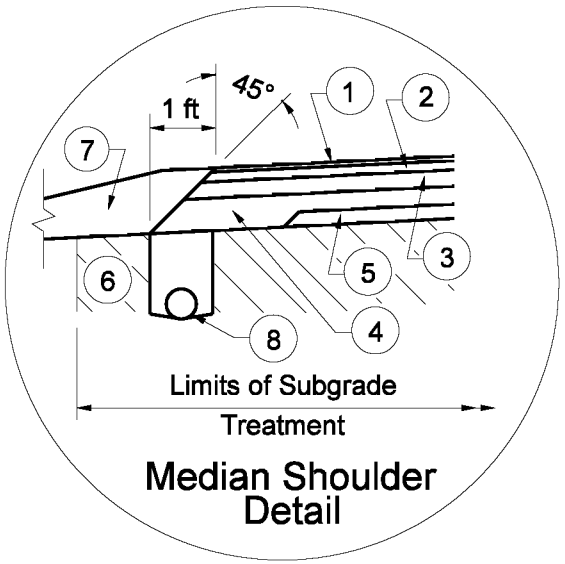

Median Shoulder Detail

* Open graded mixtures OG19.0 mm or OG25.0 mm should be QC/QA-HMA, 5, 76. For all other mixtures, see Section 52-9.02 to determine the appropriate HMA mixture designation.

** If underdrain warrants are not met, Intermediate OG25.0 mm mix should be replaced with HMA Base 25.0 mm, minimum 495 lb/yd².

FULL DEPTH HMA PAVEMENT,

≥ 30 MILLION ESALs

Figure 52-13A

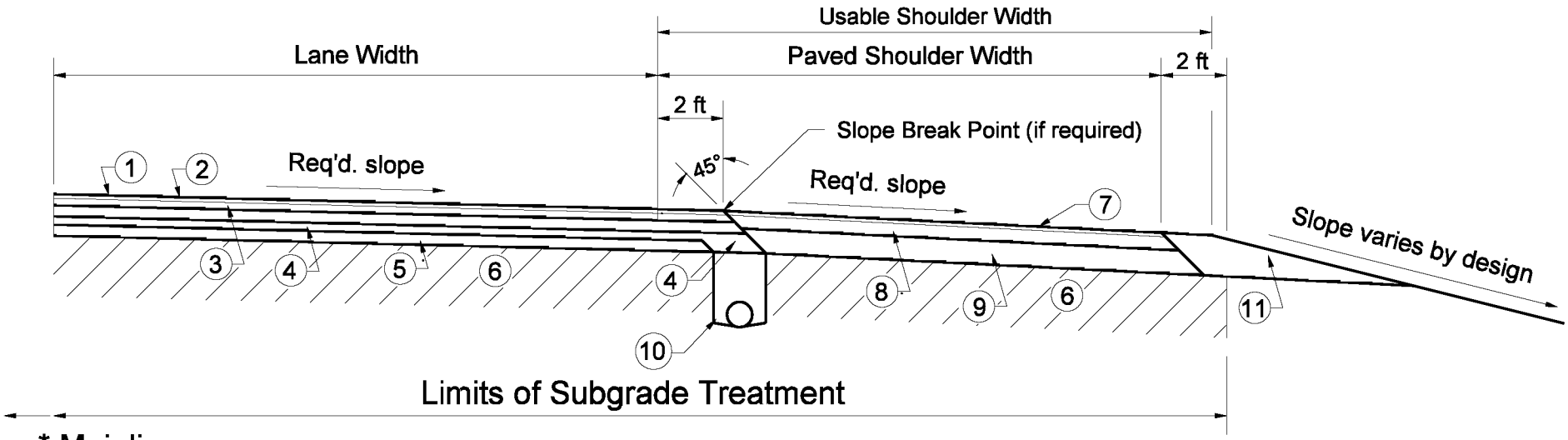

* Mainline

1. 165 lb/yd² HMA Surface 9.5 mm
2. 275 lb/yd² HMA Intermediate 19.0 mm
3. 440 lb/yd² HMA Base 25.0 mm
4. ** 300 lb/yd² QC/QA-HMA Intermediate OG25.0 mm
5. 440 lb/yd² HMA Base 25.0 mm
6. Subgrade Treatment
10. Pipe, Type 4, Circular, 6 in.

* Shoulders

7. 165 lb/yd² HMA Surface 9.5 mm
8. 495 lb/yd² HMA Base 25.0 mm
9. Compacted Aggregate, No. 53, Base
   (Depth equals mainline HMA thickness minus 6 in.)
11. Variable-Depth Compacted Aggregate, No. 53

* Open graded mixtures OG19.0 mm or OG25.0 mm should be QC/QA-HMA, 5, 76. For all other mixtures, see Section 52-9.02 to determine the appropriate HMA mixture designation.

** Where underdrains are not required, QC/QA-HMA Intermediate OG25.0 mm mix should be replaced with HMA Base 25.0 mm, 330 lb/yd².

FULL DEPTH HMA PAVEMENT,

10 MILLION ≤ ESALs < 30 MILLION

Figure 52-13B

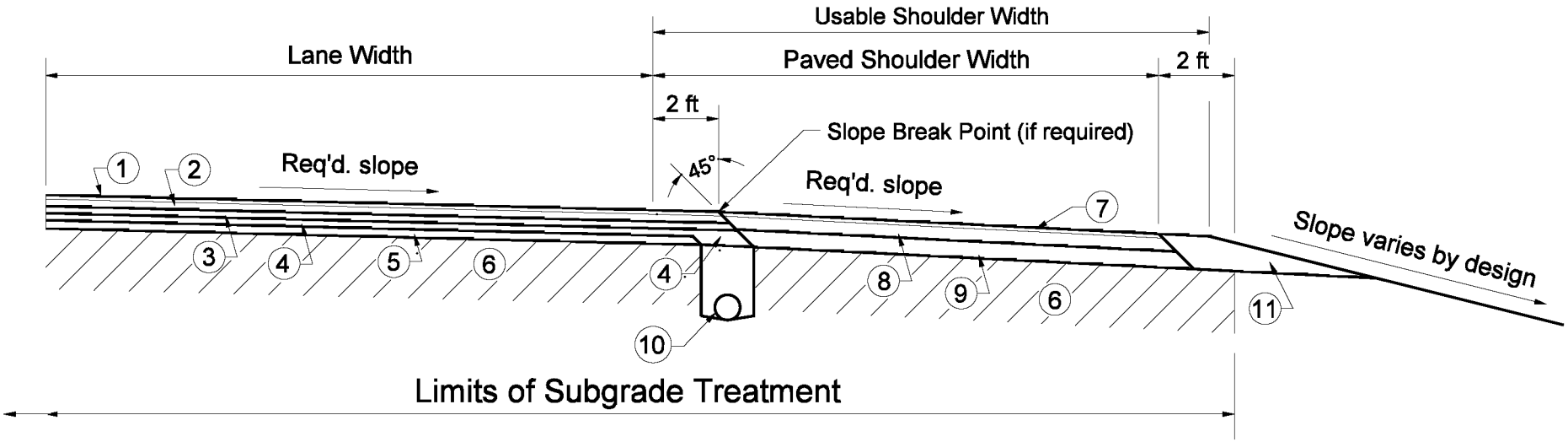

* Mainline Pavement (Section With Shoulders)

1. 165 lb/yd² HMA Surface 9.5 mm
2. 275 lb/yd² HMA Intermediate 19.0 mm
3. 275 lb/yd² HMA Base 19.0 mm
4. ** 275 lb/yd² Minimum QC/QA-HMA Intermediate OG19.0 mm
5. 330 lb/yd² QC/QA-HMA Base 19.0 mm
6. Subgrade Treatment
10. Pipe, Type 4, Circular, 6.0 in.

* Shoulders

7. 165 lb/yd² HMA Surface 9.5 mm
8. 495 lb/yd² HMA Base 25.0 mm
9. Compacted Aggregate, No.53, Base
   (Depth equals mainline HMA thickness minus 6 in.)
11. Variable-Depth Compacted Aggregate, No. 53

* Open graded mixtures OG19.0 mm or OG25 mm should be QC/QA-HMA, 5, 76. For all other mixtures, see Section 52-9.02 to determine the appropriate HMA mixture designation.

** Where underdrains are not required, QC/QA-HMA Intermediate OG19.0 mm mix should be replaced with HMA Base 19.0 mm minimum 275 lb/yd².

FULL DEPTH HMA PAVEMENT,

1 MILLION ≤ ESALs <10 MILLION

Figure 52-13C

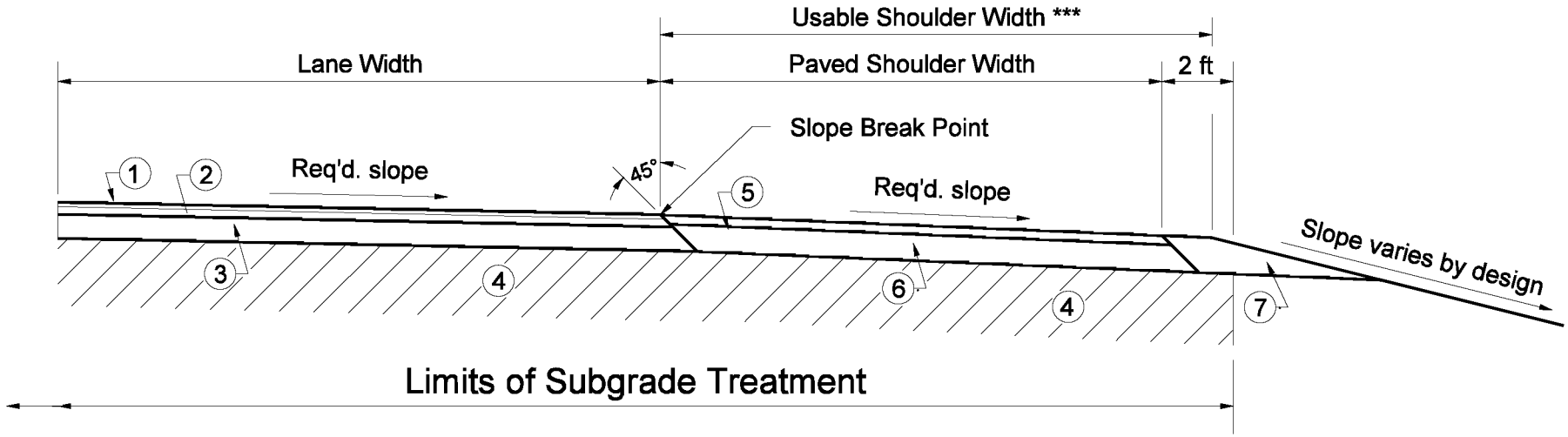

* Mainline (Section With Shoulders)

1. 165 lb/yd² HMA Surface 9.5 mm
2. 275 lb/yd² HMA Intermediate 19.0 mm
3. ** 880 lb/yd² HMA Base 25.0 mm
4. Subgrade Treatment

* Shoulders

5. 330 lb/yd² HMA Surface 9.5 mm
6. 9 in. Compacted Aggregate, No. 53, Base
   Or (5) & (6) may be replaced by
   12 in. Minimum Compacted Aggregate , No. 53, Base
7. Variable-Depth Compacted Aggregate, No. 53

* Where underdrains are not required, see Figure 52-13C.

** See Section 52-9.02 to determine the appropriate HMA mixture designation.

*** Earth may be substituted for compacted aggregate dependent on geometric requirements for the usable shoulder width outside the paved area.

FULL DEPTH HMA PAVEMENT, < 1 MILLION ESALs

Figure 52-13D

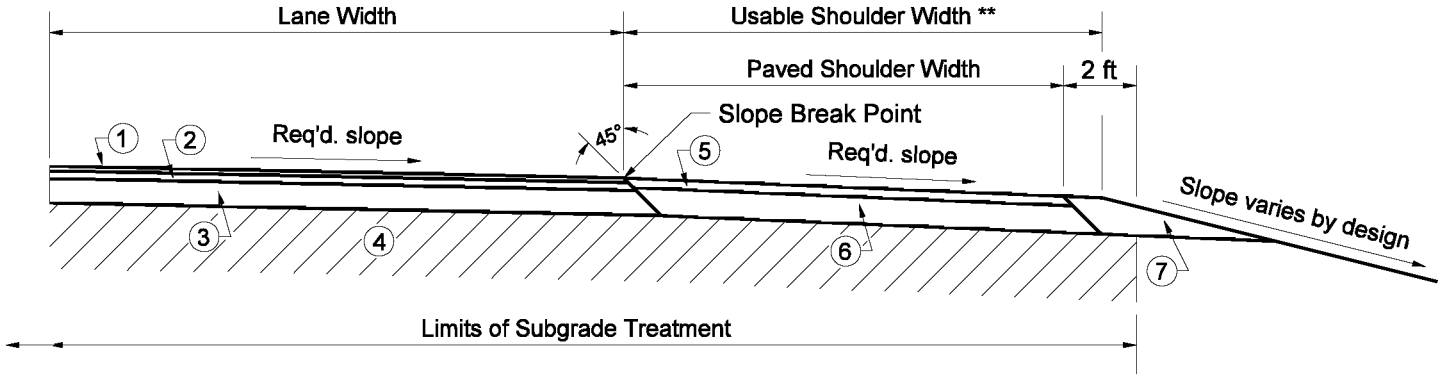

* Mainline (Section With Shoulders)

1. 165 lb/yd² HMA Surface 9.5 mm
2. 275-605 lb/yd² HMA Intermediate 19.0 mm
3. 5 to 8 in. Compacted Aggregate Base

   (1) + (2) + (3) ≥ 12 in.
4. Subgrade Treatment

** Shoulders

5. 330 lb/yd² HMA Surface 9.5 mm
6. 9 in. Compacted Aggregate Base

   Or (5) & (6) may be replaced by

   12 in. Minimum Compacted Aggregate Base
7. Variable-Depth Compacted Aggregate, No. 53

* See Section 52-9.02 to determine the appropriate HMA mixture designation.

** Earth may be substituted for compacted aggregate dependent on geometric requirements for the usable shoulder width outside the paved area.

COMPOSITE HMA / COMPACTED AGGREGATE PAVEMENT

< 1 MILLION ESALs

Figure 52-13E

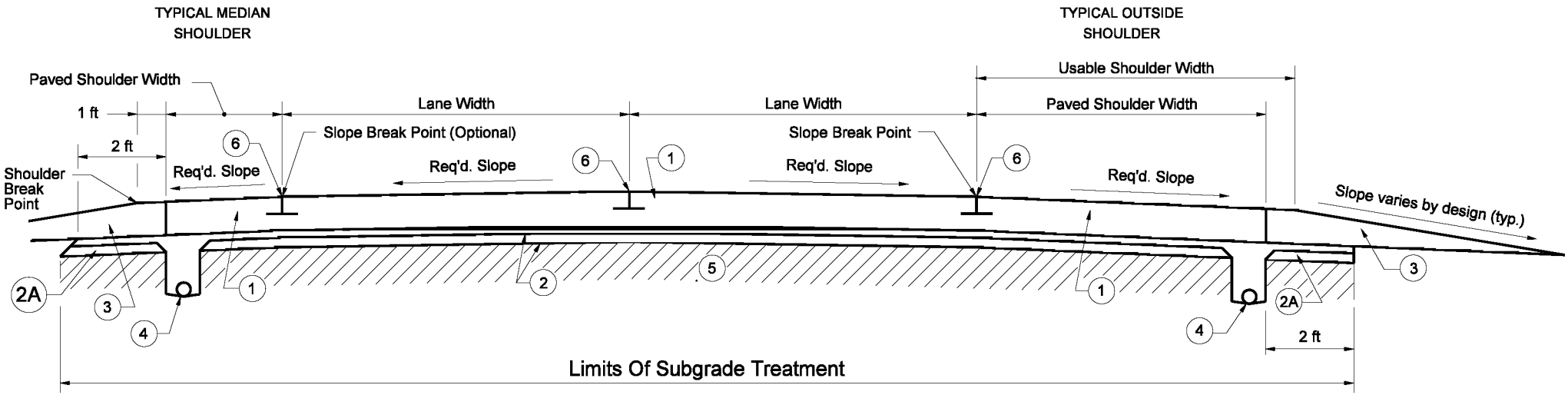

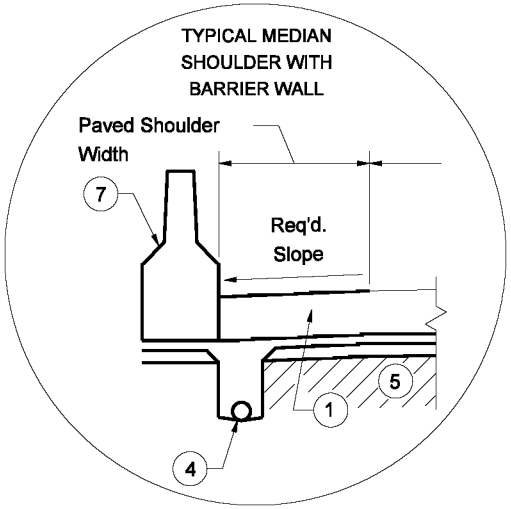

Mainline and Shoulders

1 PCCP

* 2 Subbase for PCCP (3 in. Coarse Aggregate No.8 On 6 in. Coarse Aggregate No.53, Base)

2A 6 in. Compacted Aggregate, No. 53, Base

3 Variable-Depth Compacted Aggregate, No. 53

4 Pipe, Type 4, Circular, 6 in.

5 Subgrade Treatment

6 Longitudinal Joint or Longitudinal Construction Joint. See Figure 52-13R for Pavement Joint Options.

7 Concrete Median Barrier

* Where underdrains are not required, Dense Graded Subbase should be used.

PCCP SECTION WITH PCC SHOULDER, ≥ 30 MILLION ESALs

Figure 52-13F

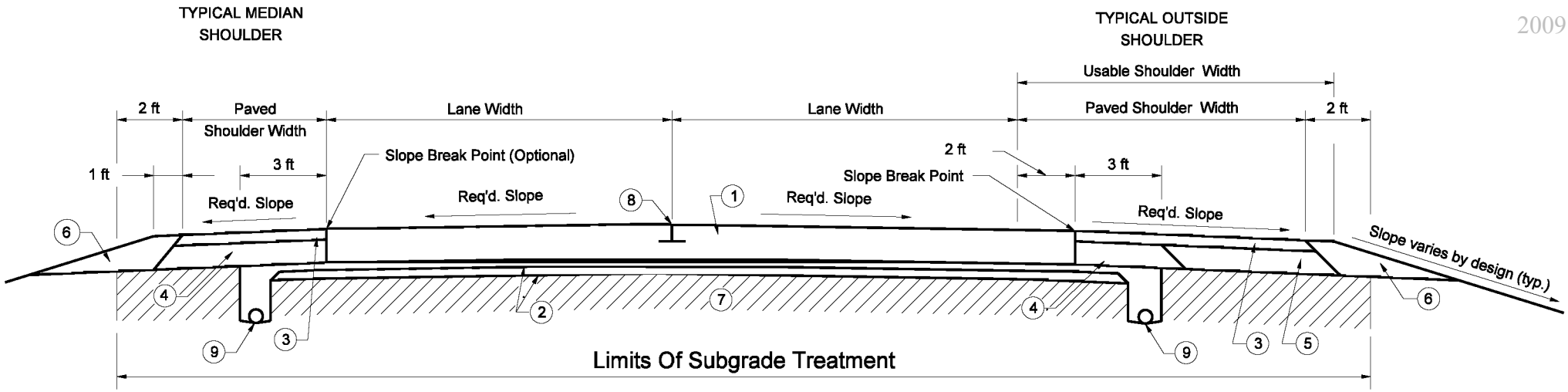

Mainline

1. PCCP
2. * Subbase for PCCP (3 in. Coarse Aggregate No.8 On 6 in. Coarse Aggregate No.53, Base)

Shoulders

3. ** 165 lb/yd² HMA Surface 9.5 mm
   330 lb/yd² HMA Intermediate 19.0 mm
4. ** HMA Base 25.0 mm
5. Compacted Aggregate, No. 53, Base
6. Variable-Depth Compacted Aggregate, No. 53
7. Subgrade Treatment
8. Longitudinal Joint or Longitudinal Construction Joint
9. Pipe, Type 4, Circular, 6 in.

* Where underdrains are not required, Dense Graded Subbase should be used.

** See Section 52-9.02 to determine the appropriate HMA mixture designation.

PCCP SECTION WITH HMA SHOULDER, < 30 MILLION ESALs

Figure 52-13G

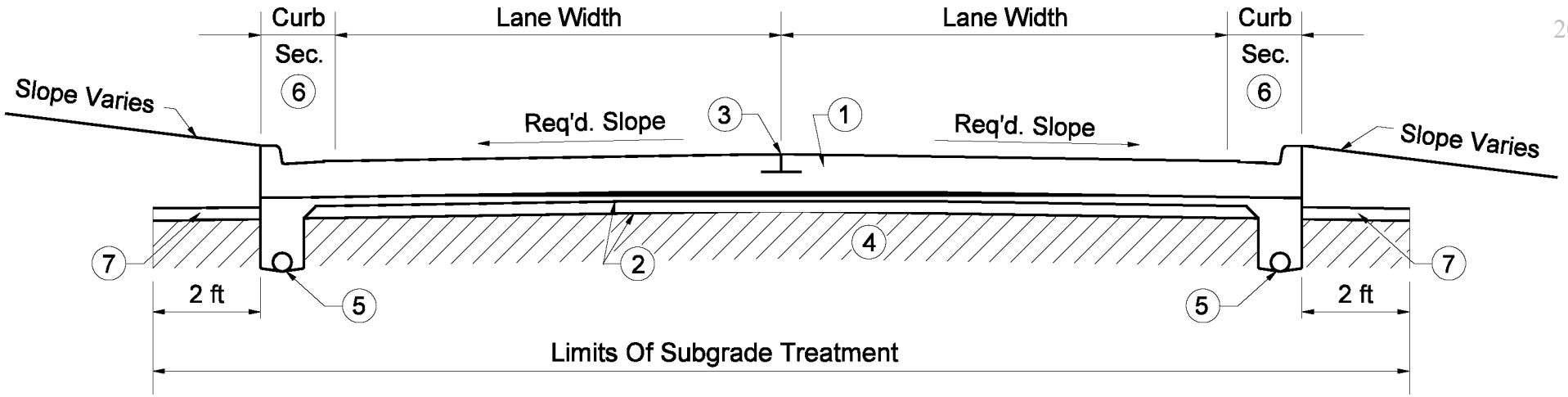

Mainline

1. PCCP
2. * Subbase for PCCP (3 in. Coarse Aggregate #8 On 6 in. Coarse Aggregate #53, Base)
3. Longitudinal Joint or Longitudinal Construction Joint
4. Subgrade Treatment
5. Pipe, Type 4, Circular, 6 in.
6. See Figure 52-13Q for Geotextile Installation Requirements for Curbs (Required Only With Underdrains)

* Where underdrains are not required, Dense Graded Subbase should be used.

7. 6" Compacted Aggregate, No. 53, Base

PCCP WITH CONCRETE CURB

Figure 52-13H

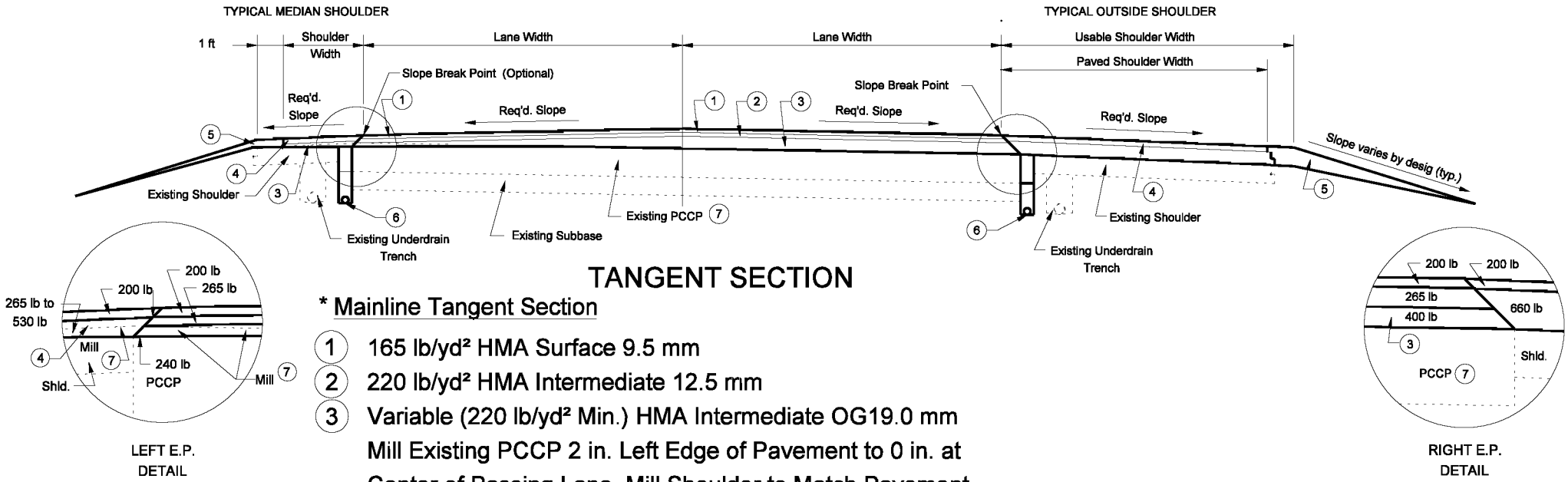

TANGENT SECTION

* Mainline Tangent Section

1. 165 lb/yd² HMA Surface 9.5 mm
2. 220 lb/yd² HMA Intermediate 12.5 mm
3. Variable (220 lb/yd² Min.) HMA Intermediate OG19.0 mm
   Mill Existing PCCP 2 in. Left Edge of Pavement to 0 in. at Center of Passing Lane, Mill Shoulder to Match Pavement

* Shoulder Tangent Section

4. 165 lb/yd² HMA Surface 9.5 mm on Variable HMA Intermediate 19.0 mm
5. Compacted Aggregate, No. 53
6. Pipe, Type 4, Circular, 4 in.

* Open graded mixture OG19.0 mm should be QC/QA-HMA, 5, 76. For all other mixtures, see Section 52-9.02 to determine the appropriate HMA mixture designation.

* Mainline Superelevated Section

1. 165 lb/yd² HMA Surface 9.5 mm
2. 220 lb/yd² HMA Intermediate 12.5 mm
3. Variable (220 lb/yd² Min.) HMA Intermediate OG19.0 mm to attain proper superelevation
7. Do not mill Existing PCCP if superelevated

OVERLAY (TILT TO CROWN SECTION)
Figure 52-13 I

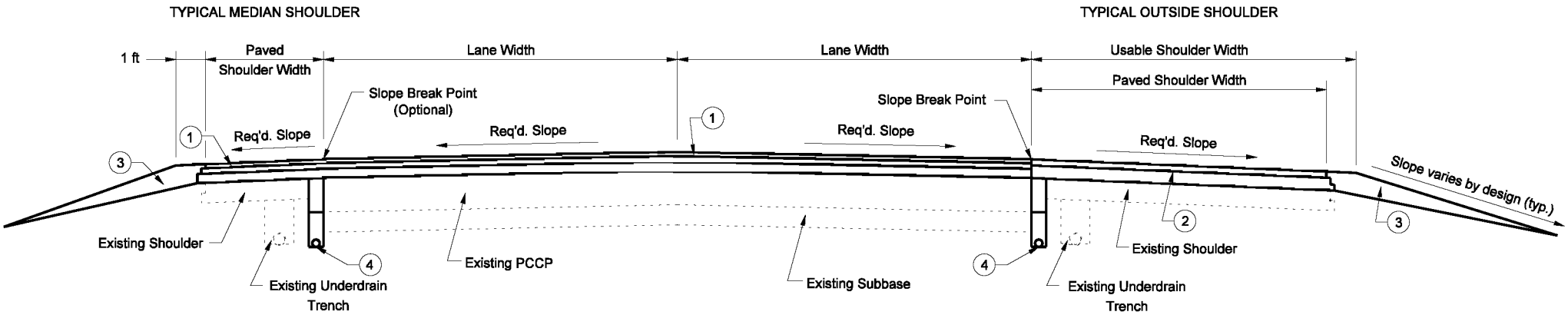

* Mainline

(1) 165 lb/yd² HMA Surface 9.5 mm
220 lb/yd² HMA Intermediate 12.5 mm
Variable depth QC/QA-HMA, 5, 76, Intermediate OG19.0 mm (220 lb/yd² at Pavement Edge, 275 lb/yd² at ℄)

* Shoulder

(2) 165 lb/yd² HMA Surface 9.5 mm on
440 lb/ yd² HMA Base 25.0 mm
(3) Compacted Aggregate, No. 53
(4) Pipe, Type 4, Circular, 4 in. See Figure 52-13K for Retrofit Underdrain Detail.

* Open graded mixture OG19.0 mm should be QC/QA-HMA, 5, 76. For all other mixtures, see Section 52-9.02 to determine the appropriate HMA mixture designation.

OVERLAY (CROWN TO CROWN SECTION)

FIGURE 52-13J

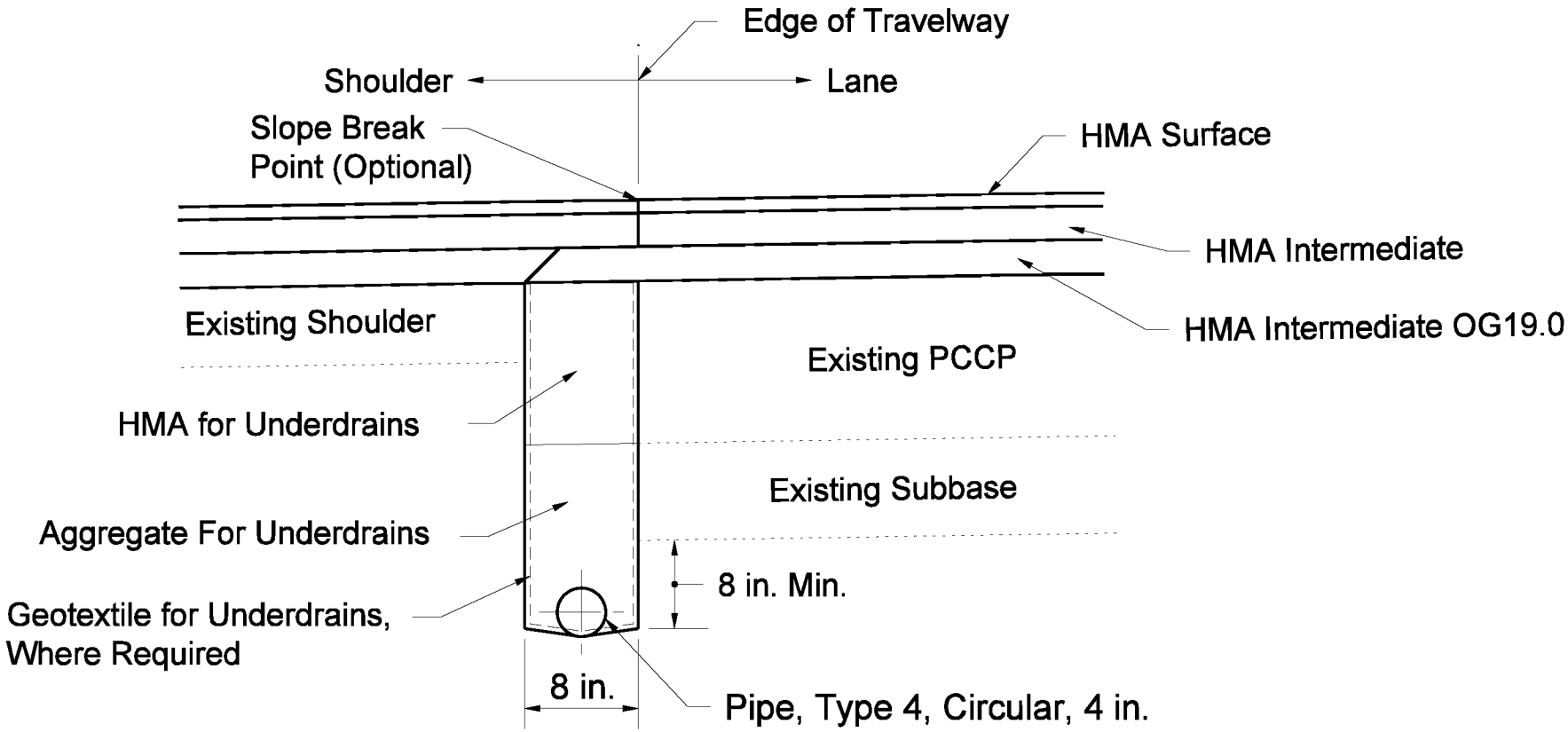

Notes:

1. Open graded mixture OG19.0 mm should be QC/QA-HMA, 5, 76. For all other mixtures, see Section 52-9.02 to determine the appropriate HMA mixture designation.
2. Median installation shown. Outside installation reversed as appropriate. However, slope break point is required.

RETROFIT UNDERDRAIN

Figure 52-13K

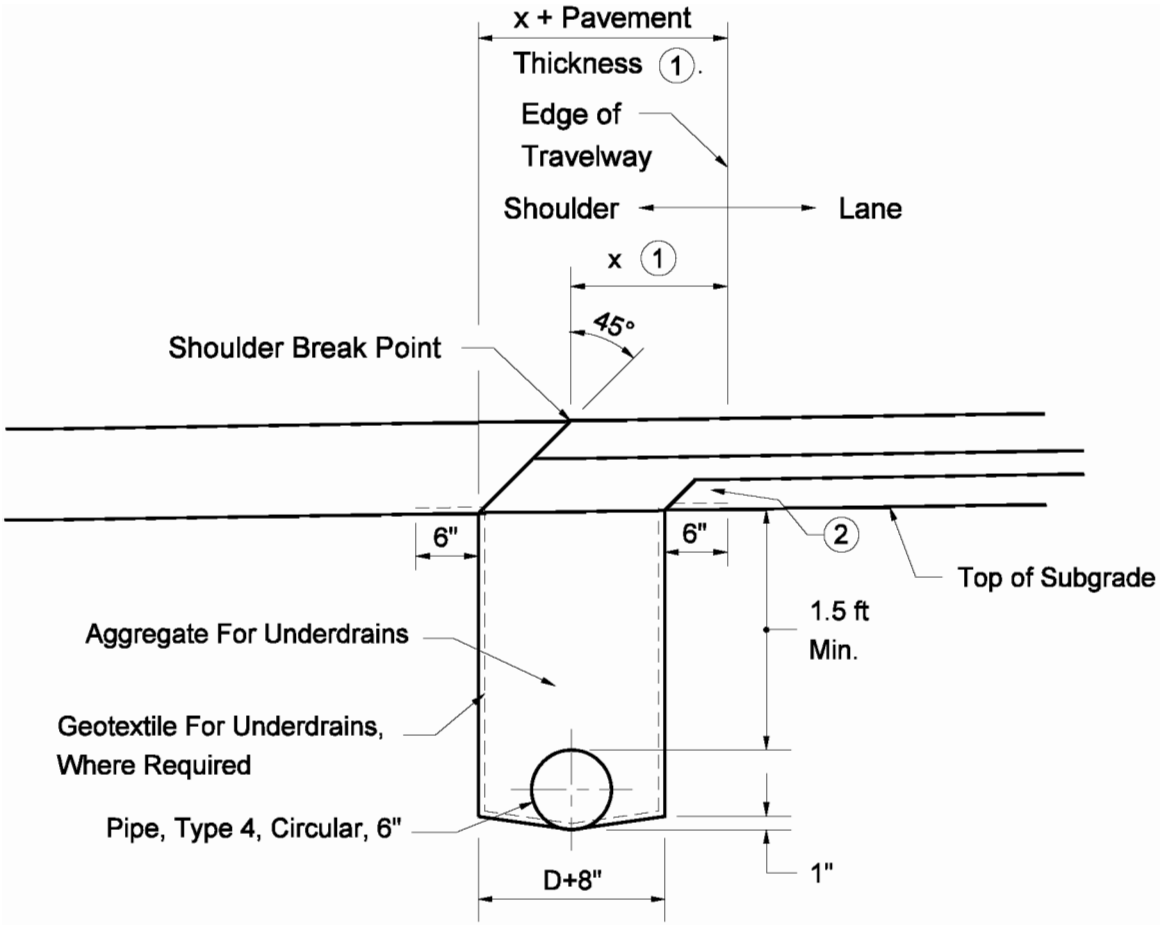

(1) Dimension x is 2 ft min., 4 ft max. See Fig. 45-1A(1).

(2) Where a HMA Base 25.0 mm course is used, the geotextile fabric shall extend under the course.

3. Median Installation shown. Outside Installation Reversed as Applicable.

UNDERDRAIN FOR HMA PAVEMENT
≥ 30 MILLION ESALs

Figure 52-13L

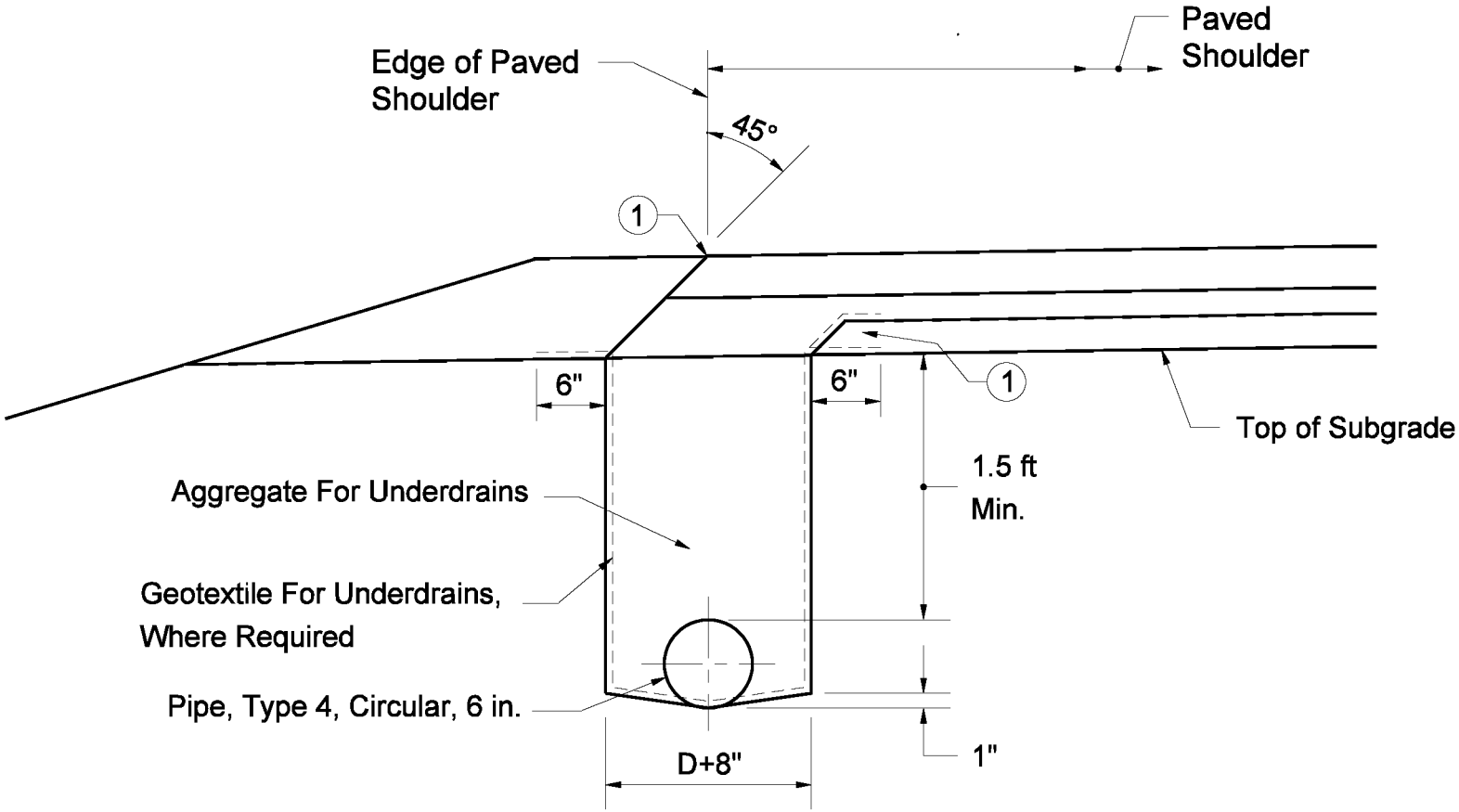

(1) Where a HMA Base 25.0 mm course is used, the geotextile fabric shall extend under the course.

2. Median Installation shown. Outside Installation Reversed as Applicable.

UNDERDRAIN FOR HMA PAVEMENT
≥ 30 MILLION ESALs

Figure 52-13M

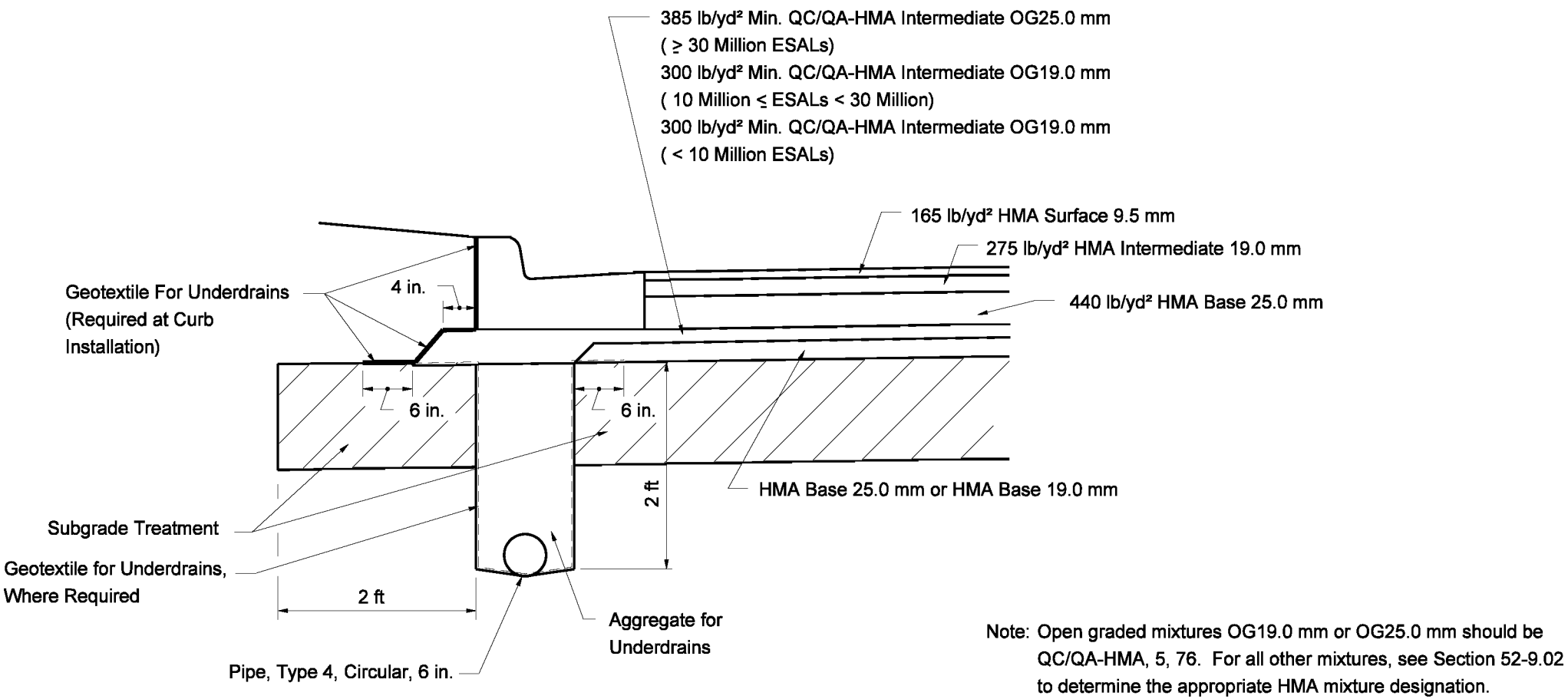

Note: Open graded mixtures OG19.0 mm or OG25.0 mm should be QC/QA-HMA, 5, 76. For all other mixtures, see Section 52-9.02 to determine the appropriate HMA mixture designation.

CONCRETE CURB AND GUTTER SECTION FOR HMA PAVEMENT
WITH UNDERDRAIN

Figure 52-13N

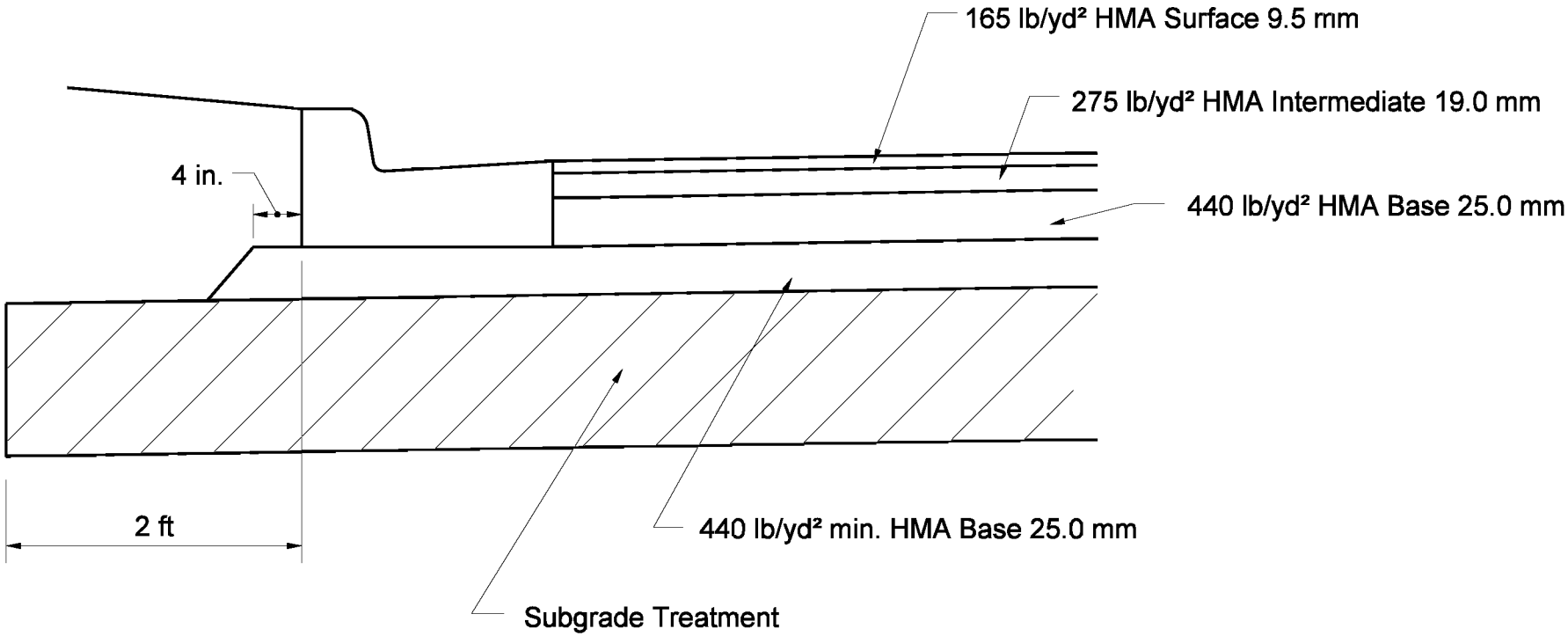

Note: See Section 52-9.02 to determine the appropriate HMA mixture designation.

CONCRETE CURB AND GUTTER SECTION FOR HMA PAVEMENT WITHOUT UNDERDRAIN

Figure 52-13 O

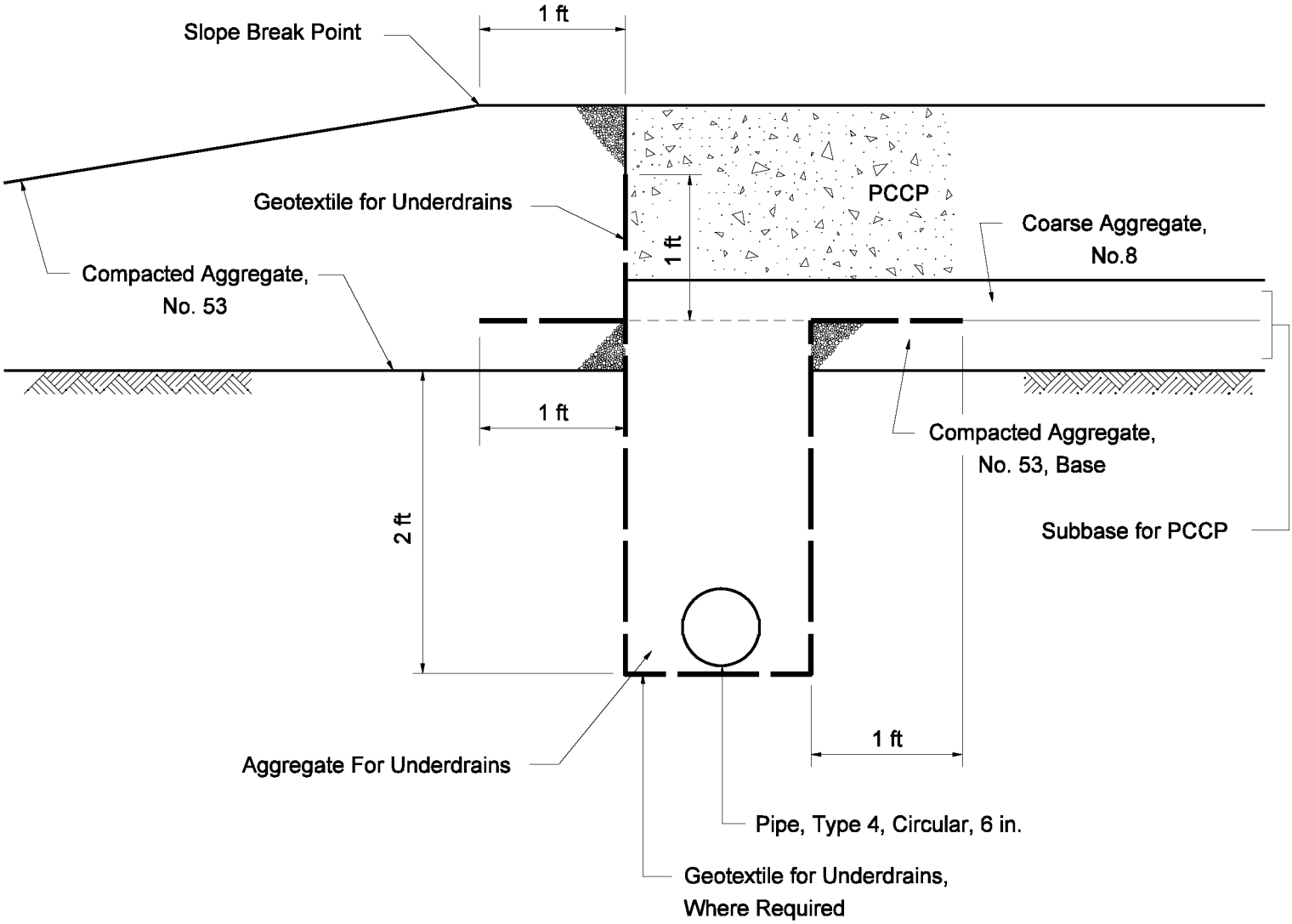

PCCP WITH UNDERDRAIN

Figure 52-13P

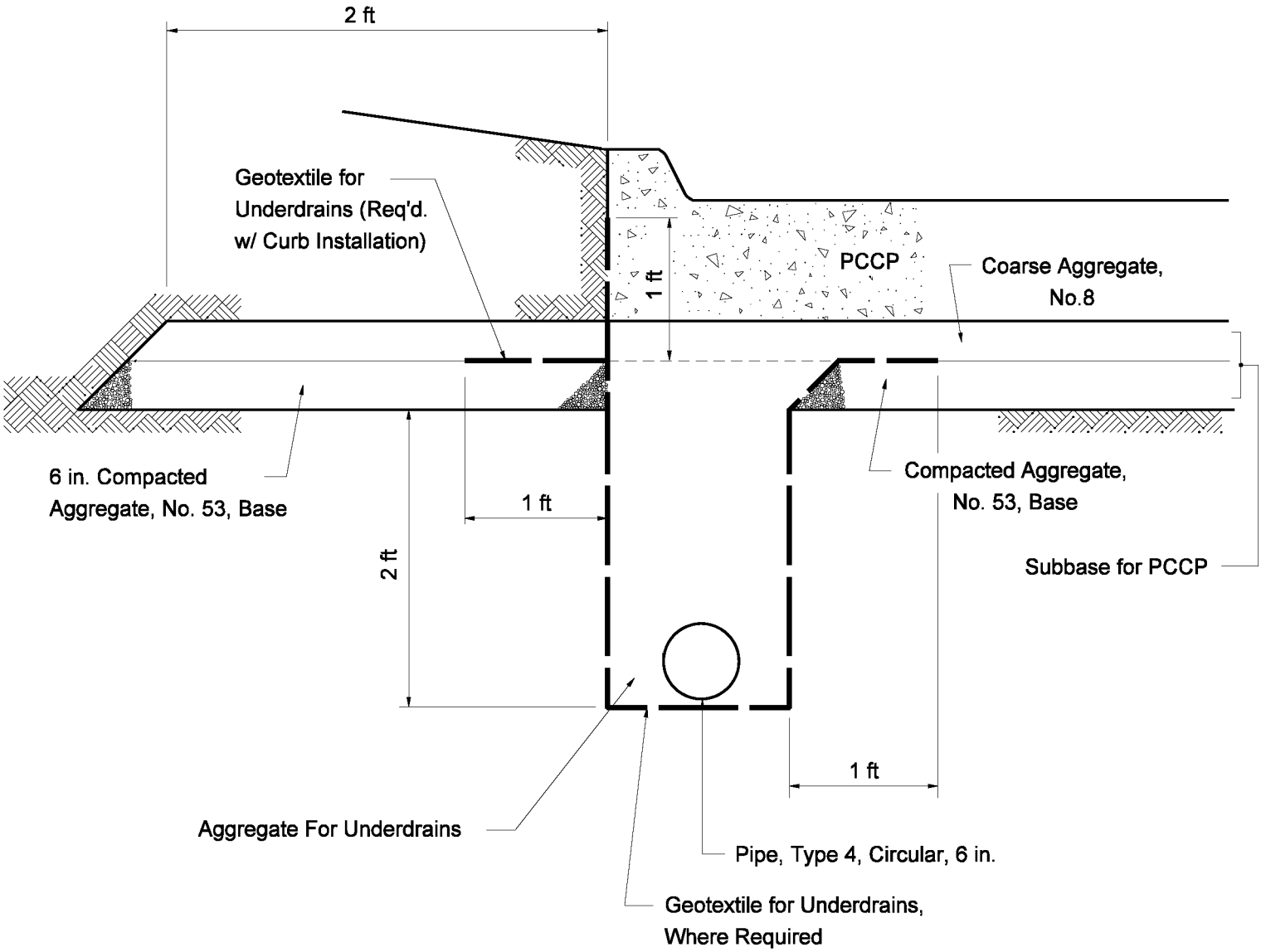

CURBED PCCP
WITH UNDERDRAIN

Figure 52-13Q

Note: Option to be determined by the contractor.

OPTIONS A AND B:

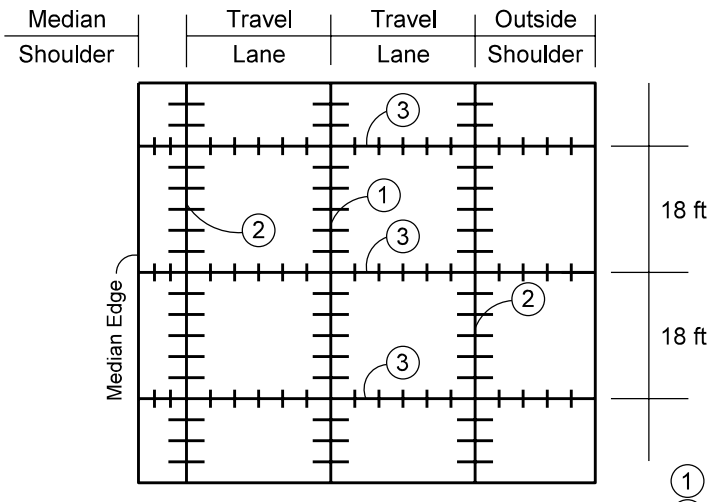

OPTION C:

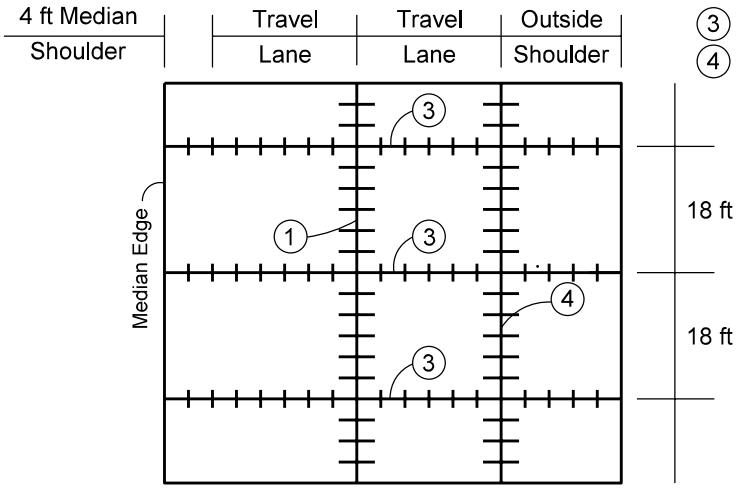

1 Longitudinal Joint
2 Option A: Longitudinal Joint
Option B: Longitudinal Constr. Joint
3 Type D-1 Contraction Joint
4 Longitudinal Joint or
Longitudinal Constr. Joint

MEDIAN EDGE OF CONCRETE PAVEMENT
LONGITUDINAL JOINT OPTIONS

Figure 52-13R

* Open graded mixtures OG19.0 mmor OG25.0 mm should be QC/QA-HMA, 5, 76. For all other mixtures, see Section 52-9.02 to determine the appropriate HMA mixture designation.

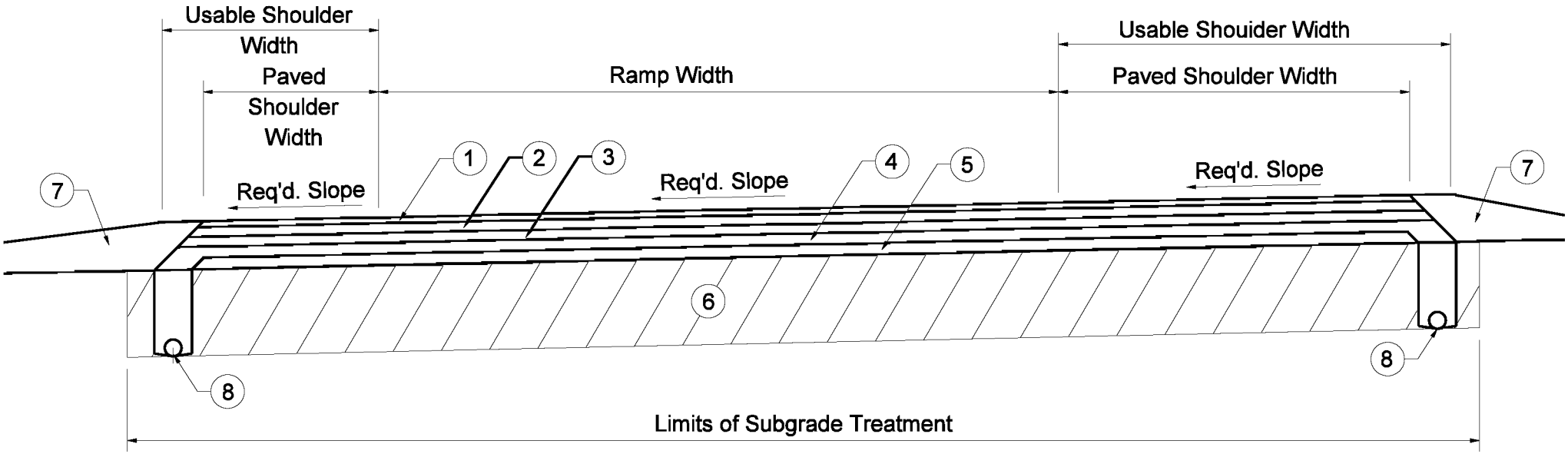

* Ramp

1. 165 lb/yd² HMA Surface 9.5 mm
2. 275 lb/yd² HMA Intermediate 19.0 mm
3. 330 lb/yd² Minimum HMA Base 19.0 mm or HMA Intermediate 19.0 mm
4. 250 lb/yd² QC/QA-HMA Inteermediate OG19.0 mm
5. 330 lb/yd² QC/QA HMA Base 19.0 mm or HMA Intermediate 19.0 mm
6. Subgrade Treatment
7. Variable-Depth Compacted Aggregate, No. 53
8. Pipe, Type 4, Circular, 6 in.

FULL-DEPTH HMA RAMP

Figure 52-13S

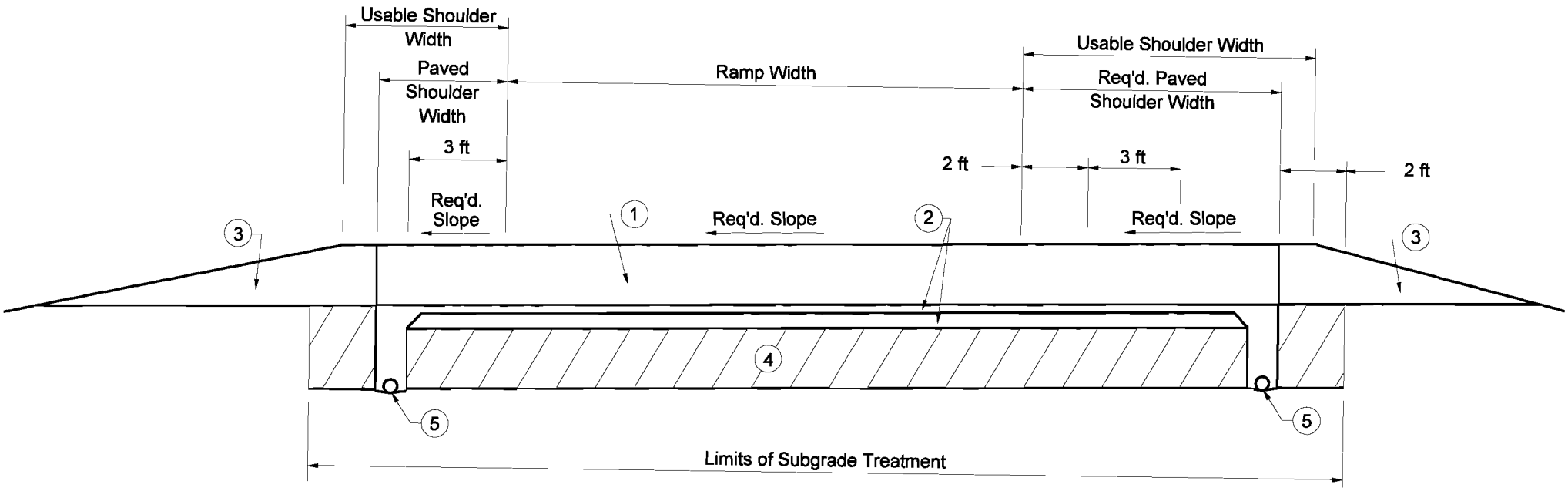

Ramp

1. PCCP
2. Subbase for PCCP (3 in. Coarse Aggregate, No. 8 on 6 in. Coarse Aggregate, No. 53, Base)
3. Variable Depth Compacted Aggregate, No. 53
4. Subgrade Treatment
5. Pipe, Type 4, Circular, 6 in.

PCCP RAMP

Figure 52-13T

Note:

Open graded mixture OG19.0 mm should be QC/QA-HMA, 5, 76. For all other mixtures, see Section 52-9.02 to determine the appropriate HMA mixture designation.

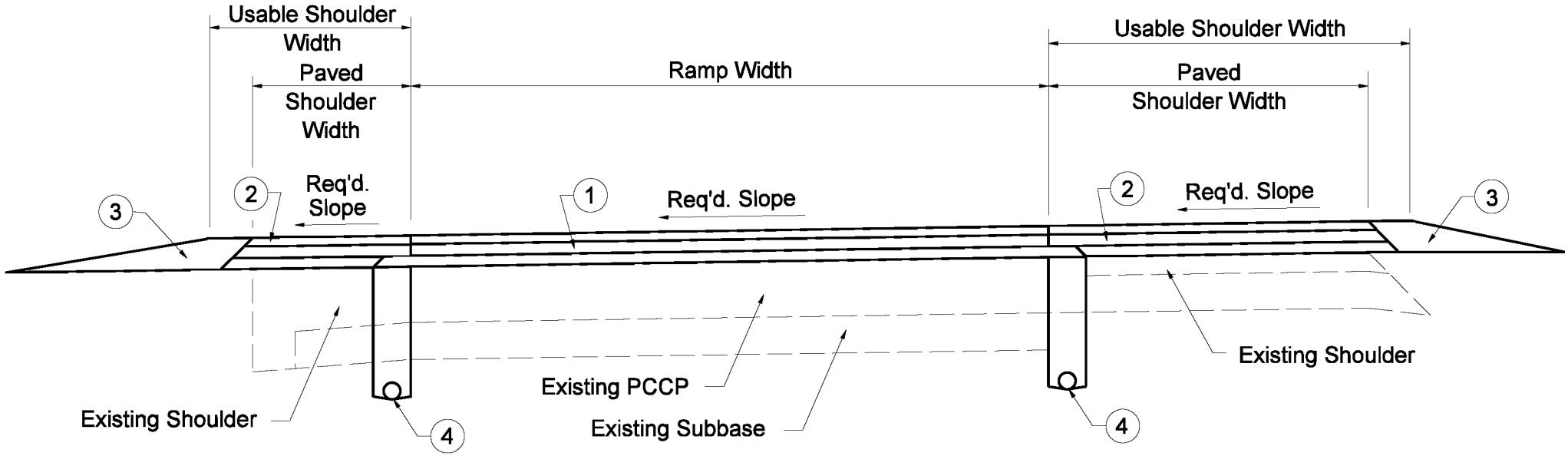

Ramp

(1) 165 lb/yd HMA Surface 9.5 mm on
220 lb/yd² HMA Intermediate 12.5 mm on
220 lb/yd² QC/QA-HMA, 5, 76, Intermediate OG19.0 mmin.

Shoulder

(2) 165 lb/yd² HMA Surface 9.5 mm on
440 lb/yd² HMA Base 25.0 mm

(3) Variable-Depth Compacted Aggregate, No. 53

(4) Pipe, Type 4, Circular, 4 in.(See Figure 52-13K for Retrofit Underdrain Detail)

RAMP WITH OVERLAY

Figure 52-13U

Notes:

1. Open graded mixtures OG19.0 mm or OG25.0 mm should be QC/QA-HMA, 5, 76. For all other mixtures, see Section 52-9.02 to determine the appropriate HMA mixture designation.

(2) Concrete Curb and Gutter desirable. Type B curb may be used where drainage is away from it.

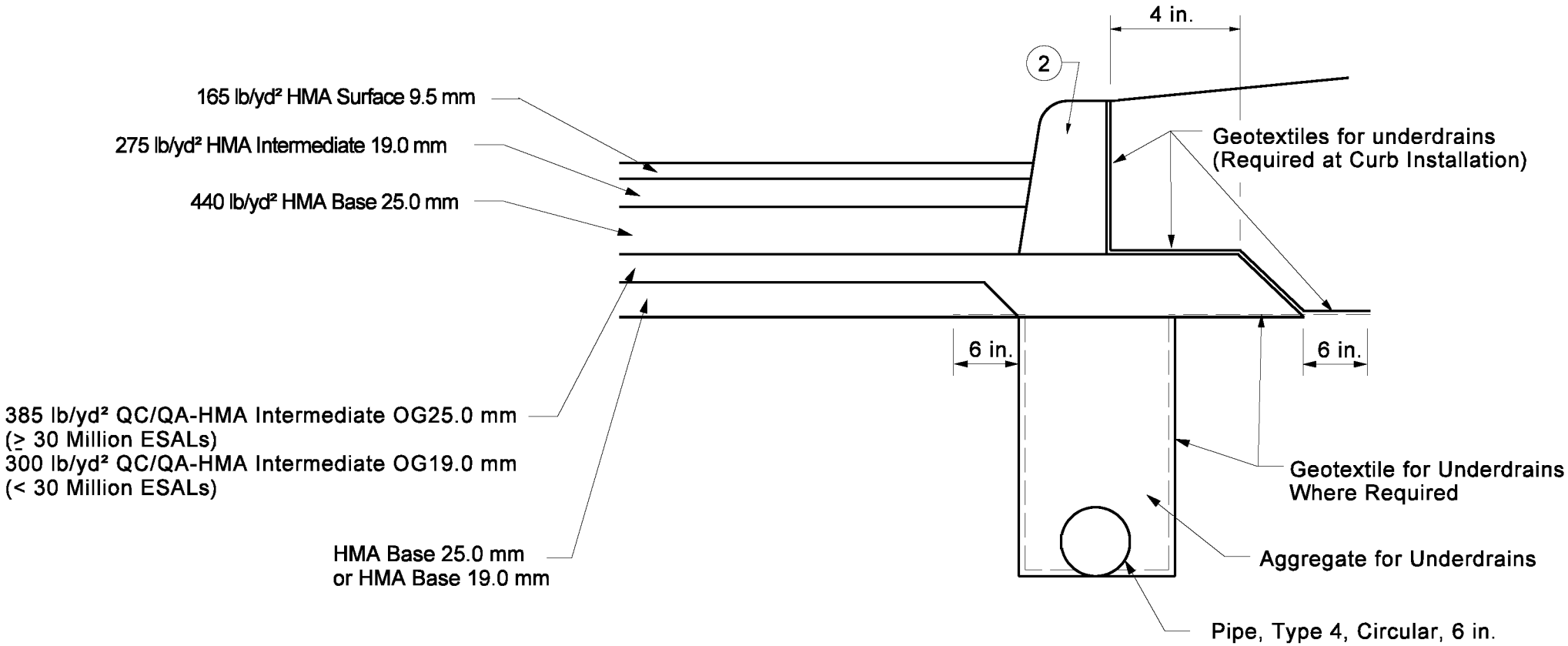

HMA PAVEMENT WITH CONCRETE CURB
AND UNDERDRAIN

Figure 52-13V

Notes:

See Section 52-9.02 to determine the appropriate HMA mixture designation.

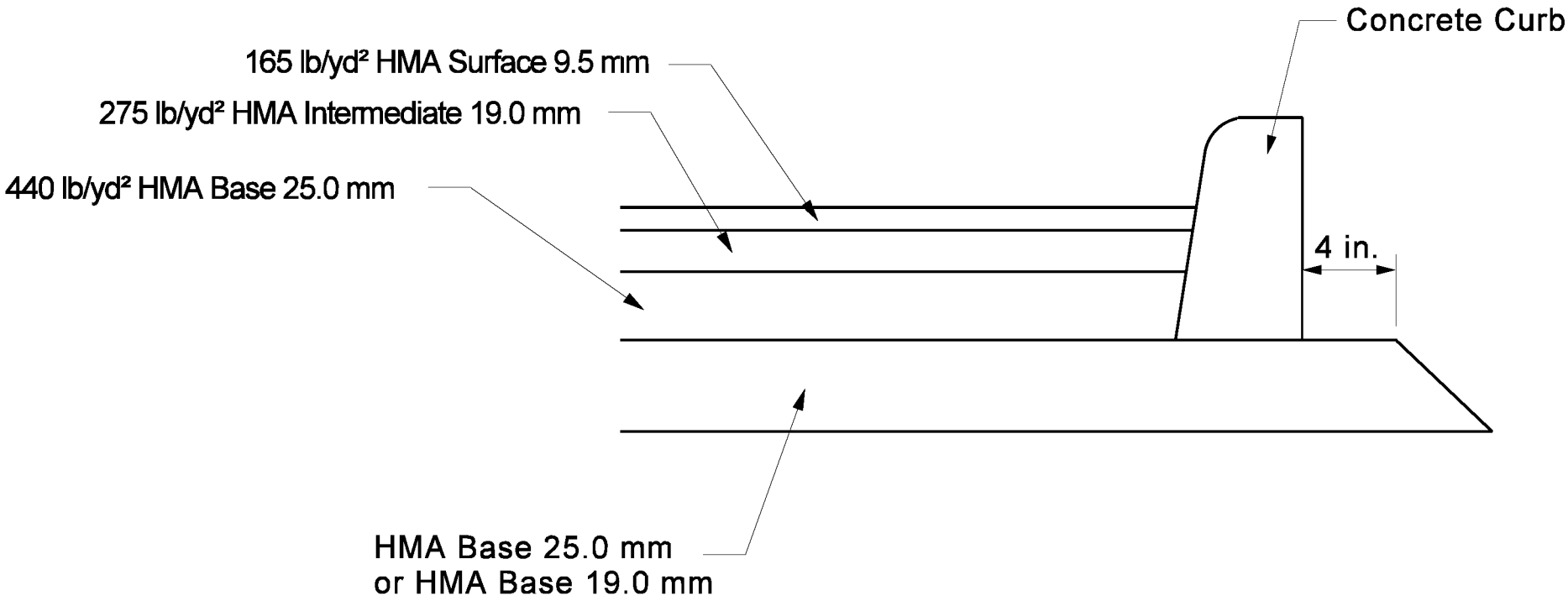

HMA PAVEMENT WITH CONCRETE CURB
AND NO UNDERDRAIN

Figure 52-13W

Light-Duty HMA / Aggregate Composite Section
(Equivalent to Class II Drive Section):

165 lb/yd^2 HMA Surface Type A on
275 lb/yd^2 Intermediate Type A on
8 in. Min. Compacted Aggregate Base, No. 53

Medium-Duty HMA / Aggregate Composite Section
(Equivalent to Class IV Drive Section):

165 lb/yd^2 HMA Surface Type B on
495 lb/yd^2 Intermediate Type B on
6 in. Min. Compacted Aggregate Base, No. 53

Heavy-Duty HMA / Aggregate Composite Section
(Equivalent to Class VI Drive Section):

165 lb/yd^2 HMA Surface Type B on
605 lb/yd^2 Intermediate Type B on
10 in. Min. Compacted Aggregate Base, No. 53

PCCP Section:

6 in. Min. PCCP for Approaches on
6 in. Dense Grade Subbase

PARKING LOT PAVEMENT SECTIONS

Figure 52-13X

PAVEMENT DESIGN REQUEST – INDOT PROJECT

Route: (1) _____ County Name and Number: (2) _____
Des No.: (3) _____ Project Length: (4) Rural _____ Urban _____
Pavement Scope: (5) _____
_____
_____
_____
_____
_____
Pavement History: (6) _____
_____
Existing Pavement: (7) Type _____, Width _____, Thickness _____
Existing Shoulder or Curb Condition: (8) _____
Existing Underdrains: (9) Yes ☐ No ☐
Adjacent Pavement Types: (10) Before _____, After _____
Posted Speed Limit: (11) ____ mph; Number of Stop Conditions: (12) _____
Lanes Number and Width: (13) Travel Lanes, ____ @ _____, Turn Lanes, ____ @ _____
Proposed Shoulder Width or Curb Type: (14) _____

Date Geotechnical Report Approved: _____
Special Geotechnical Considerations: (15) CBR _____, Resilient Modulus_____,
"k" value (modulus of subgrade reaction) _____,
Type of Subgrade Treatment _____,
Other: _____
_____

Design Data:
Construction Year: (16) 20___ , AADT: (17) _____
Design Year: (18) 20___; AADT: (19) _____
AADT Percent Trucks: (20) _____

Desired Pavement Type: PCCP ☐ HMA ☐
Reason: (21) _____
_____

Submitted By: (22) _____ Date: _____

Click When Done Clear Data

PAVEMENT DESIGN REQUEST – LPA PROJECT

Route Name or Number: (1) _____ Local Public Agency: (2) _____
Des No.: (3) _____ Project Length: (4) Rural _____ Urban _____
Pavement Scope: (5) _____
_____
_____
_____
_____
_____
Pavement History: (6) _____
_____
Existing Pavement: (7) Type _____, Width _____, Thickness _____
Existing Shoulder or Curb Condition: (8) _____
Existing Underdrains: (9) Yes ☐ No ☐
Adjacent Pavement Types: (10) Before _____, After _____
Posted Speed Limit: (11) ____ mph; Number of Stop Conditions: (12) _____
Lanes Number and Width: (13) Travel Lanes, ____ @ _____, Turn Lanes, ____ @ _____
Proposed Shoulder Width or Curb Type: (14) _____

Date Geotechnical Report Approved: _____
Special Geotechnical Considerations: (15) CBR _____, Resilient Modulus_____,
"k" value (modulus of subgrade reaction) _____,
Type of Subgrade Treatment _____,
Other: _____
_____

Design Data:
Construction Year: (16) 20___ , AADT: (17) _____
Design Year: (18) 20___; AADT: (19) _____
AADT Percent Trucks: (20) _____

Desired Pavement Type: PCCP ☐ HMA ☐
Reason: (21) _____
_____

LCCA Completed: (23) Yes ☐ No ☐

PAVEMENT DESIGN REQUEST – LPA PROJECT (Cont'd.)

Proposed Pavement Section: (24) _____

_____

_____

_____

_____

_____

Recommended By: (25) _____ Date: _____

Registration Seal (26)

Approved: _____ Date: _____

INDOT Pavement Design Engineer

Click When Done

Clear Data