TABLE OF CONTENTS

TABLE OF CONTENTS....1

List of Figures....3
78-2A Minimum Volumes for Complete Interchange Lighting....3
78-2B Editable Highway Lighting Accident Warrant Analysis Worksheet....3
78-2C Appendices For Highway Lighting Accident Warrant Analysis Worksheet....3
78-3A Typical Luminaire....3
78-3B Mast Arm Rise Versus Length....3
78-5A Lamp Data....3
78-6A INDOT Lighting Design Parameters....3
78-6B INDOT Illuminance Design Criteria....3
78-6C Luminaire Geometry....3
78-6D Luminaire Classification System....3
78-6E Guide for Luminaire Lateral Light Type and Placement....3
78-6F Plan View for Luminaire Coverages....3
78-6G Sample Coefficient-of-Utilization Curve....3
78-6H Roadway Luminaire Dirt Depreciation Factors....3
78-6 I Lighting System Configurations....3
78-6J Partial Interchange Lighting....3
78-6K Breakaway Support Stub Clearance Diagram....3
78-6L Light Standard Treatment (Fill Slopes 4:1 or Steeper)....3
78-6M Pole Clearances for Ramp Gores....3
78-6N Design Amperes for Various Luminaires....3
78-6O Copper Wire Resistance....3
78-6P Voltage Drop Calculations (Example 78-6.1)....3
78-8A Urban Collector Highway (Example 78-8.1)....3
78-8B Coefficient-of-Utilization Curve (M-S-II Luminaire)....3
78-8C Sample Isolux Diagram (Example 78-8.1)....3
78-8D Unadjusted Illumination Values (Example 78-8.1)....3
78-8E Urban Interchange Lighting....3
78-8F Sample Isolux Diagram (Example 78-8.2)....3
78-8G Interchange Lighting Layout (Example 78-8.2)....3
78-8H Unadjusted Illumination Values (Example 78-8.2)....3

CHAPTER SEVENTY-EIGHT....4

78-1.0 GENERAL....4
78-1.01 References....4
78-1.02 Definitions of Terms....5
78-1.03 State and Local Responsibilities....6
78-1.04 Lighting Studies....9

78-2.0 WARRANTS....9
78-2.01 Freeway....9
78-2.02 Interchange....10
78-2.03 Warrants for Street or Highway Other Than a Freeway....11
78-2.04 Highway-Sign Lighting....11
78-2.05 Rest Area....12
78-2.06 Truck Weigh Station....12

78-2.07 Bridge Structure 12
78-2.08 Tunnel 12
78-2.09 Other Location 12
78-2.10 Reduction or Removal of Lighting 13

78-3.0 LIGHTING EQUIPMENT 14
78-3.01 Foundation 14
78-3.02 Light Standard, or Pole 15
78-3.03 Mast Arm 16
78-3.04 Luminaire 17
78-3.04(01) Light Source 17
78-3.04(02) Optical System 18
78-3.04(03) Ballast 19
78-3.04(04) Housing Unit 19
78-3.05 Other Equipment 20

78-4.0 LIGHTING METHODOLOGIES 20
78-4.01 Illuminance 20
78-4.02 Luminance 21
78-4.03 Small-Target Visibility (STV) 21

78-5.0 DESIGN PROCEDURE 22
78-5.01 Computerized Design 22
78-5.02 Design Process 22

78-6.0 DESIGN CONSIDERATIONS 24
78-6.01 Roadway Classification 25
78-6.02 Design Criteria 26
78-6.03 Equipment Considerations 26
78-6.03(01) Light Distribution 27
78-6.03(02) Mounting Height 28
78-6.03(03) Coefficient of Utilization 29
78-6.03(04) Light-Loss Factor (Maintenance Factor) 29
78-6.04 System Configuration 30
78-6.05 Roadside-Safety Considerations 30
78-6.06 Other Considerations 33
78-6.07 Voltage Drop Determination 33

78-7.0 HIGH-MAST LIGHTING DESIGN 35

78-8.0 EXAMPLE COMPUTATIONS 36

List of Figures

Figure **Title**

78-2A Minimum Volumes for Complete Interchange Lighting
78-2B Editable Highway Lighting Accident Warrant Analysis Worksheet
78-2C Appendices For Highway Lighting Accident Warrant Analysis Worksheet
78-3A Typical Luminaire
78-3B Mast Arm Rise Versus Length
78-5A Lamp Data
78-6A INDOT Lighting Design Parameters
78-6B INDOT Illuminance Design Criteria
78-6C Luminaire Geometry
78-6D Luminaire Classification System
78-6E Guide for Luminaire Lateral Light Type and Placement
78-6F Plan View for Luminaire Coverages
78-6G Sample Coefficient-of-Utilization Curve
78-6H Roadway Luminaire Dirt Depreciation Factors
78-6 I Lighting System Configurations
78-6J Partial Interchange Lighting
78-6K Breakaway Support Stub Clearance Diagram
78-6L Light Standard Treatment (Fill Slopes 4:1 or Steeper)
78-6M Pole Clearances for Ramp Gores
78-6N Design Amperes for Various Luminaires
78-6O Copper Wire Resistance
78-6P Voltage Drop Calculations (Example 78-6.1)
78-8A Urban Collector Highway (Example 78-8.1)
78-8B Coefficient-of-Utilization Curve (M-S-II Luminaire)
78-8C Sample Isolux Diagram (Example 78-8.1)
78-8D Unadjusted Illumination Values (Example 78-8.1)
78-8E Urban Interchange Lighting
78-8F Sample Isolux Diagram (Example 78-8.2)
78-8G Interchange Lighting Layout (Example 78-8.2)
78-8H Unadjusted Illumination Values (Example 78-8.2)

CHAPTER SEVENTY-EIGHT

HIGHWAY LIGHTING

78-1.0 GENERAL

The purpose of highway lighting is to provide a safe and comfortable environment for the night-time driver. Due to the voluminous nature of highway-lighting-system design, it is impractical for this Chapter to provide a complete highway-lighting-design guide. For additional design information, the designer is encouraged to review the latest edition of the references listed in Section 78-1.01. The intent of this Chapter is to provide the user with a synopsis of the highway-lighting-design process and to provide INDOT's criteria, policies, and procedures regarding these issues.

78-1.01 References

For additional information on highway lighting, the designer should review the publications as follows;

1. *An Informational Guide for Roadway Lighting*, AASHTO;

2. *Roadway Lighting Handbook*, FHWA;

3. *Roadway Lighting Handbook*, Addendum "Designing the Lighting System - Using Pavement Luminance," FHWA;

4. *Roadway Lighting*, RP-8, Illuminating Engineering Society (not used on an INDOT project);

5. NCHRP Report No. 152, *Warrants for Highway Lighting*, TRB (not used on an INDOT project);

6. NCHRP Report No. 256, *Partial Lighting of Interchanges*, TRB (not used on an INDOT project);

7. Chapter Forty-nine, "Roadside Safety," *Indiana Design Manual*, INDOT;

8. *Standard Specifications for Structural Supports for Highway Signs, Luminaires and Traffic Signals*, AASHTO;

9. INDOT *Standard Drawings*, INDOT;

10. INDOT *Standard Specifications*, INDOT;

11. National Electrical Code; and

12. National Electric Safety Code.

78-1.02 Definitions of Terms

The following defines the more commonly used terms in highway lighting.

1. Average Maintained Illuminance. The average level of horizontal illuminance on the roadway pavement once the output of the lamp and luminaire is diminished by the maintenance factors; expressed in average lux for the pavement area.

2. Candela (cd). The unit of luminous intensity.

3. Candela per Square Meter (cd/m^2). The unit of photometric brightness (luminance). The unit is equal to the uniform luminance of a perfectly diffusing surface emitting or reflecting light at the rate of 1 lm/m^2 or the average luminance of a surface emitting or reflecting light at that rate.

4. Effective Mounting Height. The vertical distance between the foundation of the light standard and the center of the light source in the luminaire.

5. Glare. The optical sensation produced by luminance within the visual field that is sufficiently greater than the luminance to which the eyes are adapted and which causes annoyance, discomfort, or loss in visual performance and visibility.

6. Illuminance. The density of the luminous flux incident on a surface. It is the quotient of the luminous flux divided by the area of the surface where the latter is uniformly illuminated.

7. Lamp Lumens Depreciation Factor (LLD). A depreciation factor that indicates the decrease in a lamp's initial lumen output over time. For design calculations, the initial lamp lumen value is reduced by an LLD to compensate for the anticipated lumens reduction.

8. Longitudinal Roadway Line. A line along the roadway parallel to the curb or shoulder line.

9. Lumen (lm). A unit of measure of the quantity of light.

10. Luminaire. A complete lighting unit consisting of a lamp or lamps together with the parts designed to distribute the light, to position and protect the lamps, and to connect the lamps to the power supply.

11. Luminaire Dirt Depreciation Factor (LDD). A depreciation factor that indicates the expected reduction of a lamp's initial lumen output due to the accumulation of dirt on or within the luminaire over time.

12. Luminance. The luminous intensity of a surface in a given direction per unit of projected area of the surface as viewed from that direction.

13. Lux (lx). The illuminance on a surface of 1 m^2 in area on which there is uniformly distributed a light flux of 1 lm, or the illuminance produced on a surface for which all points are at a distance of 1 m from a uniform point source of 1 cd.

14. Maintenance Factor (MF). A combination of light-loss factors used to denote the reduction of the illumination for a given area after a period of time compared to the initial illumination on the same area (MF = LLD x LDD).

15. Mounting Height. The vertical distance between the roadway surface and the center of the light source in the luminaire.

16. Nadir. The vertical axis which passes through the center of the luminaire light source.

17. Spacing. The distance in meters between successive lighting units.

18. Transverse Roadway Line. A line across the roadway that is perpendicular to the curb or shoulder line.

19. Uniformity Ratio. The ratio of average maintained lux of illuminance on the pavement to the maintained lux at the point of minimum illuminance on the pavement. A uniformity ratio of 3:1 means that the average lux value on the pavement is three times the lux value at the point of least illuminance on the pavement.

78-1.03 State and Local Responsibilities

The following describes the responsibilities between the Department and a local government agency for a lighting installation along a State-maintained highway.

1. INDOT Jurisdiction. The Department may illuminate any portion of a State, U.S., or Interstate highway outside incorporated city or town limits that meet the warranting conditions provided in Section 78-2.0. INDOT will not provide illumination inside city or town incorporated limits, except along an Interstate route.

2. Local Jurisdiction. A local governmental agency may install lighting along a State highway within its jurisdictional limits provided the agency finds sufficient benefit in the form of convenience, safety, policing, community promotion, public relations, etc. The local agency will develop appropriate warranting guidelines for installing lighting. If the city or town has not developed warrants, the Department warrants in Section 78-2.0 or those listed in the references in Section 78-1.01 should be considered. The local agency will be responsible for installing, maintaining, and operating the lighting facilities. The plans for lighting a State highway within local jurisdictional limits must meet Department criteria and must receive INDOT approval through a formal agreement prior to installation. The plans should be submitted for review to the Highway Operations Division's Office of Traffic Engineering.

3. Installation. Installation by the Department will be done under the Department's normal programming and contracting procedures. The installation, however, may be performed through an agreement with a utility company.

4. Operation. For each location where the Department is responsible for paying the energy costs, an agreement must be negotiated between the local utility company and the Department for payment of the electrical current. The current may or may not be metered. All bills should be submitted through the district Office of Traffic for payment.

5. Maintenance. Maintenance of a Department lighting system may be furnished by agreement with a local utility company, by an independent lighting contractor, or by trained INDOT personnel.

6. Agreement. An agreement for a Department lighting system should be prepared according to INDOT agreement policy. According to Indiana Code (IC, 8-23-22-2, and amendments thereto), the Department is required to enter into an agreement for sharing the utility costs.

7. Existing System. Where an agreement between INDOT and a local agency on maintenance and operation of an existing lighting system along a State-maintained highway cannot be resolved, the following will apply.

    a. If a system installed by the Department is annexed into the city or town corporate limits and the local agency does not agree to take over the maintenance and

operation costs, the system should be considered for removal if a cost analysis shows such action to be cost effective. A removal study as defined in Section 78-2.10 should be conducted.

b. If the system was installed by the local agency and the local agency is no longer willing to pay for the operation and maintenance costs, INDOT will determine if the system is warranted. If it is warranted and is outside the incorporation limits, the Department may take over the responsibilities for maintaining and operating the system. If the system is not warranted, the local agency may be requested to remove the system. If the local agency will not remove the system, the Department may remove it as described in Section 78-2.10.

c. If the system was installed in accordance with an agreement entered into between the Department and the local governmental agency, and the agency is no longer abiding by the stipulations of the agreement, the Department may conduct a study to determine if the system is warranted. If continuation of the system is not found to be cost effective, INDOT may remove it as described in Section 78-2.10.

8. Other Construction Project. Where a proposed construction project (e.g., roadway reconstruction project) is within city or town incorporation limits, the following will apply relative to lighting.

a. If the existing lighting system is owned by the local agency and the project requires the system to be relocated, INDOT will be responsible for all relocation expenses.

b. If the existing lighting system is owned by a utility company and the project requires the system to be relocated, the utility company will be responsible for all relocation expenses.

c. If there is no existing lighting and it is requested by the local agency, INDOT will include the lighting system in the project if the local agency agrees to pay for all installation costs and will take responsibility for the operation and maintenance of the system.

d. If the existing luminaire arms are mounted on utility company poles and the lighting hardware is owned by the local agency, INDOT will be responsible only for the relocation expenses associated with the lighting hardware, if requested by the local agency. No upgrades in the existing lighting are accomplished under this option.

78-1.04 Lighting Studies

If a request is made for a new lighting installation along a State-maintained highway outside of incorporation limits, the following procedure should be used.

1. Lighting Request. The local agency or other local group seeking the lighting system is required to submit a request to the district Traffic Team petitioning the Department to consider the installation of a new lighting system along the State highway.

2. Lighting Study. The district Traffic Team will conduct a study to determine if the request justifies further action. Each lighting study report should include the Highway Lighting Accident Warrant Analysis.

3. Programming. If the location warrants lighting and it is outside the corporate limits, the district Traffic Team will request the Planning Division to initiate a project to provide lighting at the location.

78-2.0 WARRANTS

Providing lighting along every highway is not practical or cost effective. The district Traffic Team will be responsible for determining if the lighting system is economically justified along a State-maintained highway. It is the Department's practice to only provide lighting if there is an average of seven night accidents per year, and the night-to-day ratio of accidents is greater than 0.5. A blank Highway Lighting Accident Analysis Worksheet is shown as Figure 78-2B. An editable version of this form may also be found on the Department's website at www.in.gov/dot/div/contracts/design/dmforms/. The appendices referred to in the worksheet are shown in Figure 78-2C. Local officials may determine the feasibility of providing lighting within city or town limits. A location which satisfies these warrants does not obligate INDOT to provide funding for the requested highway lighting project. INDOT's objective is to identify each roadway which should be considered in the process of setting priorities for the allocation of available funding to a roadway-lighting project. For a lighting system to be considered, it should satisfy the warrants provided below.

78-2.01 Freeway

Where warranted, INDOT is responsible for providing highway lighting along each Interstate route or other State-maintained freeway outside corporate limits. A city or town is responsible for lighting along a non-Interstate-route freeway which is within its corporate limits. Continuous freeway lighting (CFL) should be considered where one or more of the following warrants are satisfied.

1. Accidents. CFL should be considered where there are a significant number of nighttime accidents that can be attributed to the lack of lighting and where it can be supported by a cost-effective analysis.

2. Nearby Development. CFL should be considered, for a length of at least 3.0 km, where the freeway passes through a substantially-developed suburban or urban area, and where one or more of the conditions exist as follows:

   a. the nearby local traffic operates on a street system that has some form of complete street lighting and which has some parts that are visible from the freeway;

   b. the freeway passes through a series of developments such as a residential, commercial, industrial, or civic area, college, park, terminal, etc., that has roads, streets and other areas that are lighted;

   c. separated cross streets, both with and without connecting ramps, are within 1 km of each other and are lighted as part of the local street system; or

   d. the freeway cross-section elements (e.g., median, right of way) are substantially narrower than desirable widths used for a rural section due to high right-of-way costs and adjacent developmental restrictions.

3. Interchange. CFL should be considered where 3 or more successive interchanges are illuminated and have an average spacing of 2.5 km or less between them. Where CFL is provided through the interchange, complete interchange lighting should also be provided. See Section 78-2.02 for additional information on interchange lighting.

78-2.02 Interchange

Interchange lighting can consist of either complete interchange lighting (i.e., all ramps, the mainline, and the cross street are lighted) or partial interchange lighting (e.g., gores, intersection). The Department's practice is that, once it has been determined that continuous freeway lighting is warranted, complete interchange lighting should also be provided. Interchange lighting along an unlighted freeway should be considered where the following conditions occur.

1. Accidents. Lighting may be warranted where there are a significant number of nighttime accidents that can be attributed to the lack of lighting and where it can be supported by a benefit/cost analysis. Once lighting is considered warranted, the choice between complete and partial interchange lighting will be determined based on ramp traffic

volume. Complete interchange lighting will be provided where the total current average nighttime volume of all ramp traffic entering or leaving the freeway within the interchange area exceeds the value shown in Figure 78-2A, Minimum Traffic Volume for Complete Interchange Lighting. If only partial lighting is considered cost effective, then only partial lighting should be provided regardless of the traffic volume.

2. Nearby Development. Complete interchange lighting should be considered where nearby development, commercial or industrial, is lighted and is located within the immediate vicinity of the interchange, or where the crossroad approach legs are lighted for 1 km or more on each side of the interchange.

3. Ramp Terminal. The intersection of the ramps and the crossroad at an interchange may be considered as a separate intersection or as part of the interchange depending on the condition and location of accidents.

78-2.03 Warrants for Street or Highway Other Than a Freeway

Where warranted, the Department is responsible for installing and maintaining a lighting system on a State-maintained highway outside city or town corporate limits.

Lighting should be considered where a highway section or intersection has a significant number of accidents (an average of at least seven nighttime accidents per year) that can be attributed to the lack of lighting and where the night-to-day accident ratio is greater than 0.5. The lighting system must also be shown to be cost effective using the Highway Lighting Accident Warrant Analysis Worksheet shown as Figure 78-2B. A highway section where lighting should be considered is that with a relatively high potential for numerous accidents, such as a section with numerous driveways, channelized islands, significant commercial or residential development, a high percentage of trucks, or geometric deficiencies.

Where a State-maintained highway intersects with or closely parallels local streets with existing lighting or which may have future lighting, provisions should be made for possible future illumination on the State-maintained highway.

78-2.04 Highway-Sign Lighting

A sign may be internally illuminated or externally illuminated by a direct source. Street or highway lighting does not satisfy the requirements for sign illumination. Section 75-2.03 provides the Department guidelines for sign illumination.

78-2.05 Rest Area

Lighting will be provided for all areas within a rest area that have pedestrian activities. Rest area ramps are also lighted, especially if continuous lighting is provided on the freeway. Highway-type light standards and luminaires should be used to light the parking areas as well as the ramps.

78-2.06 Truck Weigh Station

Each permanent truck weigh station should be lighted where weighing will occur after daylight hours. Highway-type light standards and luminaires should be used to light the weighing area, parking areas, speed change lanes, and ramps. Lighting may be provided for the sign preceding a truck weigh station which indicates that the station is open or closed.

78-2.07 Bridge Structure

The designer should consider the following in determining the need for lighting on a bridge structure.

1. Lighted Approaches. Lighting should be placed across or under a bridge where one or both approaches have or are planned to have lighting. Ownership of the lighting will be determined in the same manner as for a roadway.

2. Geometrics. Lighting may be considered for a long, narrow bridge even though the approaches are not lighted. Lighting should be considered where there is unusual or critical roadway geometry under or adjacent to the underpass area.

78-2.08 Tunnel

The lighting of a tunnel should be in accordance with the AASHTO *An Informational Guide for Roadway Lighting.*

78-2.09 Other Location

In addition to the above, lighting should be considered at the locations as follows:

1. commuter park-and-ride lot;
2. bikeway;
3. walkway; or
4. other pedestrian facility.

The need for lighting at one of these locations will be determined as required for each situation.

78-2.10 Reduction or Removal of Lighting

Where an existing highway lighting system is no longer warranted, feasible, or cost effective, it should be considered for reduction in the lighting level or be removed. Where light levels are reduced, they should not be reduced below the criteria described in Section 78-6.0. Prior to reducing lighting or removing the system, an engineering investigation will be required. Concurrence by the Production Management Division and approval by the Commissioner will be required. If Federal-aid funds were used for the original installation and the project is on the National Highway System and is not exempt from FHWA oversight, a copy of the report should be submitted to the FHWA.

If determining whether an existing lighting system should be removed or the lighting reduced, the designer should consider the following.

1. Freeway Lighting. Remove or reduce continuous freeway lighting where a cost analysis shows that such action would be cost effective. The cost analysis will be similar to the one prepared for the installation of a new lighting system. However, this study will need to consider the increase in accidents and cost to remove the system. Assume a 50 percent increase in nighttime accidents over a period of three years for analysis purposes.

2. Interchange Lighting. Reduce complete interchange lighting to partial interchange lighting where the average ramps' traffic volume falls below that shown in Figure 78-2A, Minimum Traffic Volume for Complete Interchange Lighting. An engineering analysis will be required to determine the extent of lighting reduction. Removal of complete or partial lighting will require a cost analysis to determine the cost effectiveness of removing the lighting system. Assume a 50 percent increase in nighttime accidents for analysis purposes.

3. Non-Freeway Lighting. Where lighting is no longer warranted on a non-freeway section, a benefit/cost analysis should be conducted to confirm that the lighting is no longer warranted. Section 78-1.03 describes the procedures for removal of lighting if the local agency no longer can or is willing to pay the maintenance and operation costs for the lighting system.

4. Sign Lighting. Removal of sign lighting may be considered where the traffic volume for a ramp falls below that shown in Figure 75-2A. A minimum of three traffic-volume counts should be conducted to justify the removal of lighting. Counts should not be

taken less than 9 months or more than 2 years apart. The counts should show either steady or declining nighttime volumes. Counts from other studies may be used.

5. Obsolete or Substandard System. Where it has been determined that a lighting system is obsolete, substandard, or is beyond its useful service life, it should be removed, replaced, or modified. An engineering investigation should be conducted to determine the appropriate action. If removal is considered, local input should be included in the investigation. A new replacement system should only be installed if it satisfies the warrants for a new system. Current accident data may be used for the analysis. However, the data should be adjusted to reflect the expected increase in accidents if the system is removed.

To study the effects of removing or reducing lighting, the Department may turn off part or all of the system. This may only be performed after an engineering analysis has been conducted to determine the expected effect of turning the lights off. This study period should not be less than one year or more than four years. After the study has been completed, the system may be either re-energized or removed.

After the decision has been made to remove or reduce the level of highway lighting, the lights should be turned off but left in place for a period of at least one year and not longer than four years. An accident analysis study will be required during this time period to determine the effects of the reduced lighting. A final cost analysis will be required with the updated accident and capital-improvement data. A system removal will be accomplished either by State forces or by a contractor as part of other project work.

78-3.0 LIGHTING EQUIPMENT

A number of options are available to the designer in selecting luminaire equipment that will satisfy the desired design criteria. Figure 78-3A, Typical Luminaire, provides an illustration of the various parts of the lighting standard and luminaire. In addition to the INDOT *Standard Drawings* and the INDOT *Standard Specifications*, the following provides guidance regarding INDOT's preferred lighting equipment.

The designer should ensure that the selected equipment is in accordance with standard hardware designs. Specialized equipment and designs can significantly increase the installation and maintenance costs, thereby reducing the cost effectiveness of the lighting system.

78-3.01 Foundation

Upon determining the foundation design, the designer should consider the following.

1. Material. Each foundation for a permanent installation should be of Class A concrete. It may be either cast-in-place or precast.

2. Design. The INDOT *Standard Drawings* provide the details for depth, width, reinforcing, etc., for both conventional and high-mast light standards. For a high-mast foundation, a soil survey may be required to determine if additional support may be required.

3. Placement and Grading. The INDOT *Standard Drawings* and Section 78-6.05 provide the Department's criteria for the placement of a light standard relative to the roadway and ditch lines. They also provide criteria for grading around the light-standard foundation.

78-3.02 Light Standard, or Pole

A major factor in highway lighting design is the selection of the luminaire and the mounting height. A higher mounting height will reduce the number of light standards required. The INDOT *Standard Specifications* and the AASHTO *Standard Specifications for Structural Supports for Highway Signs, Luminaires and Traffic Signals* provide the Department's criteria for light standards. The following describes the light standards used by the Department.

1. Conventional. This pole type is used most often. It has a mounting height ranging from 9 m to 15 m. INDOT practice is to use a light pole with a mounting height between 12 m and 15 m. The recommended minimum mounting height is 12 m.

2. High-Mast. A high-mast pole can range from 24 m to 60 m in height. This is an excellent choice for where there is a large area that requires lighting (e.g., interchange). The use of high-mast lighting and higher-wattage lamps greatly reduces the number of poles, yet retains the quality of the lighting. The designer should consider using high-mast lighting where practical.

3. Materials. Light standards for a permanent installation are made of galvanized steel, stainless steel, or aluminum. Wood poles are used as service poles or for temporary lighting (e.g., in a construction zone). High-mast poles are made of weathering steel. The INDOT *Standard Specifications* provide the material requirements for light standards used by INDOT.

4. Base. Unless otherwise protected, a breakaway base should be provided for all each light pole within the clear zone along a rural or high-speed urban highway. However, where pedestrians are commonly present, a breakaway base should not be used. Section 78-6.05 provides additional criteria on the appropriate application of where to use a

breakaway or non-breakaway base. Each breakaway base should be in accordance with the AASHTO *Standard Specifications for Structural Supports for Highway Signs, Luminaires, and Traffic Signals*. The base types include the following.

a. Breakaway Transformer Base. A transformer base consists of an aluminum apron between the concrete foundation and the base of the pole. The breakaway transformer base is designed to be struck by a car's bumper. Once hit, the base deforms and breaks away. All wiring inside the base must also be connected to the breakaway device. INDOT's practice is to use the cast-aluminum transformer base.

b. Non-Breakaway Steel Transformer Base. A steel transformer base is similar in design to an aluminum base. However, it is not in accordance with the AASHTO breakaway criteria. Section 78-6.05 discusses the appropriate locations where a breakaway base is not required.

c. Breakaway Support Coupling. A breakaway support coupling is an aluminum connector or sleeve which is designed to shear when the pole is hit. The bottom of the coupling is threaded onto the foundation anchor bolts, and the light standard is attached to the top of the coupling. Four couplings are used with each light standard. Support couplings are 120 mm long.

d. Anchor Base. An anchor base is a metal plate which is welded to the bottom of the luminaire support. The plate allows the post to be bolted to the foundation without an intermediate breakaway device or to a breakaway coupling, slip plate, or transformer base.

5. Structural Design. Each light standard should be in accordance with the structural-design criteria described in the INDOT *Standard Specifications*, including the criteria for wind loading, maximum horizontal deflection, maximum stresses, luminaire loads, material strengths, welds, bolts, etc.

6. Effective Mounting Height. A light standard must be constructed so that it provides a luminaire mounting height above the roadway pavement as shown in Figure 78-3A, Typical Luminaire. After determining the mounting height, the appropriate pole length can then be determined.

78-3.03 Mast Arm

A mast arm allows placement of the light source near the edge of the travel lane. The use of a longer mast arm is recommended, although the initial costs may be higher. A longer mast arm

allows the pole to be placed farther from the traveled way, thus providing a safer roadside environment. Otherwise, the use of a longer mast arm may have a negative effect on the loading capabilities of the base. In addition to the INDOT *Standard Specifications*, the following provides information and design guidance on the mast arms used by INDOT.

1. Material. Mast arms are made of the same material as the light standard.

2. Aluminum Mast Arm. The following should be used to determine the appropriate mast-arm type.

    a. Less than 2.4 m. This may be either of the single-member or the truss-type design. The design should be consistent with other nearby mast arm types.

    b. 2.4 m or Longer. This should be of only the truss-type design.

3. Galvanized Steel Pole. A constant-cross-section mast arm may be used. The mast arm should be of the truss-type design, fabricated from a 50-mm-diameter steel pipe.

4. Bridge. Each mast arm for a bridge-deck light standard should be of the truss-type design.

5. Rise. Figure 78-3B, Mast Arm Rise Versus Length, provides the maximum rise (see Figure 78-3A) that should be used based on the mast-arm length.

78-3.04 Luminaire

A luminaire is defined as a complete lighting unit consisting of a lamp or lamps together with the parts designed to distribute light. The following and the INDOT *Standard Specifications* provide the Department's criteria for luminaire hardware. Section 78-6.03 discusses the various light distributions for a luminaire. For additional information, the designer should contact the Highway Operations Division's Office of Traffic Engineering for the latest products and specifications.

78-3.04(01) Light Source

There are numerous light sources for highway lighting. However, there are only a few practical choices when considering availability, size, power requirements, and cost effectiveness. Only a high-intensity discharge light source should be used. The following provides information on the recommended light sources that may be used.

1. High-Pressure Sodium (HPS). Due to its excellent luminous efficiency, power usage, and long life, HPS is the only light source that INDOT is using for each new installations of conventional or high-mast lighting. The HPS lamp produces a soft, pinkish-yellow light by passing an electric current through a sodium-and-mercury vapor.

2. Low-Pressure Sodium (LPS). Low-pressure sodium is considered one of the most efficient light sources. Its disadvantage is that it requires long tubes and has poor color quality. INDOT does not allow the use of LPS in a State-controlled system. However, a local agency may consider the use of an LPS lighting source. The LPS lamp produces a yellow light by passing an electrical current through a sodium vapor.

3. Mercury Vapor (MV). Prior to the introduction of HPS, mercury vapor was the most commonly used light source. A local agency may still install the MV light source for a new installation to match an existing installation. However, INDOT does not allow the use of MV for conventional or high-mast lighting in a new installation. MV usage by INDOT is limited to overhead-sign lighting. The mercury-vapor lamp produces a bluish-white light.

4. Metal Halide (MH). A metal-halide lamp produces better color at higher efficiency than an MV lamp. However, life expectancy for an MH lamp is shorter than for HPS or MV. An MH lamp is also more sensitive to lamp orientation than another light source. The MH lamp is used for lighting a sports arena or major sports stadium, for high-mast lighting, or for lighting a downtown area or park. Metal halide produces good color rendition. Light is produced by passing a current through a combination of metallic vapors.

78-3.04(02) Optical System

The optical system consists of a light source, a reflector, and, usually, a refractor. The following discusses the optical system of a luminaire.

1. Light Source. Section 78-3.04(01) discusses the recommended high-intensity light sources that should be considered.

2. Reflector. The reflector is used in optical control to change the direction of the light rays. Its purpose is to take that portion of light emitted by the lamp that otherwise would be lost or poorly utilized, and to redirect it to a more desirable distribution pattern. A reflector is designed to work either alone or with a refractor. Reflectors can be classified into two types, specular or diffuse. A specular reflector is made from a glossy material that provides a mirror-like surface. A diffuse reflector is used where the intent is to spread the light over a wider area.

3. Refractor. The refractor is another means in optical control to change the direction of the light. A refractor is made of a transparent, clear material, usually high-strength glass or plastic. Plastic is used in a high-vandalism area. However, plastic may yellow over time due to heat and ultraviolet exposure. The refractor, through its prismatic construction, controls and redirects both the light emitted by the lamp and the light reflected off the reflector. It can also be used to control the brightness of the lamp source.

78-3.04(03) Ballast

Each luminaire must include a built-in ballast. A ballast is used to regulate the voltage to the lamp to ensure that the lamp is operating within its design parameters. It also provides the proper open-circuit voltage to start the lamp. INDOT uses the auto-regulator type ballast with an input voltage variation of ±10% of the rated operating voltage specified. Figure 78-5A, Lamp Data, provides the approximate expected operating wattage for a ballast based on the lamp wattage.

78-3.04(04) Housing Unit

Luminaire housing requirements are dependent upon the application type. When selecting a luminaire housing, the designer should consider the following.

1. Roadway-Lighting Luminaire. A roadway-lighting-luminaire housing or specular-reflector holder is made of aluminum with a weatherproof finish. The housing unit should allow access from the street side and allow for adjustments to the light. The luminaire should also have a high-impact, heat-resistant, glass, prismatic refractor. The unit should be sealed to ensure that dust, moisture, or insects will not be able to enter the inside of the luminaire.

2. Sign Luminaire. A sign luminaire requires the same housing as a roadway-lighting luminaire, except that it should also provide a durable, plastic, vandal-resistant shield and an aluminum shield that blocks the view of the refractor from an approaching motorist. The unit is attached to the sign walkway as shown on the INDOT *Standard Drawings.* The mounting attachment is adjustable to allow for directing the light onto the sign.

3. Underpass Luminaire. An underpass luminaire requires the same housing as a roadway-lighting luminaire, except that it should also provide a durable, plastic, vandal-resistant shield. The ballast may be placed as shown on the INDOT *Standard Drawings*. An underpass luminaire may be attached to the vertical-side surface of a bridge bent structure, or may be suspended by the use of a pendant.

4. High-Mast Luminaire. A high-mast luminaire is an enclosed aluminum unit with a reflector and a borosilicate glass refractor. The unit should be sealed to ensure that dust, moisture, or insects will not be able to enter the inside of the luminaire. The luminaire is attached to the mast ring. The mounting attachment is adjustable to allow for directing the light.

78-3.05 Other Equipment

In developing a highway-lighting system, there are numerous components of the equipment design that can affect the design. Many of these elements are addressed in the INDOT *Standard Drawings*, the INDOT *Standard Specifications* and the manufacturer's criteria. Some of these elements include the following.

1. Electric Components. The above sources discuss electrical components, including ballasts, fuses, photoelectric controls, wiring, conduit, handholes, connections, breaker boxes, circuit breakers, relay switches, etc.

2. High-Mast Light Standard. Some of the additional components for a high-mast standard include the luminaire ring assembly for attaching a luminaire, head frame assembly, winch assembly, external drive system used to lower the luminaire for maintenance, cable terminator, and lightning rod.

78-4.0 LIGHTING METHODOLOGIES

The lighting-design methodologies are those for illuminance, luminance, and small-target visibility. The Illuminating Engineering Society (IES) of North America has been the leader in the development of these procedures. INDOT policy is to use only the illuminance methodology in its design of highway lighting. For additional information on these procedures, the designer should review the references listed in Section 78-1.01.

78-4.01 Illuminance

The illuminance methodology is the oldest and simplest to use. Illuminance is defined as the density of the luminous flux incident on a surface measured in lux. The methodology is concerned with the measurement of the light's intensity striking a particular point on the pavement. The brightest spot will occur directly under the luminaire and diminish the farther a motorist is away from the source. The disadvantage of this methodology is that one does not see incident light, but instead sees the light reflected from an object or surface. This sensation is

known as brightness, with objects distinguished by the difference in brightness or contrast. Brightness can be expressed mathematically as luminance, or the luminous intensity per unit area directed towards the eye.

The factors in illuminance methodology are the measurement of average maintained horizontal illumination, E_h, and the uniformity ratio of the average-maintained illuminance to the minimum-maintained illuminance.

78-4.02 Luminance

Luminance is defined as the luminous intensity of a surface in a given direction per unit of projected area of the surface as viewed from that direction. It is measured in candelas per square meter. The luminance methodology is concerned with the measurement of light from the luminaire reflecting off the pavement surface to the motorist's eyes. This measurement is affected by the pavement's reflectivity characteristics. To obtain the lighting measurements for the roadway, readings are taken from a set of observation points spread across the roadway in a grid pattern. Compared to the illuminance methodology, the luminance methodology is considered a more-accurate representation of the motorist's visibility requirements. However, the methodology is significantly more complicated to understand and use. Also, the pavement reflectivity must be estimated for the current time and for the future.

The design factors in luminance design include average maintained luminance L_{avg}, minimum luminance, L_{min}, maximum luminance, L_{max}, maximum veiling luminance, L_v, and ratios of L_{avg} to L_{min}, L_{max} to L_{min}, and L_v to L_{avg}. The Department is not using this methodology in lighting-determination design.

78-4.03 Small-Target Visibility (STV)

IES has proposed the STV methodology in an effort to better-define actual visibility requirements of the motorist. This methodology is similar to the luminance methodology in measurement of the light's reflectivity but, instead of measuring the pavement's reflectivity, it measures the reflectivity of a 180-mm-diameter flat, square target with 20% diffuse reflectance against the pavement background. The target is perpendicular to the roadway surface and is always located a fixed distance of 83 m ahead of the observer. The observer's target sight line is parallel to the centerline of the roadway. The STV methodology is significantly more complex than the other methodologies and is considered impossible to calculate manually, therefore, a computer is required. INDOT does not recommend the use of the STV methodology.

78-5.0 DESIGN PROCEDURE

The following provides guidelines on the lighting-design procedure used by INDOT. For additional design information, the designer should also review the references listed in Section 78-1.01.

Lighting-system design may require several iterations to produce an acceptable design. If, after the first run, the design criteria are not satisfied, the designer will need to change the initial parameters (e.g., pole spacing, mounting height, luminaire wattage) and recheck the design to determine if it then satisfies the criteria. This process is repeated until the design is optimized and all criteria are satisfied.

78-5.01 Computerized Design

To determine an acceptable lighting system requires numerous iterations using numerous variables. The chance for error in manually solving its equations is high. Therefore, the designer should use one of the commercial computer software packages that are available.

Each software package requires the same input and performs the same calculations. However, the method of input may vary significantly. With the proliferation of software programs, the user should first determine which programs are currently acceptable to INDOT. The Department is using the PC-based program ILLUM$, developed by General Electric, for its lighting calculations. ILLUM$ is used to generate templates for design and to check lighting levels and uniformity.

For a lighting design prepared by a consultant, it should provide the Production Management Division's Traffic Review Team with the design data inputs and reports.

78-5.02 Design Process

The following provides the procedural steps in designing a lighting system.

1. Assemble Information. Assemble all necessary information. This includes the following:

    a. contact the Traffic Review Team for the current design policies and procedures applicable to the project, sample plans, schedules, pay quantities, and example calculations;

b. gather roadway and bridge plans including plan and profile sheets and details sheets (e.g., those for overhead signs);

c. determine existing and expected utility locations;

d. discuss special considerations with the road or bridge designer;

e. conduct field reviews; and

f. if a local-agency project, hold discussions with local officials.

2. Determine Classifications. Determine the roadway classification and environmental conditions. If not already included in the project report, this information can be obtained from the Environmental Policy Team. The roadway classifications, for lighting purposes, are defined in Section 78-6.01.

3. Select Design Criteria. Based on the above information, the designer will select the pertinent design methodology (see Section 78-4.0) and the appropriate criteria based on the classification selected in Step 2; see Section 78-6.02. For an INDOT-route lighting project, only the illuminance design methodology should be used.

4. Select Equipment. In the preliminary design, the designer will need to make some initial assumptions regarding the equipment composition. This includes mounting height, pole setback distance, light source, mast-arm length, lamp wattage, etc. INDOT's practice is to use a 12-m height pole with HPS lamps of 250-W or 400-W. Figure 78-5A, Lamp Data, provides the information on lighting levels for various lighting sources. See Sections 78-3.0 and 78-6.03 for additional details on equipment selection. After selecting the luminaire equipment, the designer will also need to obtain the photometric data sheet from the manufacturer for the luminaire selected.

5. Select Layout Arrangement. Section 78-6.04 provides information on the commonly used lighting arrangements. The selection of the appropriate layout design depends upon local site conditions and the engineer's judgment. Section 78-6.05 provides the roadside-safety considerations in selecting the lighting arrangements. Section 78-6.06 provides other layout considerations.

6. Luminaire Spacing. For an INDOT-route lighting project, use the illuminance methodology to determine the appropriate luminaire spacing. This step is conducted by the computer. For hand calculation, Equation 78-5.1 should be used. Sections 78-1.02 and 78-6.03 define the variables used in the equation.

$$S = \frac{(LL)(CU)(LLD)(LDD)}{WE_h} \qquad \text{(Equation 78-5.1)}$$

Where:	S	=	Luminaire Spacing (m)
	LL	=	Initial Lamp Lumens
	CU	=	Coefficient of Utilization
	LLD	=	Lamp Lumen Depreciation Factor
	LDD	=	Lamp Dirt Depreciation Factor
	E_h	=	Average Maintained Level of Illumination (lx)
	W	=	Width of Lighted Roadway (m)

7. Check Uniformity. Once the spacing has been determined, the designer should check the uniformity of light distribution and compare this to the criteria selected in Step 3. Use Equation 78-5.2 to determine the uniformity ratio. Section 78-7.0 provides an example for calculating the uniformity ratio.

$$Uniformity\ Ratio = \frac{Average\ Maintained\ Illumination\ Value}{Minimum\ Maintained\ Illumination\ Value} \qquad \text{(Equation 78-5.2)}$$

8. Select Optimum Design. Because recalculations by computer are relatively quick and easy, the designer should try several alternatives even if one design satisfies the criteria. There is often more than one satisfactory alternative.

9. Electric Design. Once the number, size, and location of the luminaires are determined, the designer will need to determine the appropriate electric voltage drop for the system. Section 78-6.07 provides information on how to determine the voltage drop for the lighting system.

10. INDOT Pre-Design Approval. For a consultant-designed project, the consultant should discuss the optimum alternatives with the Traffic Review Team prior to preparing the plans in order to expedite project development. Upon approval from INDOT, FHWA if necessary, and the local utility company, the final development of the plans may proceed.

11. Prepare Plans. Once the final design has been selected, the lighting designer will prepare and submit to the Traffic Review Team the plan sheets, quantities, cost estimate, voltage drop calculations, circuit schematic layouts, and special provisions that are required for review.

78-6.0 DESIGN CONSIDERATIONS

In designing a lighting system, there are many elements or factors the designer must consider. To help the designer in this process, the IES has standardized many of these elements. However, not all elements are appropriate. In addition to the following, Figure 78-6A, INDOT Lighting Design Parameters, provides guidance regarding the design values used for a lighting design.

78-6.01 Roadway Classification

In selecting the appropriate design criteria, the designer must determine the highway's functional classification (Section 78-5.02, Step 2). The following definitions are used to define roadway classification for highway-lighting purposes only.

1. Freeway. A divided major roadway with full control of access and with no crossings at grade. This definition applies to a toll or non-toll road. An Interstate highway is a freeway.

2. Expressway. A divided major roadway for through-traffic with partial control of access and with interchanges at major crossroads. An expressway for noncommercial traffic within a park or park-like area is considered a parkway.

3. Arterial. That part of the roadway system which serves as the principal network for through-traffic flow. Such a route connects areas of principal traffic generation and important rural highways entering a city. For an INDOT project, use the city-street design criteria.

4. Collector. This is a distributor or collector roadway servicing traffic between arterial and local roadways. This is used for traffic movements within a residential, commercial or industrial area. For an INDOT project, use the city-street design criteria.

5. Local Road. This is used for direct access to residential, commercial, industrial, or other abutting property. It does not include a road which carries through traffic. A long local road will be divided into short sections by collectors. For an INDOT project, use the city-street design criteria.

6. Sidewalk. A paved or otherwise improved area for pedestrian use, located within the public-street right of way which also includes the roadway for vehicular traffic.

7. Pedestrian Walkway. A public walk for pedestrian traffic not necessarily within the right of way for a vehicular-traffic roadway. This includes a skywalk or pedestrian overpass, sub walk or pedestrian tunnel, walkway providing access to a park or block interior, or mid-block street crossing.

8. Isolated Interchange. A grade-separated roadway crossing which is not part of a continuously lighted system, with one or more ramp connections with the crossroad.

9. Isolated Intersection. The area where two or more non-continuously lighted roadways join or cross at the same level. This area includes the roadway and roadside facilities for traffic movement in that area. One type of isolated intersection is the channelized intersection in which traffic is directed into definite paths by means of islands with raised curbs.

10. Bikeway. A road, street, path, or way that is specifically designated as being open to bicycle travel, regardless of whether such facility is designed for the exclusive use of bicyclists or will be shared with other transportation modes.

    a. Type A: Designated Bicycle Lane. A portion of roadway or shoulder which has been designated for use by bicyclists. It is distinguished from the portion of the roadway for motor-vehicle traffic with a paint stripe, curb, or other similar device.

    b. Type B: Bicycle Path. A separate trail or path from which motor vehicles are prohibited and which is for the exclusive use of bicyclists or the shared use of bicyclists and pedestrians. Where such a trail or path forms a part of a highway, it is separated from the roadway for motor-vehicle traffic with an open space or barrier.

78-6.02 Design Criteria

The lighting criterion varies according to the design methodology, highway classification, area classification, and pavement type. The following provide AASHTO and INDOT lighting design criteria.

1. Figure 78-6B provides the recommended INDOT roadway-illuminance-design criteria.

2. The AASHTO *An Informational Guide for Roadway Lighting* provides the recommended illuminance-design criteria for a pedestrian walkway, bikeway path, or local-agency project.

78-6.03 Equipment Considerations

Figure 78-6C, Luminaire Geometry, illustrates the common terms used in defining and designing luminaires (e.g., mounting height, overhang, rotation). The following discusses other equipment considerations for design.

78-6.03(01) Light Distribution

In determining the lighting-design layout, the designer must know the expected light distribution for the luminaire. The designer may obtain photometric data from luminaire manufacturers. The proper distribution of light from the luminaire is a major factor in the design of efficient lighting. Figure 78-6D, Luminaire Classification System, provides three IES classifications for luminaire light distributions: width, spacing, and glare control. Figure 78-6E, Guide for Luminaire Lateral Light Type and Placement, provides additional guidance on the selection of luminaires based on these classifications. Figure 78-6F, Plan View for Luminaire Coverage, illustrates a plan view of a roadway which has been modified to present a series of Longitudinal Roadway Lines (LRL) and Transverse Roadway Lines (TRL) and how these distribution factors are interrelated to each other. The following briefly describes these classifications.

1. Vertical Light Distribution. Vertical light distribution can be short, medium, or long. The selection of a vertical light distribution is dependent upon the mounting height and light source. Pavement brightness is increased if the vertical light angle is increased. The following defines the vertical-light distribution types.

    a. Short Distribution. The maximum luminous intensity strikes the roadway surface between 1 and 2.25 mounting heights from the luminaire. The theoretical maximum spacing is 4.5 mounting heights.

    b. Medium Distribution. The maximum luminous intensity is between 2.25 and 3.75 mounting heights from the luminaire. The theoretical maximum spacing is 7.5 mounting heights. This is the most commonly-used distribution type.

    c. Long Distribution. The maximum luminous intensity is between 3.75 and 6.0 mounting heights from the luminaire. The theoretical maximum spacing is 12 mounting heights.

2. Lateral Light Distribution. The IES has developed the lateral light distributions which are provided in Figure 78-6F. The following provides information on the placement for lateral light distribution.

    a. Type I. The luminaire is placed in the center of the street or area where lighting is required. It produces a long, narrow, oval-shaped lighted area. Some types of high-mast lighting are also considered a modified form of Type I.

    b. Type I, 4-Way. The luminaire is placed in the center of the intersection and distributes the light along the four legs of the intersection. This type applies to high-mast lighting.

c. Type II. The luminaire is placed on the side of the street or edge of the area to be lighted. It produces a long, narrow, oval-shaped lighted area which is applicable to a narrow-width street.

d. Type II, 4-Way. The luminaire is placed at one corner of the intersection and distributes the light along the four legs of the intersection.

e. Type III. The luminaire is placed on the side of the street or edge of area to be lighted. It produces an oval-shaped lighted area and is applicable to a medium-width street.

f. Type IV. The luminaire is placed on the side of the street or edge of area to be lighted. It produces a wider, oval-shaped lighted area and is applicable to a wide street.

g. Type V. The luminaire is placed in the center of the street, intersection, or area where lighting is required. It produces a circular, lighted area. Type V can be applied to high-mast lighting.

3. Control of Distribution. As the vertical light angle increases, discomforting glare also increases. To distinguish the glare effects on the motorist from the light source, IES has defined the glare effects as follows.

a. Cutoff. This occurs where the luminaire's light distribution is less than 25,000 lm at an angle of 90 deg above nadir (vertical axis), and less than 100,000 lm at a vertical angle of 80 deg above nadir.

b. Semi-cutoff. This occurs where the luminaire's light distribution is less than 50,000 lm at an angle of 90 deg above nadir, and less than 200,000 lm at a vertical angle of 80 deg above nadir. This is the distribution used for lighting design.

c. Non-cutoff. This occurs is where there is no limitation on the zone above the maximum luminous intensity.

78-6.03(02) Mounting Height

A higher wattage bulb allows a higher mounting height, fewer luminaries, and fewer support poles, and still maintains the lighting quality. A higher mounting height tends to produce the most efficient design. For practical and aesthetic reasons, the mounting height should remain

constant throughout the system. The manufacturer's photometric testing results are required to determine the appropriate adjustments for mounting height.

78-6.03(03) Coefficient of Utilization

The coefficient-of-utilization curve defines the percentage of bare lamp lumens that are required to light the desired surface. Figure 78-6G illustrates a sample coefficient-of-utilization curve. The curve and the Isolux diagram are used to determine the amount of illumination to a given point on the pavement. The curve provides a value for the street side of the luminaire and the private-property side. If the luminaire is located over the roadway, the private-property-side value should also be used to determine the level of illumination. The manufacturer is required to provide these charts with its photometric testing results.

78-6.03(04) Light-Loss Factor (Maintenance Factor)

The efficiency of a luminaire is reduced over time. The designer must estimate this reduction to properly estimate the light available at the end of the lamp-maintenance life. The maintenance factor may range from 0.50 to 0.90, with the optimum range from 0.65 to 0.75. Figure 78-6A, INDOT Lighting Design Parameters, provides the factors used for designing a lighting system. The maintenance factor is the product of the following.

1. Lamp Lumen Depreciation Factor (LLD). As the lamp progresses through its service life, the lumen output of the lamp decreases. The initial lamp lumen value is adjusted by means of a lumen depreciation factor to compensate for the anticipated lumen reduction. This ensures that a minimum level of illumination will be available at the end of the assumed lamp life, even though lamp lumen depreciation has occurred. This information should be provided by the manufacturer. An LLD factor of 0.90 should be used. If deemed necessary, another value may only be used with approval from the Office of Traffic Engineering.

2. Luminaire Dirt Depreciation Factor (LDD). Dirt on the exterior and interior of the luminaire, and to some extent on the lamp, reduces the amount of light reaching the roadway. Various degrees of dirt accumulation may be anticipated depending upon the area in which the luminaire is located. Industry; exhaust of vehicles, especially large diesel trucks; dust; etc., all combine to produce dirt accumulation on the luminaire. A higher mounting height, however, tends to reduce vehicle-related dirt accumulation. Information on the relationship between the area and the expected dirt accumulation is shown in Figure 78-6H. An LDD factor of 0.87 should be used. This is based on a moderately-dirty environment and three years' exposure time. If deemed necessary, another value may only be used with approval from the Office of Traffic Engineering.

78-6.04 System Configuration

Figure 78-6 I, Lighting-System Configurations, illustrates the layout arrangement used. Figure 78-6 I also illustrates the recommended illuminance calculation points for the arrangement (Section 78-5.02, Step 7). INDOT does not place light standards in the median, as described below.

1. If no barrier is present, the light standards can be struck by traffic in both directions.

2. If a concrete barrier is present, the light standards are placed atop the barrier. A truck or bus hitting the barrier will lean substantially over the barrier and may strike the light standard.

3. Maintenance of the standards can be a safety concern for a maintenance crew situated in the median lane.

Figure 78-6J illustrates a layout for partial lighting of an interchange.

78-6.05 Roadside-Safety Considerations

The placement of a light standard should be such that it will not reduce roadside safety. However, the physical roadside conditions often dictate the light-standard location. The designer should consider such limitations in the design process. An overpass, sign structure, guardrail, roadway curvature, right-of-way limitation, gore clearance, proximity of another existing roadside obstacle, and the limitations of the lighting equipment are all factors that must be considered in design. The designer also must consider the roadway and area classification, design speed or posted speed limit, safety, aesthetics, economics environmental impacts, etc., while accounting for the physical limitations.

There should be adequate right of way, driveway control, or utility clearance to allow the placement of the proposed light standards according to the safety requirements. Otherwise, additional right of way, driveway control, or utility relocations will be required. The designer should consider the following when determining the location of light poles relative to roadside safety.

1. Breakaway. A conventional light pole placed within the clear zone or the obstruction-free zone will be provided with a breakaway device except at a location with a sidewalk. In addition, the designer should consider the following.

a. Pedestrians. A pole should not be mounted on a breakaway device in an area, including a rest area, where pedestrian traffic exists or is expected.

b. Support. The maximum projection of the portion of a breakaway lighting support that remains after the unit has been struck is 100 mm (see Figure 78-6K, Breakaway Support Stub Clearance Diagram).

c. Breakaway Device. Each breakaway device should be in accordance with the applicable AASHTO requirements for structural supports. It may be one that has been approved for use as a breakaway device; see Section 78-3.0.

d. Wiring. Each pole that requires a breakaway device should be served by underground wiring and should be designed with breakaway connections.

2. Grading. A breakaway light standard, except one shielded by guardrail, should not be located where the opportunity exists for it to be struck more than 230 mm above the point of vehicular bumper impact. Normal bumper height is 460 mm. To avoid a light standard's being struck at an improper height it should be placed as follows.

a. Fill Slope Flatter than 6:1. There are no restrictions on placement of the light standard nor is special grading required. A light standard should be placed 6.0 m from the edge of the travel lane or 3.0 m from the edge of shoulder.

b. Fill Slope of 5:1 or 6:1. The grading plan shown on the INDOT *Standard Drawings* should be followed. A light standard should be placed 6.0 m from the edge of the travel lane or 3.0 m from the edge of shoulder.

c. Fill Slope of 4:1 or Steeper. A light standard should be offset 1.0 m from the edge of shoulder or 3.6 m from the edge of the travel lane, whichever is greater. Grading should be provided as shown on Figure 78-6L, Light-Standard Treatment (Fill Slope of 4:1 or Steeper).

d. Cut Slope. The grading plan as shown on the INDOT *Standard Drawings* should be used to determine the placement of a light standard.

3. Gore Area. A pole should be located to provide adequate safety clearance in the gore area of an exit or entrance ramp, with a minimum of 15 m (see Figure 78-6M, Pole Clearance for Ramp Gore).

4. Horizontal Curve. A pole should be placed on the inside of a sharp curve or loop.

5. Maintenance. In determining a pole location, the designer should consider the hazard which will be encountered while future maintenance is being performed on the lighting equipment.

6. Barrier. The placement of a light standard in conjunction with a roadside barrier should be as described in Section 49-5.0. In addition, the designer should consider the following.

   a. Placement. A light standard should be placed behind the barrier.

   b. Deflection. A pole behind guardrail should be offset by at least the deflection distance of the guardrail (see Section 49-5.01). This will allow the railing to deflect without hitting the pole. If this clearance distance is not available, such as in an extreme side-slope condition, or if the pole is located within the approach end of the railing, a breakaway device should be added. INDOT practice is to always use a breakaway device behind a guardrail.

   c. Concrete Median Barrier. A pole that is shielded by a rigid or non-yielding barrier will not require a breakaway device. However, INDOT practice is to always use a breakaway device behind a rigid or non-yielding barrier.

   d. Impact Attenuator. A pole, either with or without a breakaway device, should be located such that it will not interfere with the functional operation of an impact attenuator or other safety breakaway device.

7. Protection Feature. A feature such as a curb, barrier, or other obstacle constructed primarily to protect a light pole, should not be used.

8. High-Mast Tower. An unprotected high-mast tower should be at least 25 m from the nearest edge of the mainline or ramp travel lane. The minimum clear distance will be the roadway clear-zone width through the area where the high-mast lighting is located. Access for service vehicles should be provided for each high-mast tower or service pole.

9. Existing Installation. An existing breakaway light standard should be evaluated to determine if it is necessary to relocate it, re-grade around its base, or upgrade the breakaway mechanism to current criteria. The determination of the work necessary on an existing breakaway light standard involves a review of numerous variables. Therefore, this decision must be made by the Office of Traffic Engineering. If Federal-aid funds will be used for construction, the project is on the National Highway System, and it is not exempt from FHWA oversight, then the FHWA should also be consulted.

78-6.06 Other Considerations

The designer should review the following if designing of a lighting system.

1. Sign. A pole should be placed to minimize interference with the motorist's view of a highway sign. The luminaire brightness should not detract from the legibility of the sign at night.

2. Overhead Sign. An existing overhead sign's lights should be tied into the new lighting system's circuits.

3. Structure. A pole should be placed sufficiently far enough away from an overhead bridge or overhead sign structure so that the light from the luminaire will not cast distracting shadows on the roadway surface or produce unnecessary glare for the motorist.

4. Tree. A tree should be sufficiently pruned so that it do not cause shadows on the roadway surface or reduce the luminaire's efficiency. The luminaire should be designed with the proper height and mast-arm length to reflect the effect a tree will have on lighting distribution.

5. Retaining Wall. A pole may be located either on top of or behind a retaining wall. A pole mounted atop a retaining wall will require consideration in the retaining-wall design.

6. Median. Although not desirable, a pole may be placed in a median where the width of the median is adequate or if a barrier will be used. The median width should be equal to or greater than the pole's mounting height. Where used, twin poles should have the same mast-arm lengths on each side.

78-6.07 Voltage Drop Determination

A highway-lighting distribution circuit consists of two 240-V circuits provided by a multiple-conductor armored cable. Power supply to the lighting system is 240/480 V, single phase, 60-Hz alternating current. The lights are alternately connected to each side of the four-wire circuit. Ground rods are provided at each light standard. Voltage drop should not be over 10% to the last light in the circuit. Figure 78-6N provides the design amperages for various luminaires. Figure 78-6 O provides resistances for various wire types. Equation 78-6.1 should be used to determine the voltage drop between two adjacent luminaires.

$$E = IR \qquad \text{(Equation 78-6.1)}$$

Where:

E = voltage, or electric potential (volt)
I = current (ampere)
R = resistance (ohm)

The following example illustrates how to calculate the voltage drop for a lighting system.

* * * * * * * * * *

Example 78-6.1

Given: Figure 78-6P, Voltage Drop Calculations (Example 78-6.1), illustrates a single-phase, three-wire balanced load circuit. The circuit includes eight 400-W HPS roadway luminaires with a branch circuit to two 250-W MV sign luminaires. The wire for roadway luminaires is #4 copper and to the sign luminaires #10 copper.

Problem: Determine the voltage drop of the circuit and the percent voltage drop to the last lamp.

Solution: Working from the last luminaire on each branch, the voltage drop can be determined for each circuit branch using Equation 78-6.1 and Figures 78-6N and 78-6 O.

1. Determine the voltage drop for Branch Circuit A:

Luminaire #9 to Luminaire #7: $E_9 = (2)(0.0010105)(60) = 0.1212\ V$

Luminaire #7 to Luminaire #5: $E_7 = (4)(0.0010105)(60) = 0.2425\ V$

Luminaire #5 to Luminaire #3: $E_5 = (6)(0.0010105)(60) = 0.3638\ V$

Luminaire #3 to Luminaire #1: $E_3 = (8)(0.0010105)(60) = 0.4850\ V$

Luminaire #1 to Service Point: $E_1 = (10)(0.0010105)(60) = 0.9095\ V$

Total voltage drop for Branch Circuit A:

0.1212 + 0.2425 + 0.3638 + 0.4850 + 0.9095 = 2.1220 V

2. Determine the voltage drop for Branch Circuit B:

Luminaire #8 to Luminaire #6: $E_8 = (2)(0.0010105)(60) = 0.1212\ V$

Luminaire #6 to Point H: $E_6 = (4)(0.0010105)(45) = 0.1819\ V$

Luminaire #11 to Luminaire #10: $E_{11} = (1.4)(0.0040682)(4) = 0.0228\ V$

Luminaire #10 to Point H: $E_{10} = (2.8)(0.0040682)(15) = 0.1709\ V$

Point H to Luminaire # 4: $E_H = (6.8)(0.0010105)(15) = 0.1031\ V$

Luminaire #4 to Luminaire #2: $E_4 = (8.8)(0.0010105)(60) = 0.5335\ V$

Luminaire #2 to Service Point: $E_2 = (10.8)(0.0010105)(135) = 1.4733\ V$

Total voltage drop for Branch Circuit B:

0.1212 + 0.1819 + 0.0228 + 0.1709 + 0.1031 + 0.5335 + 1.4733 = 2.6067 V

3. Determine the percent voltage drop:

From observation, Branch Circuit B has the most critical voltage drop, 2.6067 V versus 2.1220 V.

$\left(\frac{2.6067}{240}\right)(100\%) = 1.1\%$, which is less than10%.

Therefore, the design is within the allowable voltage drop.

* * * * * * * * * *

78-7.0 HIGH-MAST LIGHTING DESIGN

The design of a high-mast lighting system consists of the same design procedures as discussed in Section 78-5.02. In addition, the designer should consider the following:

1. Lighting Source. A 1000-W high pressure sodium light source should be used. The number of luminaires required will be determined based on the area to be lighted. It can be assumed that a mounting height of 30 m will require 400,000 lm. A mounting height of 35 m or 40 m will require 600,000 lm. A mounting height of 45 m will require 800,000 lm. The number of luminaires per pole ranges from 4 to 6.

2. Mounting Height. This can range from 24 m to 60 m. A height of 30 m to 50 m has proven to be the most practical. A greater height requires more luminaires to maintain

the illumination level. However, a greater height allows for fewer poles and provides better uniformity.

3. Location. In determining the location for a high-mast pole, the designer should review the plan view of the area to determine the more critical areas requiring lighting. In selecting the appropriate luminaire supports for high-mast lighting, the designer should consider the following.

   a. Critical Area. A pole should be located so that the highest localized level of illumination occurs within a critical-traffic area (e.g., freeway/ramp junction, ramp terminal, merge point).

   b. Roadside Safety. A pole should be located a sufficient distance from the roadway so that the probability of a collision is virtually eliminated. It should not be placed at the end of a long tangent.

   c. Sign. A pole should be located so that it is not within a motorist's direct line of sight to a highway sign.

4. Design. The methodologies for checking the adequacy of uniformity are the point-by-point method and the template method. The point-by-point method checks illumination by using the manufacturer's Isolux diagram. The total illumination at a point is determined by the sum of the contributions of illumination from all mast assemblies within the effective range of the point. Due to the numerous calculations, a computer should be used to make these determinations. The template methodology uses Isolux templates to determine the appropriate location for each pole. The templates may be moved to ensure that the minimum-maintained illumination is provided and uniformity ratio has been satisfied. Section 78-8.0 provides an example of using the template methodology.

78-8.0 EXAMPLE COMPUTATIONS

The following examples are provided to illustrate how to manually design a lighting system using the illuminance methodology. Example 78-8.1 illustrates a design using conventional light standards. Example 78-8.2 illustrates the template methodology for high-mast lighting. Although these examples use the manual-calculation procedures, a computer should be used to design the system.

* * * * * * * * * *

Example 78-8.1

Given: Urban collector through a commercially-developed area.

Problem: Design a lighting system.

Solution: Using the steps provided in Section 78-5.02 and the design considerations in Section 78-6.0, the design should proceed as follows.

1. Assemble Information. Plan and profile sheets should be provided by the road designer. A field review is held with local officials on-site. From the plans the following information is determined.

   Roadway Width: 18 m, consisting of four 3.6-m lanes with a 3.6-m two-way left-turn lane in the median. See Figure 78-8A, Urban Collector Highway (Example 78-8.1).

   Design Speed: 70 km/h

   Surface Type: HMA pavement with 150-mm-height concrete curbs on both sides

   Pedestrians: No pedestrians are expected near the roadway

   Terrain: Flat

2. Determine Classification. Using the data collected in Step 1 and Section 78-6.01, the roadway classification is a collector/city street.

3. Select Design Criteria. From Figure 78-6B, Illuminance Design Criteria, the lighting design should satisfy the criteria as follows:

   Average Illuminance, E_h = 9 lx
   Uniformity Ratio = 4:1

4. Select Equipment. The equipment is selected as follows:

   Light Source = 400-W HPS (Figure 78-6A, Lighting-Design Parameters)
   Mounting Height, *MH* = 12 m (Figure 78-6A)
   Mast-Arm Length = 3.0 m
   Luminaire Distribution: Medium, Type II, Semi-Cutoff glare control (M-S-II)
   Effective Mounting Height = 12 m
   Initial Lamp Lumens, *LL* = 50,000 lm (Figure 78-5A, Lamp Data)
   Coefficient of Utilization, *CU* = 0.48 (Manufacturer's Data, Figure 78-8B, Coefficient-of-Utilization Curve, M-S-II Luminaire)

Lamp Lumen Depreciation Factor, *LLD* = 0.90, from Section 78-6.03(04)
Luminaire Dirt Depreciation Factor, *LDD* = 0.87, from Section 78-6.03(04)

5. Select Layout. The roadway-width to mounting-height ratio is 18/12 = 1.5. From Figure 78-6E, Guide for Luminaire Lateral Light Type and Placement, use Type II with a staggered arrangement. Due to right-of-way restrictions, the poles can only be placed 3.0 m behind the curb.

6. Determine Luminaire Spacing. Using Equation 78-5.1, the luminaire spacing can be determined as follows:

$$S = \frac{(LL)(CU)(LLD)(LDD)}{WE_h}$$

$$S = \frac{(50{,}000)(0.48)(0.90)(0.87)}{(18)(9)}$$

S = 116 m

7. Check Uniformity. Using Equation 78-5.2, the manufacturer's Isolux diagram, from Figure 78-8C, Sample Isolux Diagram (Example 78-8.1), and Figure 78-6 I, Lighting System Configurations, the following steps are used to check the lighting uniformity.

   a. Setup. The roadway geometrics are superimposed on the isolux diagram. With the 3.0-m mast arm length, the luminaire is directly over the curb line. The curb line can be placed on the line directly below the luminaire (the 0 line). The lateral width of the roadway is 18 m and the mounting height is 12 m, the lateral (or transverse) ratio is 18/12 = 1.5. This is marked opposite the curb line on the Isolux diagram.

   b. Determine Checkpoints. From Figure 78-8A, determine the necessary checkpoints (S = 116 m).

   c. Determine Contributing Luminaries. For a staggered arrangement, the lighting levels need only be checked for the selected luminaire and the luminaires directly opposite the luminaire on both sides. Lighting levels from other luminaires will have a minimal effect and, therefore, are not considered.

   d. Determine Transverse and Longitudinal Ratios. The ratios for each of the three luminaires are shown in Figure 78-8D, Unadjusted Illumination Value (Example 78-8.1). These ratios are determined by measuring the distance and dividing it by the mounting height.

e. Determine Illumination Level. Using the ratios determined in Step 7d and the Isolux diagram in Figure 78-8C, the illumination level is determined and shown in Figure 78-8D. From Figure 78-8D, the critical location is found to be at Point B (0.03 lx).

f. Adjust Minimum Level. The value shown in Figure 78-8D is based on 1000 initial lamp lumens, 9-m mounting height, and clean lamps. Therefore, Point B must be adjusted as follows:

LL	=	50 (50,000 Initial Lamp Lumens, Step 4)
MH	=	0.58 (Figure 78-8C)
LLD	=	0.90 (Step 4)
LDD	=	0.87 (Step 4)
E_h	=	(0.03)(50)(0.58)(0.90)(0.87) = 0.68 lx

g. Determine Uniformity Ratio. Using Equation 78-5.2, the uniformity ratio is determined as follows:

$$\text{Uniformity Ratio} = \frac{9}{0.68} = 13:1$$

This ratio is greater than the 4:1 maximum determined in Step 3; therefore, this design arrangement would not be acceptable.

8. Optimize Design. From Step 7, it can be seen that the design would not satisfy the light-illumination criteria. However, if this design did satisfy these criteria it might not be the most cost-effective design. Two or three runs assuming different mounting heights, spacing, wattages, etc., should be performed to determine the most efficient design. The system with the highest mounting height and longest spacing will provide the most cost-effective design.

* * * * * * * *

Example 78-8.2

Given: Urban cloverleaf interchange (see Figure 78-8E, Urban Interchange Lighting).

Problem: Design a lighting system using high-mast lighting and the template methodology.

Solution: Using the steps described in Section 78-5.02 and the design considerations in Sections 78-6.0 and 78-7.0, the design should proceed as follows.

1. Assemble Information. Plan and profile sheets should be provided by the road designer. A field review is held on-site. The following information gained from the plans.

   Area: 900,000 m^2 (see Figure 78-8E)
   Design Speed: 110 km/h
   Surface Type: Concrete pavement with concrete shoulders
   Terrain: Flat
   Clear Zone: 9.0 m (see Figure 49-2A)

2. Determine Classification. Using the data collected in Step 1 and Section 78-6.01, the roadway classification is freeway.

3. Select Design Criteria. From Figure 78-6B, Illuminance Design Criteria, the lighting design should satisfy the criteria as follows.

   Average Illuminance, E_h = 8 lx
   Uniformity Ratio = 4:1

4. Select Equipment. The equipment is selected as follows:

   Light Source = 1000-W HPS (Section 78-7.0)
   Mounting Height (*MH*) = 30 m (assumed)
   Luminaire Distribution = Short, Type V, Cutoff glare control (S-C-V)
   Effective Mounting Height = 30 m
   Initial Lamp Lumens, *LL* = 140,000
   Lamp Lumen Depreciation Factor, *LLD* = 0.90 (Section 78-6.03(04))
   Luminaire Dirt Depreciation Factor, *LDD* = 0.87 (Section 78-6.03(04))

5. Design Template. A template is required which shows the minimum-initial illumination required from one luminaire with a perimeter of one-half that value. The following steps are used.

   a. Determine the Minimum-Maintained Illumination, *MMI*:

$$MMI = \frac{Average\ Maintained\ Illumination}{Average\text{-}to\text{-}Minimum\ Ratio} = \frac{8\ \ lx}{4:1} = 2\ \ lx$$

   b. Determine the Minimum-Initial Illumination, *MII*:

$$MII = \frac{MMI}{(LLD)(LDD)} = \frac{2}{(0.90)(0.87)} = 2.55 \ \ lx$$

c. Determine the *MII* from one luminaire. Assume 4 luminaires per pole.

$$MII \ / \ Luminaire = \frac{MMI}{No. Luminaires \ / \ pole} = \frac{2.55 \ \ lx}{4} = 0.64 \ \ lx$$

d. At least two poles will contribute to the minimum illumination.

$$1/2 \ MII \ / \ Luminaire = (1/2)(0.64) = 0.32 \ \ lx$$

e. From the Isolux diagram for a 1000-W HPS luminaire (see Figure 78-8F), the *MII* per luminaire and 2 *MII* per luminaire distances are determined.

If the mounting height selected for the installation differs from that on the photometric test report, the proper correction factor has to be applied. Also, if the value on the test report is per 1000 lamp lumens, a factor for actual initial lamp lumens has to be included in the computations.

f. Using the longitudinal- or transverse-distance-to-mounting-height ratio of the Isolux diagram as a scale, make a template to fit the scale of the plans used for the lighting layout. Use 2 *MII* / luminaire as the perimeter of the template and show *MMI* / luminaire as a broken line on the template.

6. Determine Pole Locations. Start by placing the poles at the critical points. For an interchange, this is the gore area. The poles should be placed at least 25 m from the edge of the mainline travel lane. The minimum clear-zone width will be acceptable, as shown in Figure 78-8G, Interchange Lighting Layout (Example 78-8.2).

7. Determine the Coefficient of Utilization. Using the 2 *MII* / luminaire line in Figure 78-8F, the coefficient of utilization can be determined (*CU* = 0.25). For Type V light distribution, the value for the street and private-property side is the same. Because the street and private-property sides are fully utilized, the *CU* value can be doubled (*CU* = 0.50).

8. Determine Average-Maintained Illumination, *AMI*.

$$AMI = \frac{(No. Poles)(LL)(CU)(LLD)(LDD)(3.2796)}{Total \ Area}$$

From Step 6, 9 poles were used; therefore:

$$AMI = \frac{(9)(140{,}000)(0.50)(0.90)(0.87)(3.2796)}{900{,}000\ m^2} = 1.80\ \ lx$$

9. Check *MMI*. The designer must check the layout to ensure that the minimum requirements are satisfied. This will involve checking the points where the lowest illumination levels appear to be. The actual values are determined using Figures 78-8F and 78-8G. Figure 78-8H, Unadjusted Illumination Value (Example 78-8.2), provides the illumination calculations for the selected points. The critical location is found to be at Point B (0.68 lx). This value must be adjusted by the light loss factors as follows:

   MMI = (0.68)(0.90)(0.87) = 0.53 lx

10. Determine Uniformity Ratio. Using Equation 78-5.2, the uniformity ratio is determined as follows:

$$Uniformity\ Ratio = \frac{1.80}{0.53} = 3.40 : 1$$

   This ratio is less than the 4:1 maximum determined in Step 3; therefore, this design arrangement would be acceptable.

11. Final Check. Because 4 luminaires per pole were assumed, the average-maintained illumination would be as follows:

   (4)(1.80) = 7.20 lx

* * * * * * * * * *

Interchange Type	Night Volume of Ramp [1] (Avg. / Ramp / Night) [2]
Diamond	750
Cloverleaf	375
Directional / Semi Directional	375

Notes:

1. *For a volume lower than that listed, the interchange should only have partial lighting. Partial lighting may also be used at an interchange with a volume higher than that shown in the table.*

2. *For design purposes, night consists of the time between 7:00 p.m. and 7:00 a.m.*

MINIMUM TRAFFIC VOLUME FOR COMPLETE INTERCHANGE LIGHTING

Figure 78-2A

HIGHWAY-LIGHTING ACCIDENT-WARRANT ANALYSIS WORKSHEET

Route: Location:

Municipality: County:

Analysis Made By: Date:

1. Determination of Need for an Accident Analysis

This analysis section must be completed for each individual intersection, interchange, or continuous section of roadway of 1.5 km (1 mi) or less excluding intersections or interchanges. Intersections, interchanges, or continuous sections of roadway should not be combined for a single analysis for all.

a.	Accident Study Year:					TOTAL
b.	Number of months studied in each year:	+	+		=	
c.	Number of Nighttime Accidents:	+	+		=	
d.	Number of Daytime Accidents:	+	+		=	
e.	Total Number of Accidents: (Lines 1c + 1d.)	+	+		=	
f.	Night to Day Ratio: (Line 1c divided by 1d.)	+	+		=	
g.	Number of Years Studied: (Line 1b Total divided by 12.)	+	/	12	=	
h.	Average Number of Nighttime Accidents Per Year: (Line 1c Total divided by Line 1g.)		/		=	
i.	Average Number of Daytime Accidents Per Year: (Line 1d Total divided by Line 1g.)		/		=	
j.	Average Night to Day Ratio: (Line 1h divided by Line 1i.)		/		=	

2. Type of light standards to be used:

☐ Conventional Unit Only
☐ Combination Tower and Conventional Units

3. Type of Lighting System: (Check One)

☐ Intersection
☐ Partial Interchange
☐ Full Interchange

4. Installation Costs: (Use Appendix A)

a. Construction Cost: $

b. Mobilization-Demobilization and Maintenance of Traffic Costs:
(Line 4a) $ x 0.07 = $

c. Design and Construction Administration Costs:
(Line 4a) $ x 0.10 = $

d. Total Installation Costs:
(Line 4a + 4b + 4c) $

5. Annual Operating and Maintenance Cost: (Use Appendix B)

a. Operation and Maintenance Costs: $

b. Administration Costs:
(Line 5a) $ x 0.10 = $

c. Operating and Maintenance Cost Per Year:
(Line 5a + 5b) $

d. Total Operating and Maintenance Cost = Present worth of costs over the 20-year service life.

= Yearly Cost (Line 5c) x Present Worth Factor

= $ x 13.5903 = $

e. Total Cost = Total Installation Cost + Total Operating and Maintenance Cost

= (Line 4d) $ + (Line 5d) $ = $

6. Annual Safety Benefits: (Use Appendix C)

						TOTAL
a.	Accident Study Year (Same as Section 1)					
b.	Number of Months Studied in Each Year (Same as Section 1)	+	+		=	
c.	Number of Vehicles Involved, Nighttime Only	+	+		=	
d.	Number of Injuries, Nighttime Only	+	+		=	
e.	Number of Deaths, Nighttime Only	+	+		=	
f.	Number of Years Studied: (Line 6b Total divided by 12.)		/	12	=	
g.	Average Number of Nighttime Vehicles Involved Per Year: (Line 6c Total divided by Line 6f.)		/		=	
h.	Average Number of Nighttime Injuries Per Year: (Line 6d Total divided by Line 6f.)		/		=	
i.	Average Number of Nighttime Deaths Per Year: (Line 6e divided by Line 6f.)		/		=	

j. Accident Reduction Factor (from Appendix D): = _____

k. Reduction in Accident Costs Per Average Year due to Highway Lighting Being Installed:

Type of Damage: (No./Yr.)		Unit Cost (Appendix C)		Reduction Factor		Savings Per Year
Vehicles (Line 6g)	x	$	x		=	$
Injuries (Line 6h)	x	$	x		=	$
Deaths (Line 6i)	x	$	x		=	$
Total Yearly Benefit: (sum of all three lines)						$

l. Assumptions:

Service Life	=	20 Years
Interest Rate	=	4%
Inflation Rate	=	0%
Net Salvage Value	=	$0

m. Traffic Growth Factor = (from Appendix E)

n. Total Benefits:

B = Present worth of the benefits over the 20-year service life
= Total Yearly Benefit (Line 6k) x Present Worth Factor x Traffic Growth Factor (Line 6m)

= $ x 13.5903 x

= $

7. <u>Benefit / Cost Ratio, B/C</u>:

B/C = (Line 6n divided by Line 5e)
= $ / $

APPENDIX A
INSTALLATION COSTS (1994 Figures)

Fully-Lighted Interchange

1.	Diamond:	Conventional	$324,000
		Tower and Conventional	280,000
2.	Cloverleaf:	Conventional	$416,000
		Tower and Conventional	350,000
3.	Partial Cloverleaf:	Conventional	$208,000
		Tower and Conventional	175,000

Partially-Lighted Interchange (Conventional Devices Only)

1.	Diamond:	$50,000
2.	Cloverleaf:	104,000
3.	Partial Cloverleaf:	50,000

Continuous and Intersection Lighting

1.	Continuous, per kilometer	4 Lanes	$95,000
		2 Lanes	47,000
	Continuous, per mile	4 Lanes	$153,000
		2 Lanes	76,000
2.	4-Way Intersection	4 Lanes	$40,000
		2 Lanes	25,000
3.	T-Intersection		$20,000

APPENDICES FOR HIGHWAY LIGHTING
ACCIDENT WARRANT ANALYSIS WORKSHEET

Figure 78-2C

APPENDIX B
ANNUAL OPERATION AND MAINTENANCE COSTS (1994 Figures)

Fully-Lighted Interchange

1.	Diamond:	Conventional	$25,700
		Tower and Conventional	19,300
2.	Directional:	Conventional	$52,700
		Tower and Conventional	37,800
3.	Cloverleaf:	Conventional	$51,200
		Tower and Conventional	37,400
4.	Partial Cloverleaf:	Conventional	$31,300
		Tower and Conventional	19,500

Partially-Lighted Interchange

1.	Diamond:	$12,100
2.	Directional:	30,800
3.	Cloverleaf:	35,300
4.	Partial Cloverleaf:	8,800

Continuous and Intersection Lighting

			Per Kilometer	Per Mile
1.	Continuous	4 Lanes	$12,700	$20,400
		2 Lanes	5,800	9,300
2.	4-Way Intersection	4 Lanes / 4 Lanes	$5,600	
		4 Lanes / 2 Lanes	4,200	

APPENDICES FOR HIGHWAY LIGHTING
ACCIDENT WARRANT ANALYSIS WORKSHEET

Figure 78-2C (Cont'd.)

3.	T-Intersection	4 Lanes / 4 Lanes	$3,300
		4 Lanes / 2 Lanes	2,700
		2 Lanes / 2 Lanes	2,300

APPENDIX C
COST OF MOTOR VEHICLE ACCIDENTS (1994 Figures)

Cost per Vehicle Involved: $1,400

Cost per Injured Person: $11,000

Cost Per Each Death $450,000

APPENDIX D
ACCIDENT REDUCTION FACTORS

Improvement	Factor
Install New Lighting at Intersection / Interchange	0.37
Modernize Lighting at Intersection / Interchange	0.25
Install New Lighting at Bridge	0.59
Install New Lighting at Underpass	0.10

APPENDIX E
TRAFFIC GROWTH FACTORS

Determination of factor assumes 4% interest rate and 20-year service life.
Unless otherwise specified, assume a traffic growth rate of 2%.

Traffic Growth Rate	Traffic Growth Factor
1%	1.075
2%	1.150
3%	1.225
4%	1.300
5%	1.375

APPENDICES FOR HIGHWAY LIGHTING
ACCIDENT WARRANT ANALYSIS WORKSHEET

Figure 78-2C (Cont'd.)

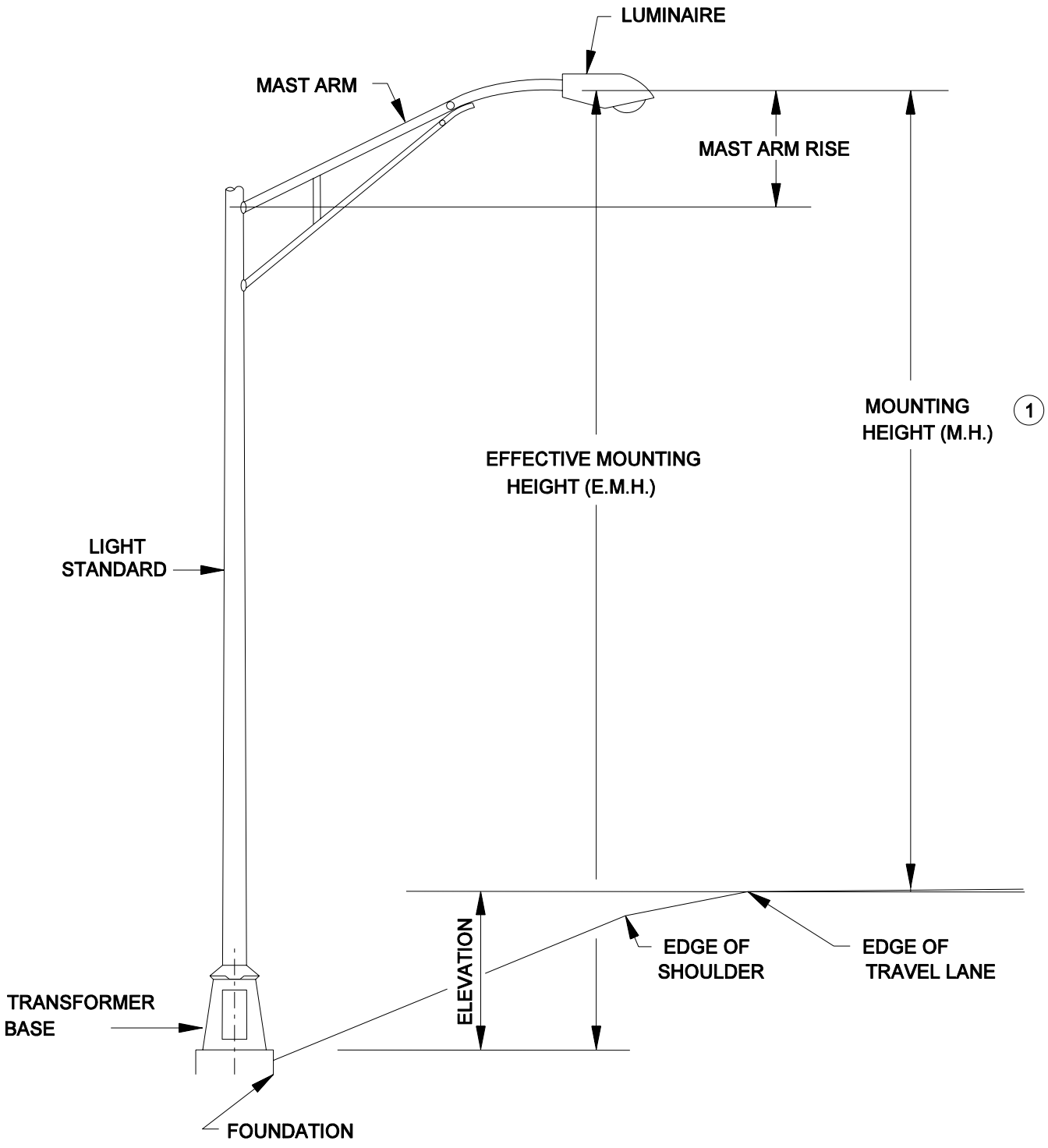

1 INDOT TYPICALLY USES MOUNTING HEIGHTS OF 12 m.

TYPICAL LUMINAIRE

Figure 78-3A

Mast-Arm Length (m)	Maximum Rise (m)
2.7 or Less	1.2
3.0 to 4.3	1.5
4.5 to 5.8	1.7
6.1 to 7.6	1.8
7.9 to 9.1	2.4

MAST-ARM RISE VERSUS LENGTH

Figure 78-3B

Lamp Wattage [a]	Approx. Ballast Wattage [b]	Total Wattage	Initial Lumens	Mean Lumens	Average Life (h)
MERCURY VAPOR					
100	35	135	4000	3400	> 24 000
100 DX	35	135	4400	3600	> 24 000
175	35	205	8000	7400	> 24 000
175 DX	35	205	8600	7600	> 24 000
250 [c]	35	285	11 800	10 600	> 24 000
250 DX	35	285	12 800	10 800	> 24 000
400	55	455	21 000	19 100	> 24 000
400 DX	55	455	23 100	19 800	> 24 000
700	65	765	40 500	36 200	> 24 000
700 DX	65	765	42 800	36 000	> 24 000
1000	90	1090	56 200	48 400	> 24 000
1000 DX	90	1090	63 000	48 400	> 24 000
HIGH-PRESSURE SODIUM					
50	18	68	3700	3300	24 000
70	20	90	5800	5200	24 000
100 [d]	35	135	9500	8500	24 000
150	45	195	16 000	14 400	24 000
200	50	250	22 000	19 800	24 000
250 [e]	60	310	27 500	24 700	24 000
250 S	60	310	30 000	27 000	24 000
310	70	380	37 000	33 300	24 000
400 [e]	85	485	50 000	45 000	24 000
1000 [f]	100	1100	140 000	126 000	28 500
LOW-PRESSURE SODIUM					
18	14	32	1800	1700	10 000
35	25	60	4800	4600	18 000
55	30	85	8000	7600	18 000
90	35	125	13 500	12 800	18 000
135	40	175	22 500	21 400	18 000
180	50	230	33 000	31 400	18 000

Notes:

a *The common wattages are shown. For others refer to the IES* Lighting Handbook.
b *Shown as the highest loss found for the commonly-used ballast types.*
c *Used for sign illumination.*
d *Used for a highway underpass.*
e *Used for conventional highway lighting.*
f *Used for high-mast lighting.*

LAMP DATA

Figure 78-5A

Lamp Lumen Depreciation Factor, *LLD*	0.90
Luminaire Dirt Depreciation Factor, *LDD*	0.87
Percent of Voltage Drop Permitted	10%
Pole Height	12 m
Lamp Size	150 W, HPS (Underpass) 250 W or 400 W, HPS (Conventional) 1000 W, HPS (High-Mast)

LIGHTING-DESIGN PARAMETERS

Figure 78-6A

Roadway Classification	Average Maintained Horizontal Illuminance, E_h (lx)	Uniformity Ratio
Interstate Route or Other Freeway	8	4:1
Expressway	12	3:1
Intersection or City Street	9	4:1
Weigh Station or Rest Area Ramp	6	3:1
Weigh Station or Rest Area Parking Area	11	4:1

ILLUMINANCE DESIGN CRITERIA

Figure 78-6B

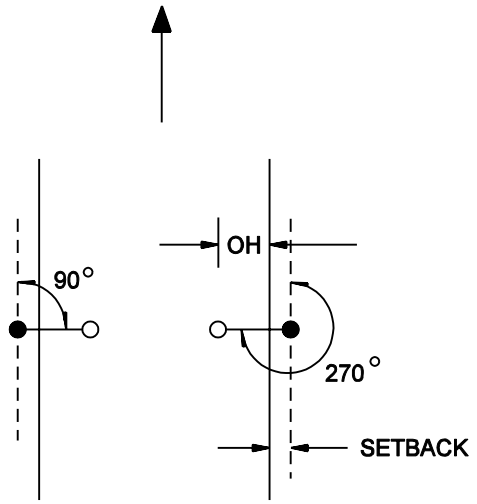

ORIENTATION ANGLE
OVERHANG (OH)
(PLAN VIEW)

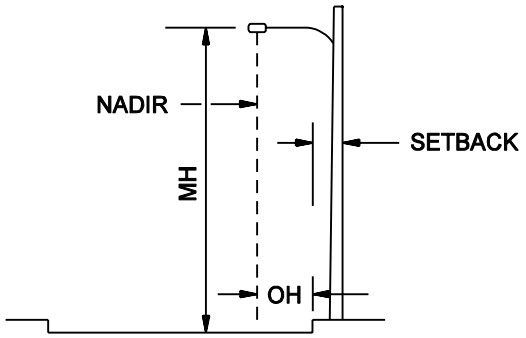

MOUNTING HEIGHT (MH)
(PROFILE VIEW)

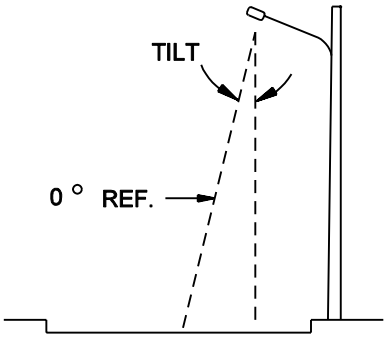

TILT ANGLE

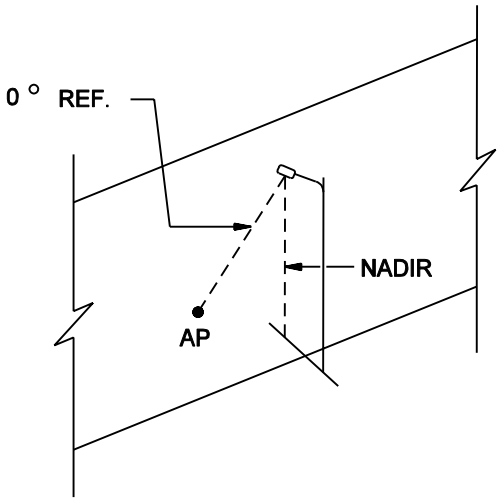

AIMING POINT (AP)

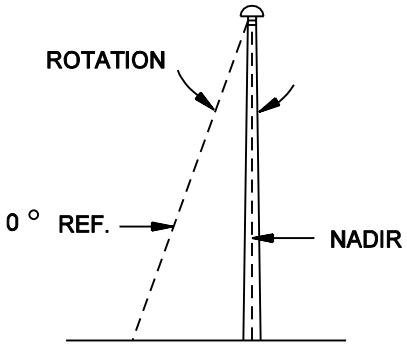

ROTATION ANGLE

LUMINAIRE GEOMETRY

Figure 78-6C

Spacing Classification	Definition	Spacing Distance
S	Short	4 times *MH* or less
M	Medium	5 times *MH* or less
L	Long	More than 5 times *MH*
Width Classification	Pavement Mounting Location	Roadway Width Served
Type I	Center	2 times *MH* or less
Type II	Edge	*MH* or less for one-side mounting 2 times *MH* or less for both-sides mounting
Type III	Edge	1.5 times *MH* or less for one-side mounting 3 times *MH* or less for both-sides mounting
Type IV	Edge	2 times *MH* or less for one-side mounting 4 times *MH* or less for both-sides mounting
Type V	Center	4 times *MH* or less
Glare-Control Classification	Definition	Control Requirement
C	Cutoff	Strict control of lighting above 80 deg vertical
S	Semi-Cutoff	Medium control of lighting above 80 deg vertical
N	Non-Cutoff	No control of lighting above 80 deg vertical

Notes:

1. MH = *mounting height.*

2. *The complete luminaire classification consists of the spacing, width type, and glare control, in sequence. Example: M-III-S.*

3. *There is no assurance that these values will be achieved by a luminaire which satisfies the classification requirements and is used as shown above.*

4. *INDOT does not use all of the IES classifications listed above. The designer should review Section 78-6.03(01) or contact the Office of Traffic Engineering to determine the luminaire classifications used by INDOT.*

LUMINAIRE CLASSIFICATION SYSTEM

Figure 78-6D

Arrangement	One Side or Staggered	Staggered or Opposite	Twin Mast Arms (Median Mounting)	At-Grade Intersection or High-Mast
Lateral Placement	Pavement Width to 1.5 MH	1.5 MH plus Pavement Width	Pavement Width to 1.5 MH, Each Pavement	Pavement Width to 2.0 MH
Light Type	II, III, or IV	III or IV	II or III	IV or V

LUMINAIRE LATERAL PLACEMENT AND LIGHT TYPE

Figure 78-6E

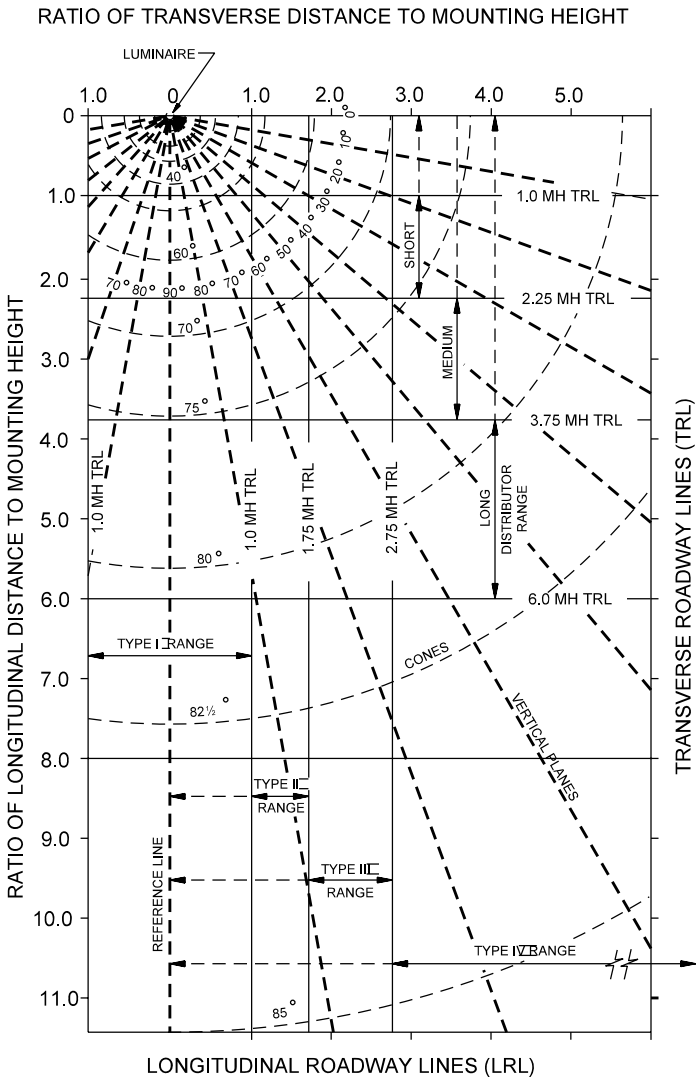

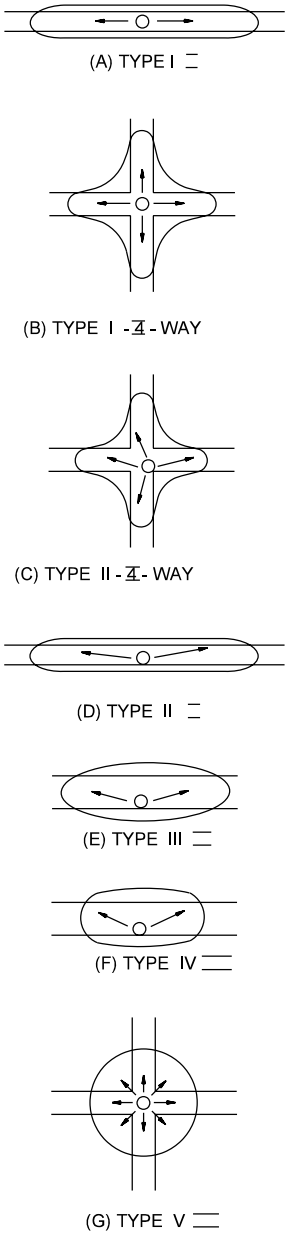

PLAN VIEW FOR LUMINAIRE COVERAGES

Figure 78-6F

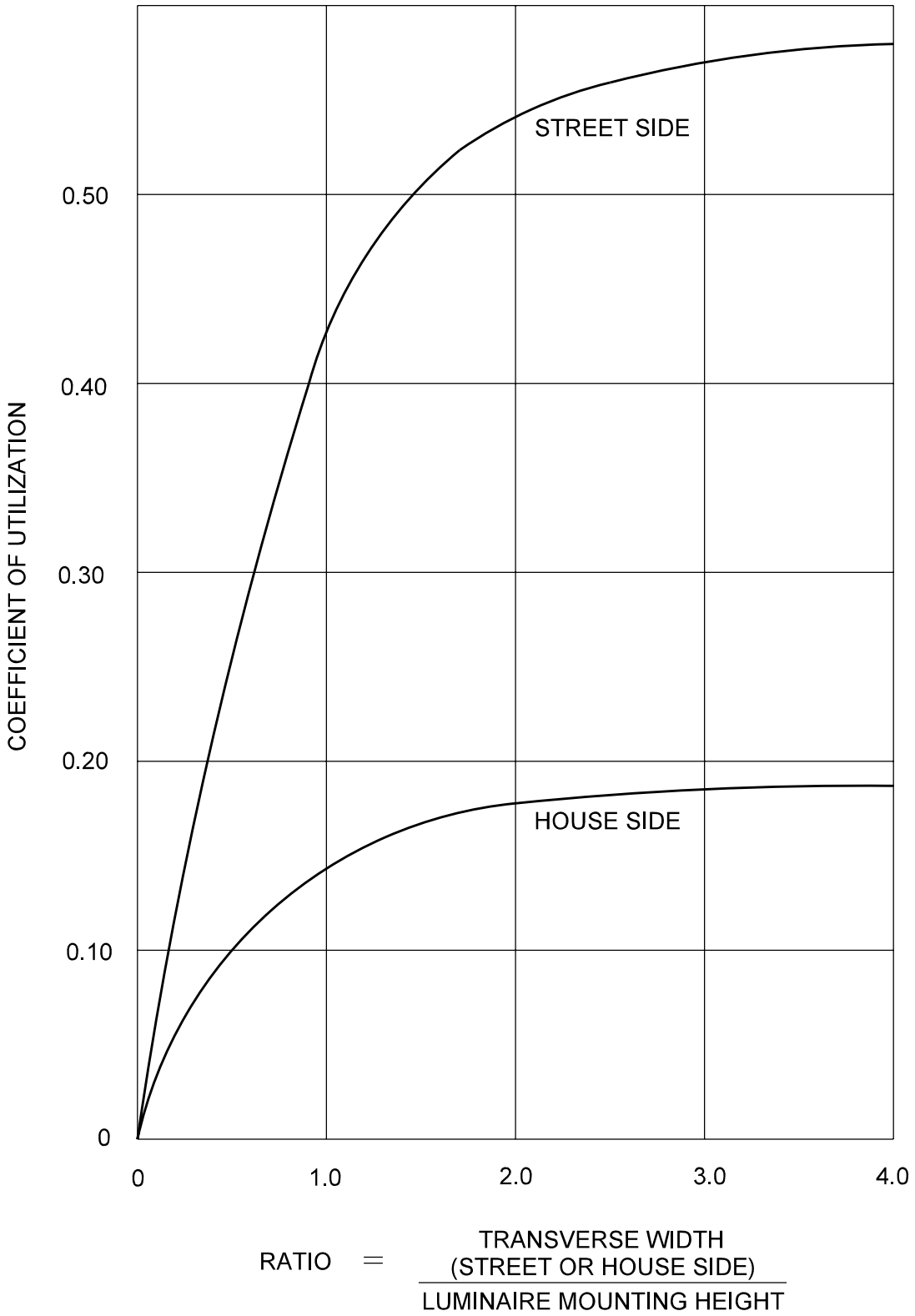

Note: The coefficient-of-utilization curve will vary with various manufacturers and equipment types.

SAMPLE COEFFICIENT-OF-UTILIZATION CURVE

Figure 78-6G

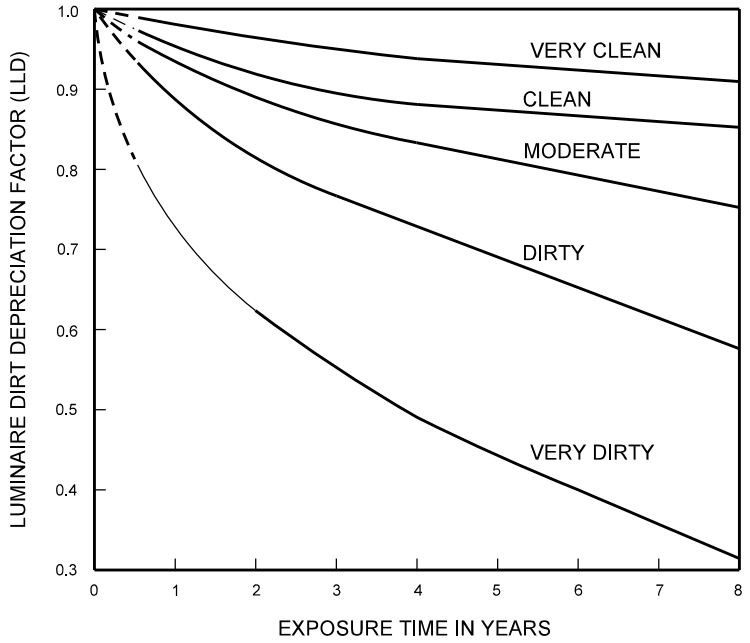

Notes:

1. *VERY CLEAN - No nearby smoke or dust-generating activities and a low ambient contaminant level. Light traffic. Generally limited to residential or rural areas. The ambient particulate level is no more than 150 micrograms per cubic meter.*
2. *CLEAN - No nearby smoke or dust-generating activities. Moderate to heavy traffic. The ambient particulate level is no more than 300 micrograms per cubic meter.*
3. *MODERATE - Moderate smoke or dust-generating activities nearby. The ambient particulate level is not more than 600 micrograms per cubic meter.*
4. *DIRTY - Smoke or dust plumes generated by nearby activities may occasionally envelope the luminaries.*
5. *VERY DIRTY - As above, but the luminaries are commonly enveloped by smoke or dust plumes.*

ROADWAY LUMINAIRE DIRT DEPRECIATION FACTORS

Figure 78-6H

TYPICAL MOUNTING CONFIGURATIONS
(LUMINANCE PATTERNS REPEAT AT SPACING BOUNDARIES INDICATED)

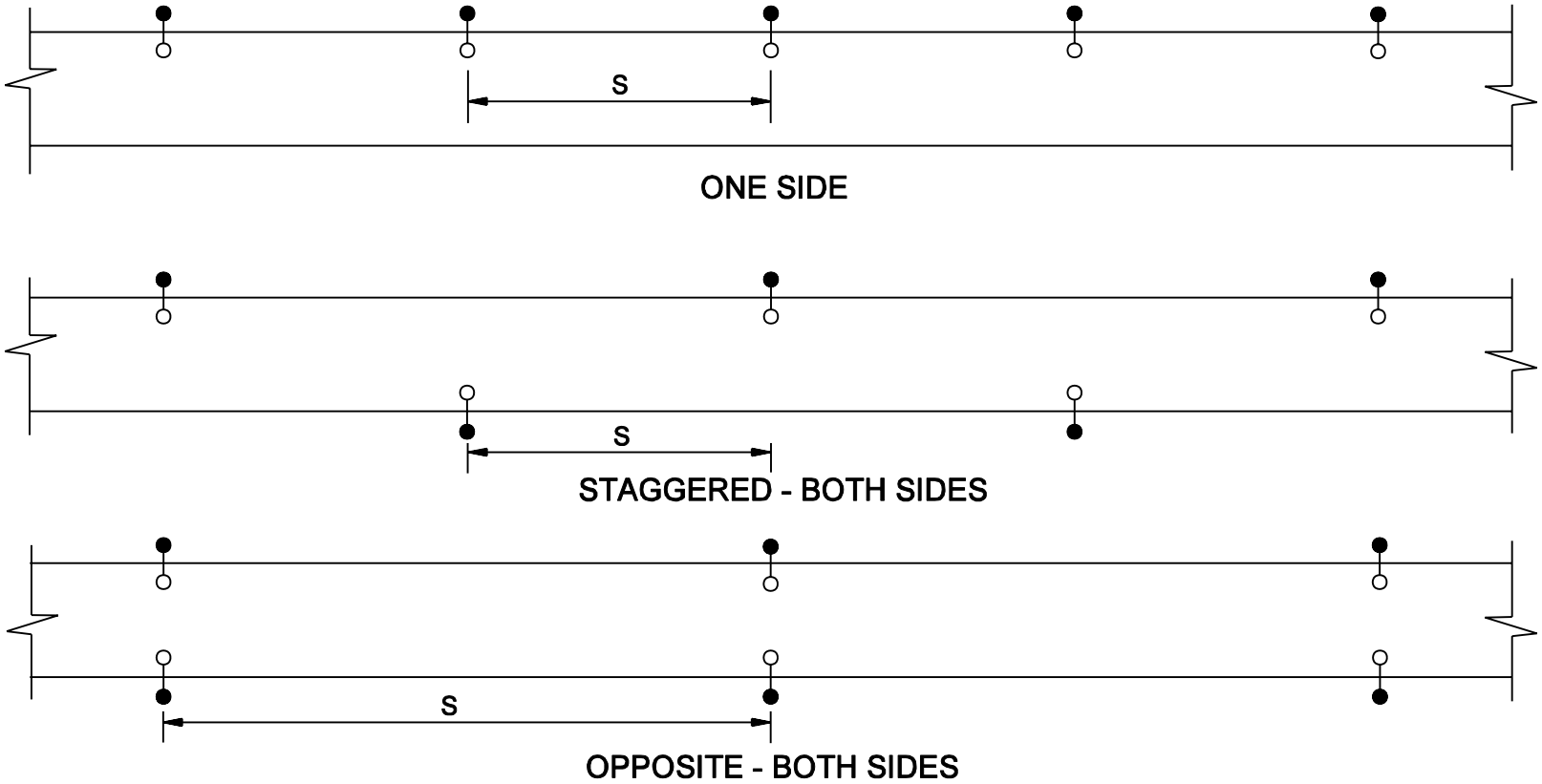

KEY:

● = LIGHT STANDARD
○ = LUMINAIRE
S = SPACING

LIGHTING SYSTEM CONFIGURATIONS

Figure 78-6l

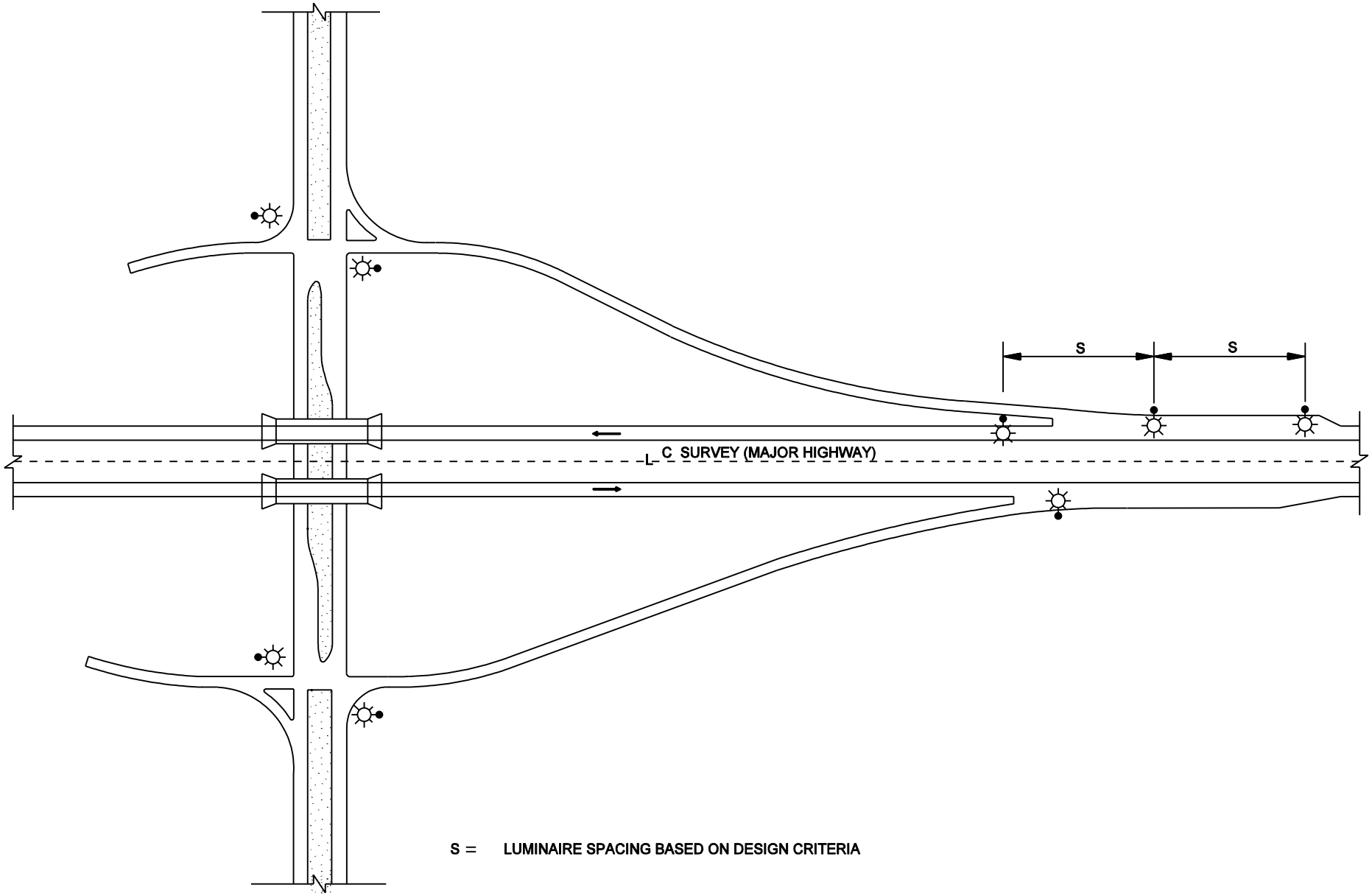

PARTIAL INTERCHANGE LIGHTING

Figure 78-6J

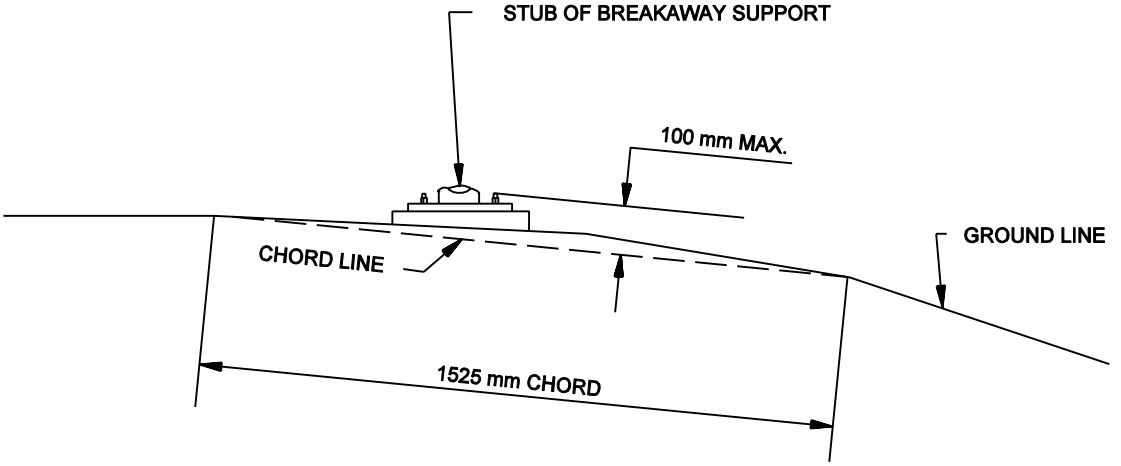

BREAKAWAY SUPPORT STUB CLEARANCE DIAGRAM

Figure 78-6K

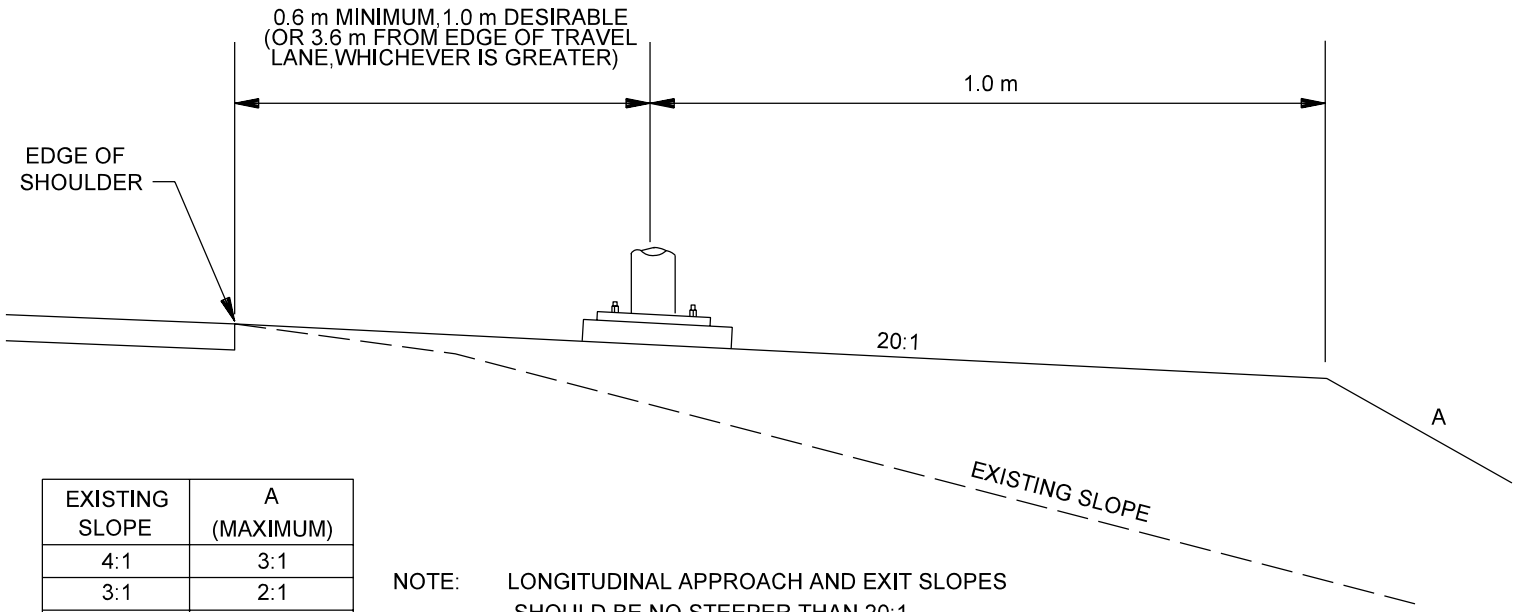

EXISTING SLOPE	A (MAXIMUM)
4:1	3:1
3:1	2:1
2:1	1.5:1

NOTE: LONGITUDINAL APPROACH AND EXIT SLOPES SHOULD BE NO STEEPER THAN 20:1

LIGHT STANDARD TREATMENT
(Fill Slope 4:1 or Steeper)

Figure 78-6L

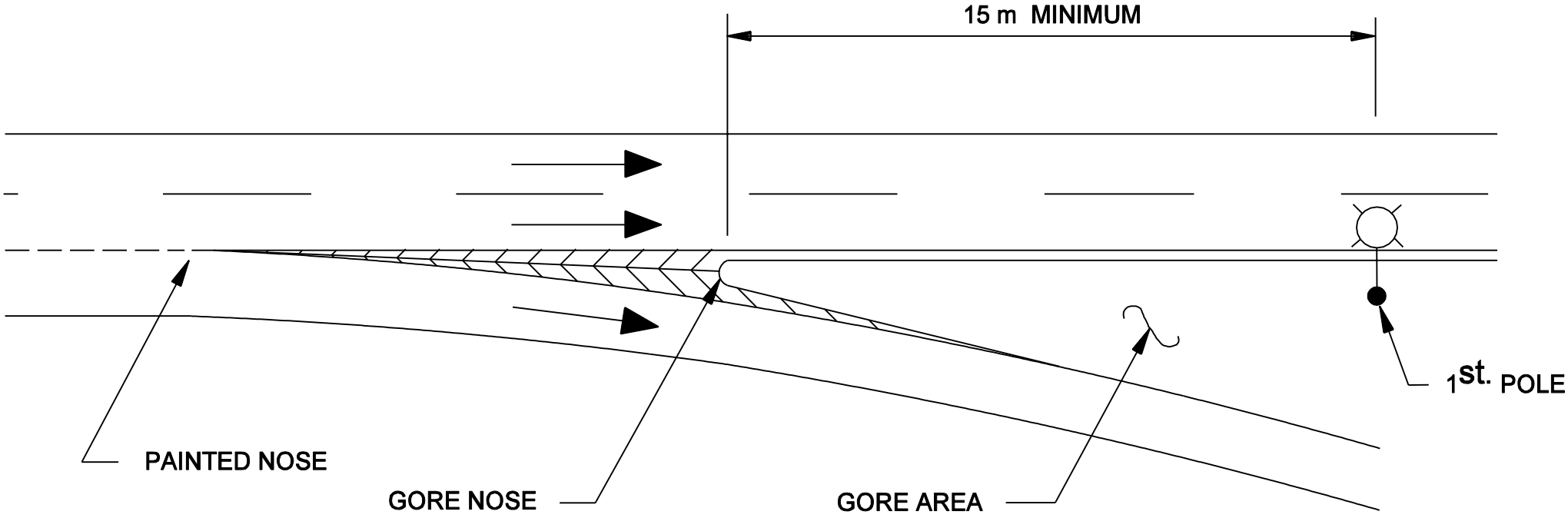

POLE CLEARANCES FOR RAMP GORES

Figure 78-6M

LAMP WATTAGE, TYPE	LINE VOLTAGE		
	120	240	480
250 W, MV	2.7	1.4	0.7
400 W, MV	4.2	2.1	1.1
150 W, HPS	1.7	0.9	0.5
250 W, HPS	2.9	1.4	0.7
400 W, HPS	3.9	2.0	1.0
1000 W, HPS	9.0	5.0	2.5

DESIGN AMPERAGE FOR LAMP WATTAGE

Figure 78-6N

WIRE SIZE (AWG)	RESISTANCE (Ω/km)
10	4.07
4	1.01

COPPER-WIRE RESISTANCE

Figure 78-6 O

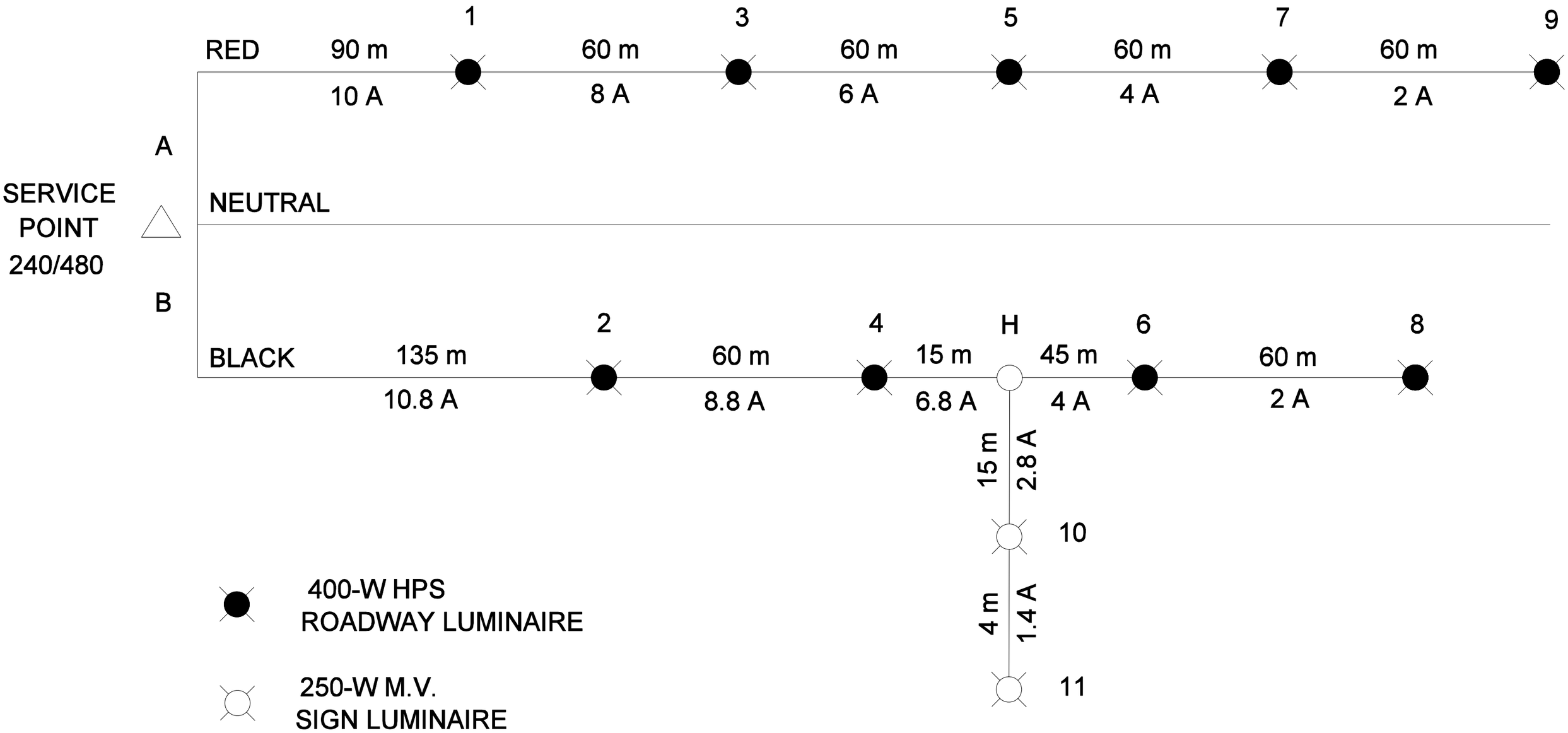

VOLTAGE DROP CALCULATIONS
(Example 78-6.1)

Figure 78-6P

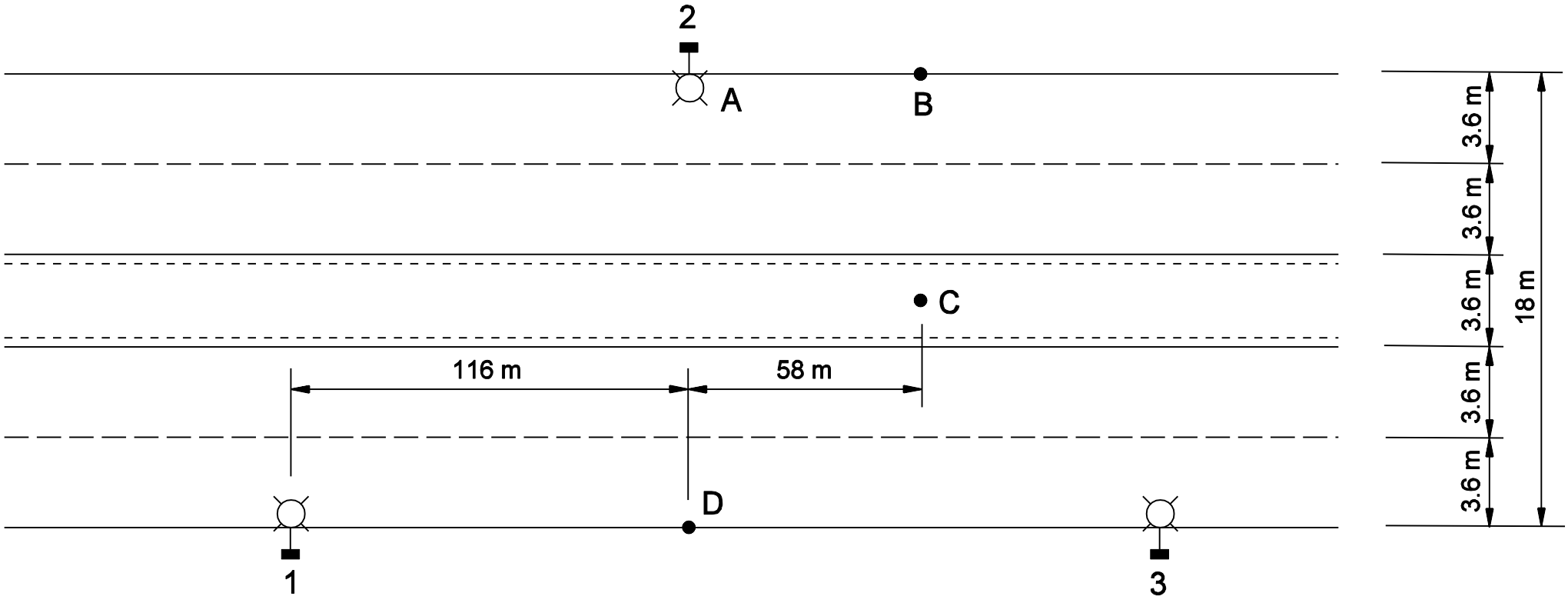

URBAN COLLECTOR LIGHTING
(Example 78-8.1)

Figure 78-8A

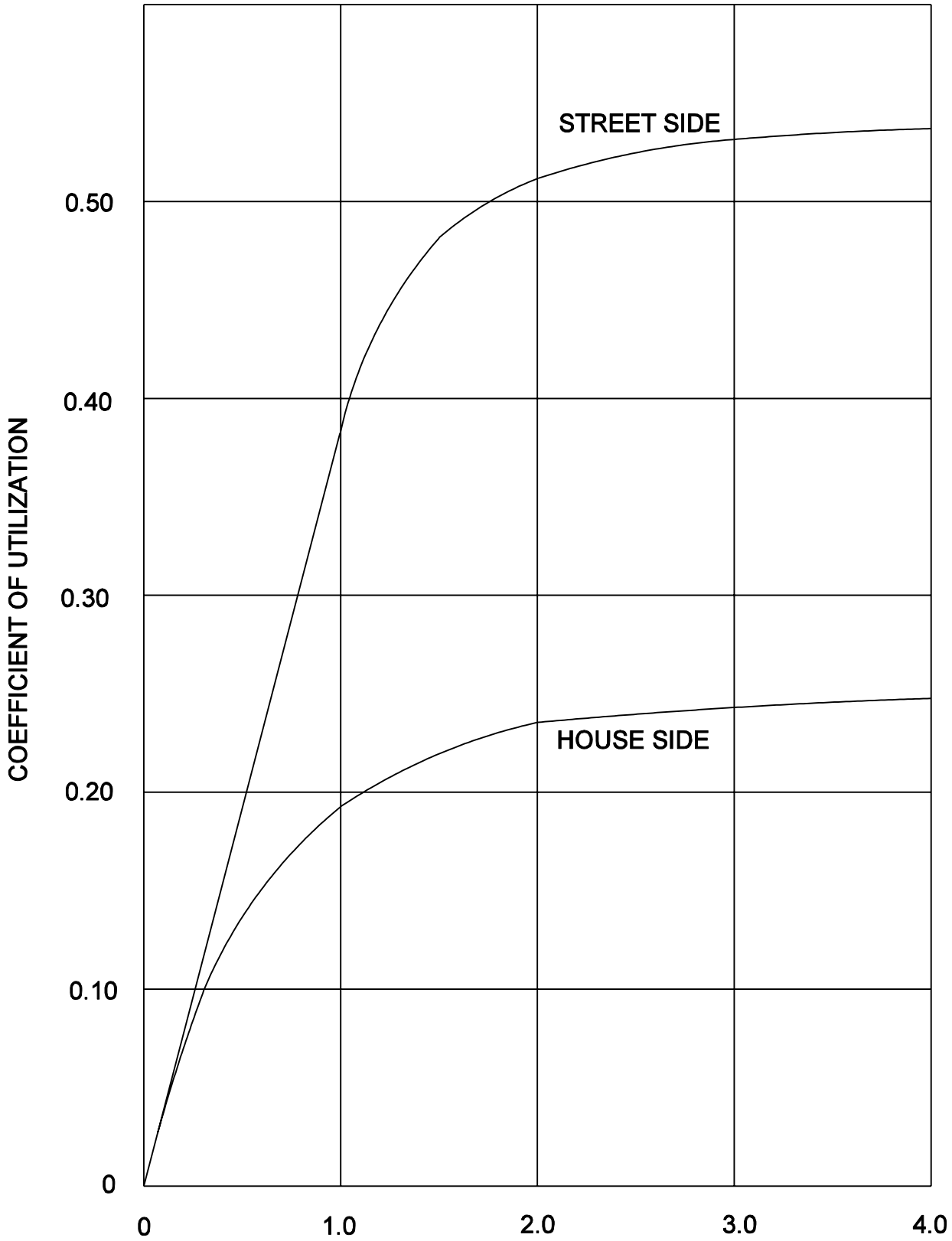

$$\text{RATIO} = \frac{\text{TRANSVERSE WIDTH (STREET OR HOUSE SIDE)}}{\text{LUMINAIRE MOUNTING HEIGHT}}$$

COEFFICIENT-OF-UTILIZATION CURVE
(M-S-Ⅱ Luminaire)

Figure 78-8B

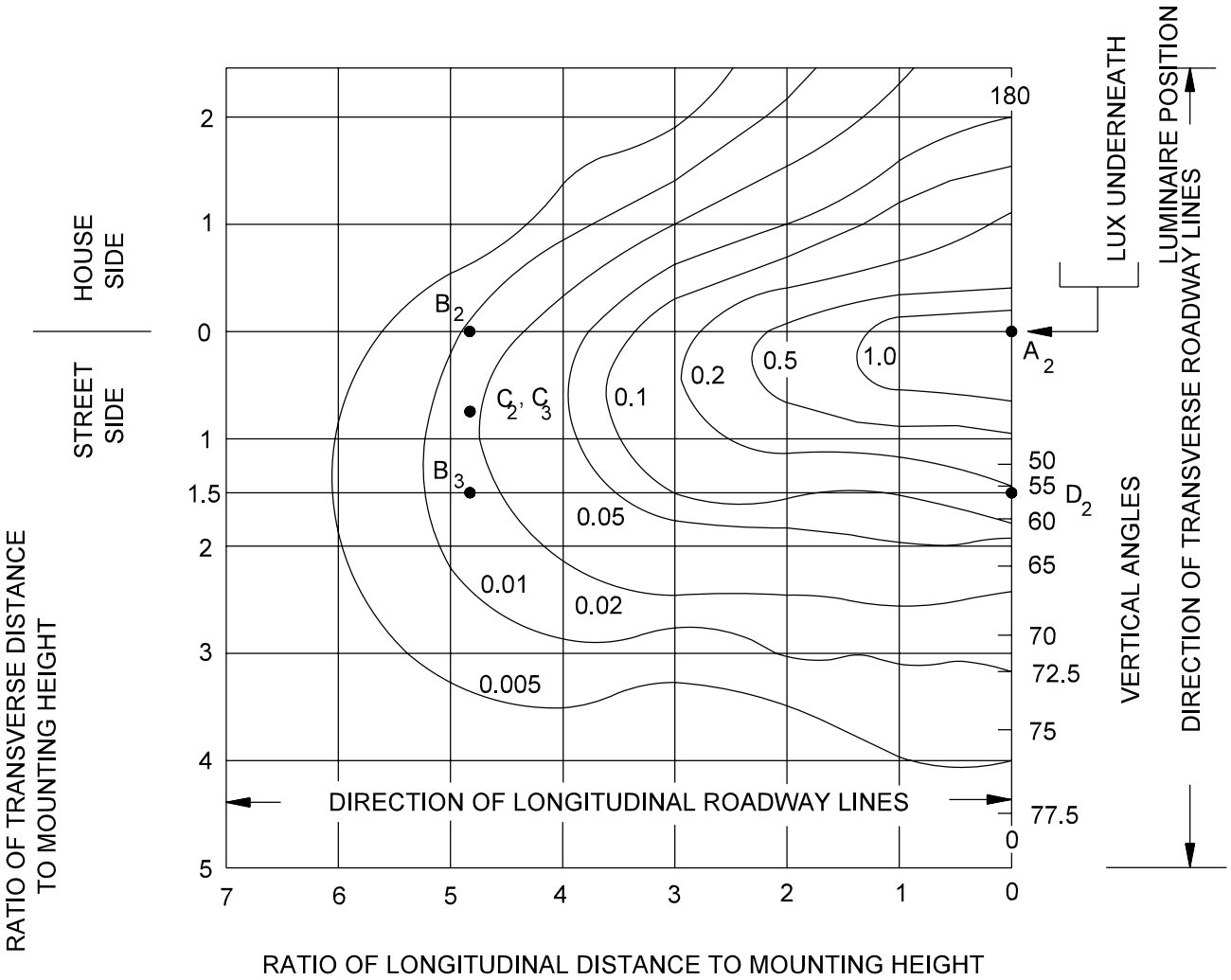

Note: Isolux diagram of horizontal lux on pavement surfaces for a luminaire providing a medium semi-cutoff, Type Ⅲ light distribution (per 1000 initial lamp lumens). The isolux multiply the values of isolux shown by the factors below

Mounting Height (m):	*8*	*9*	*10*	*11*	*12*	*13*	*14*	*15*
Factor:	*1.27*	*1.00*	*0.81*	*.087*	*0.58*	*0.38*	*0.41*	*0.38*

SAMPLE ISOLUX DIAGRAM
(Example 78-8.1)

Figure 78-8C

Check-point	Luminaire	Transverse		Longitudinal		Illumination (lx)	
		Dist. (m)	Ratio	Dist. (m)	Ratio	Contrib.	Total
A	1	18	1.5	116	9.67	0	1.25
	2	0	0	0	0	1.25	
	3	18	1.5	116	9.67	Neglig.	
B	1	--	--	---	---	Neglig.	0.03
	2	0	0	58	4.83	0.01	
	3	18	1.5	58	4.83	0.02	
C	1	--	--	---	---	Neglig.	0.04
	2	9	0.75	58	4.83	0.02	
	3	9	0.76	58	4.83	0.02	
D	1	0	0	116	9.67	Neglig.	0.18
	2	18	1.5	0	---	0.18	
	3	0	0	116	9.67	Neglig.	

Notes:

1. *The transverse ratio is the transverse distance divided by the mounting height.*
2. *The longitudinal ratio is the longitudinal distance divided by the mounting height.*
3. *Neglig. = negligible contribution.*

UNADJUSTED ILLUMINATION VALUES, EXAMPLE 78-8.1

Figure 78-8D

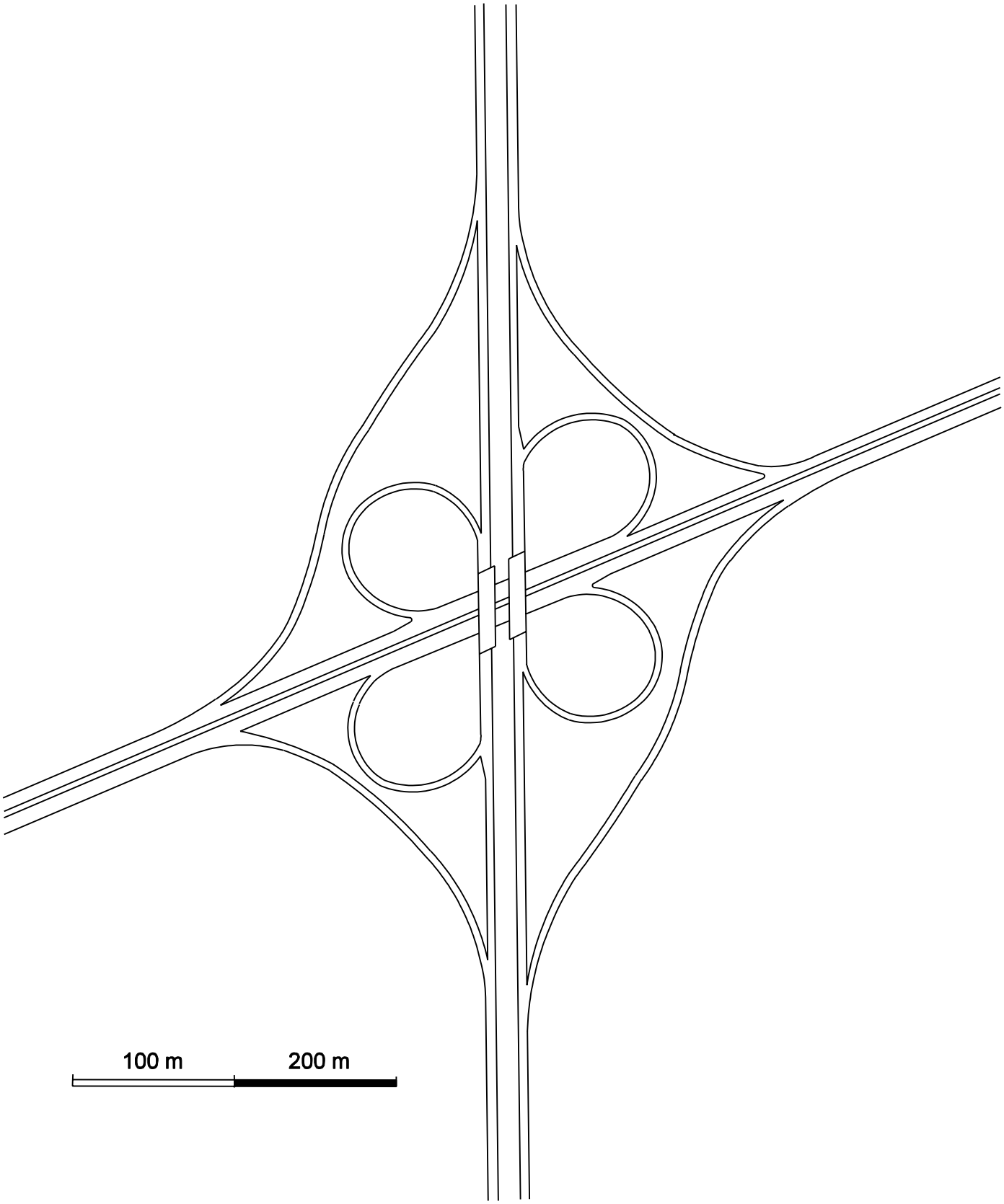

URBAN INTERCHANGE LIGHTING
(Example 78-8.2)

Figure 78-8E

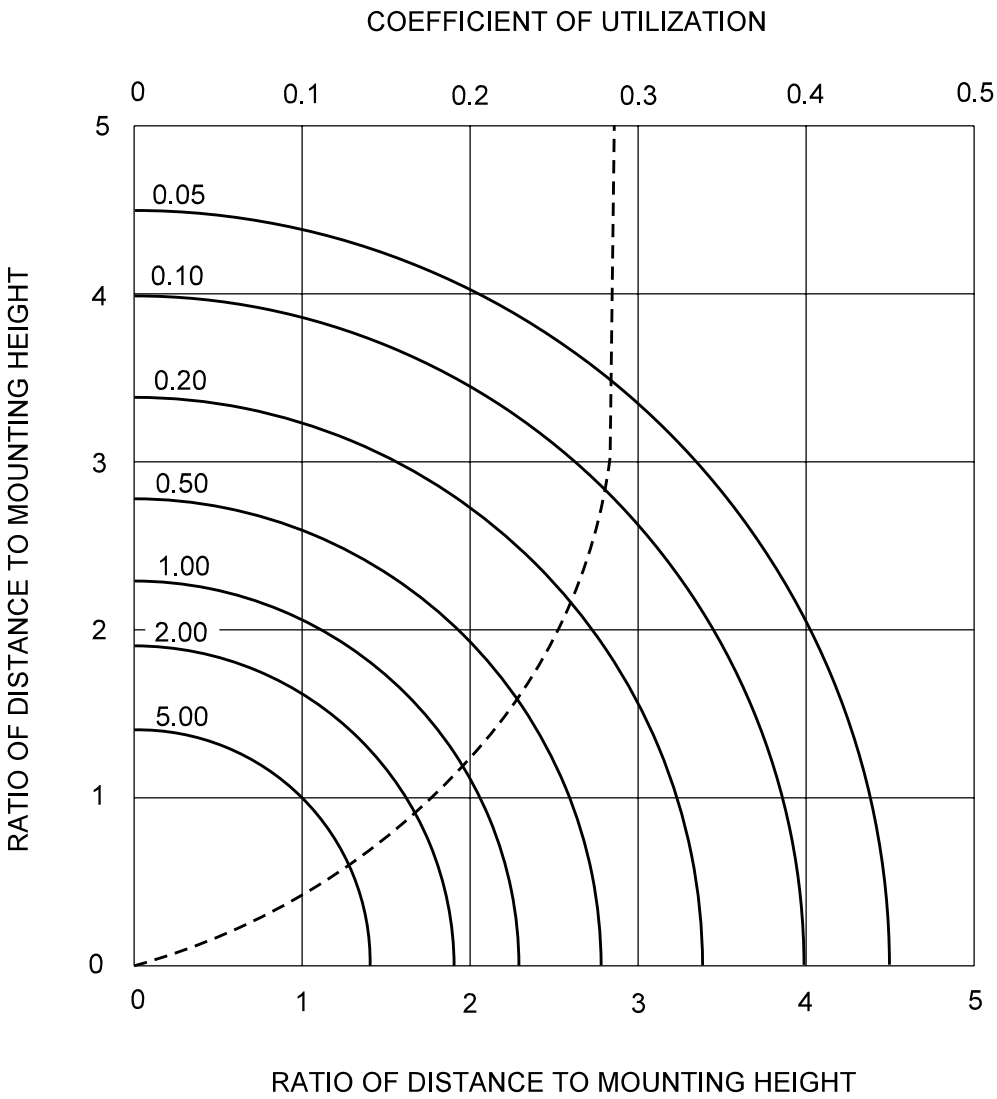

Note: Isolux diagram of horizontal lux on pavement surfaces for a luminaire providing a medium semi-cutoff, Type Ⅲ light distribution (per 1000 initial lamp lumens). The isolux multiply data are based on a luminaire mounting height of 30 m. For other mounting heights,the values of isolux shown by the factors below.

Mounting Height (m):	*18*	*21*	*24*	*27*	*30*	*33*	*36*
Factor:	*2.78*	*2.04*	*1.56*	*1.23*	*1.00*	*0.83*	*0.69*

SAMPLE ISOLUX DIAGRAM
(Example 78-8.2)

Figure 78-8F

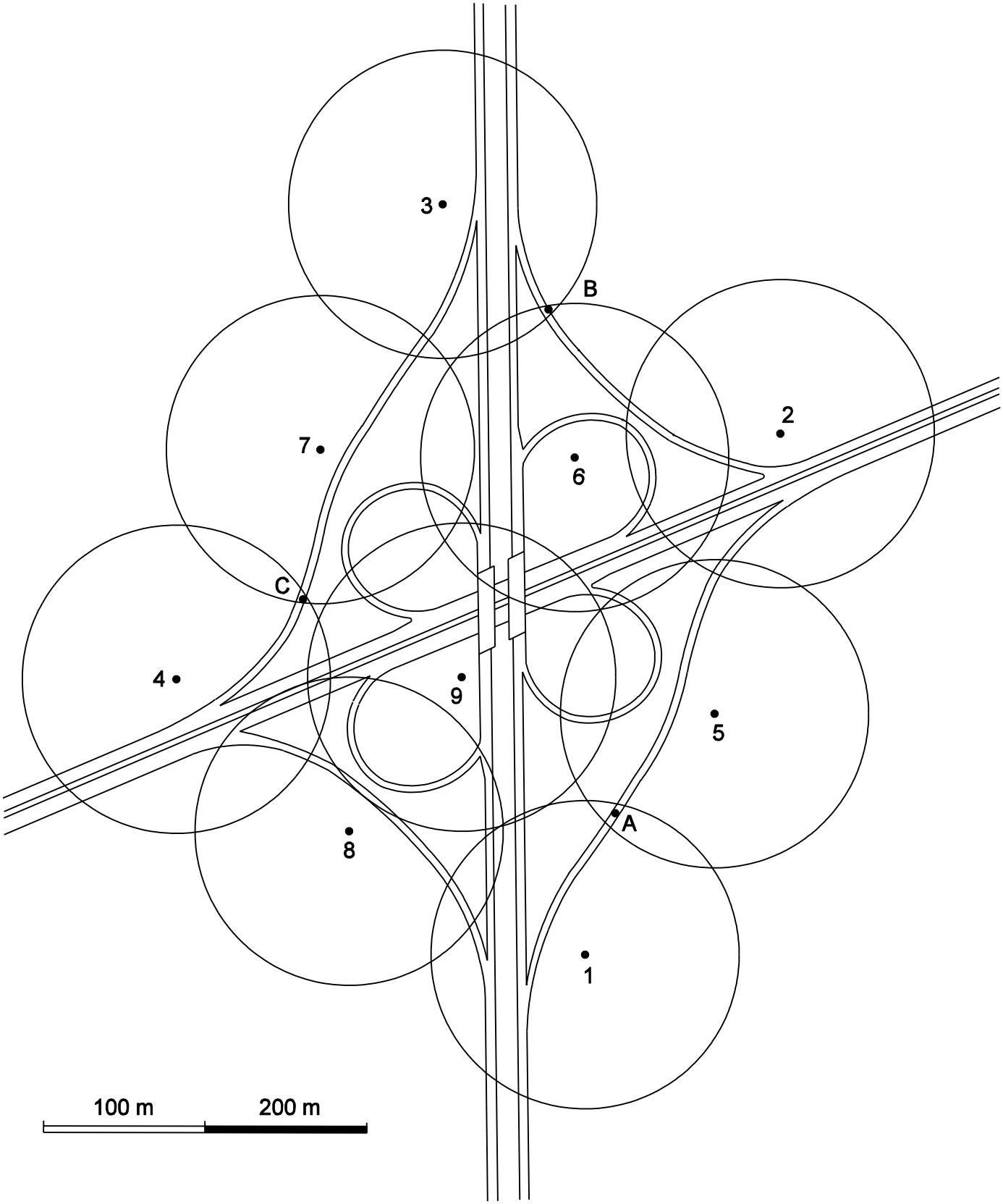

INTERCHANGE LIGHTING LAYOUT
(Example 78-8.2)

Figure 78-8G

Check-point	Mast No.	Distance from Mast (m)	Illumination (lx)	
			Contribution	Total
A	1	88	0.41	0.91
	5	88	0.41	
	9	123	0.09	
B	3	93	0.34	0.68
	6	93	0.34	
C	4	93	0.34	0.84
	7	93	0.34	
	9	109	0.16	

UNADJUSTED ILLUMINATION VALUES
FOR EXAMPLE 78-8.2

Figure 78-8H