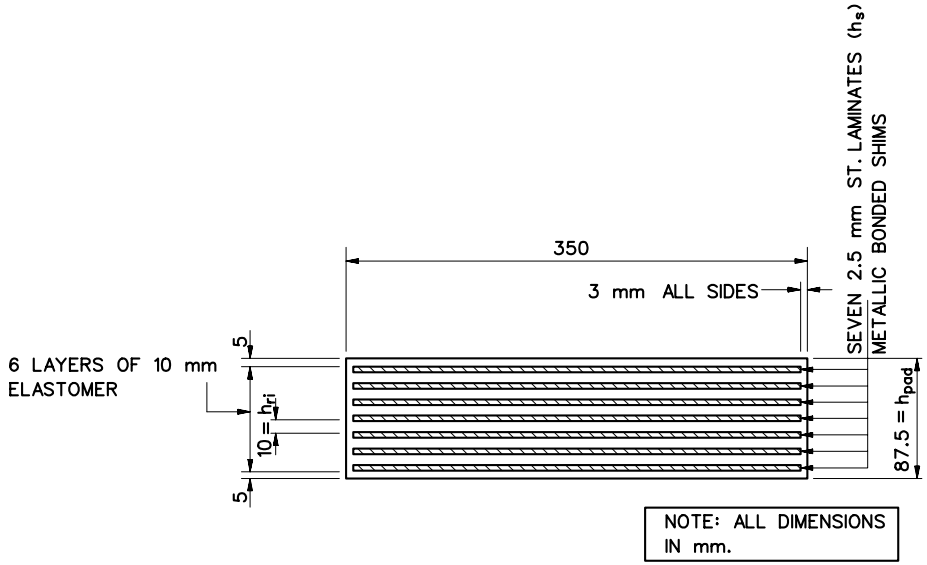

ELASTOMER LAYERS

Figure 67-4D