TABLE OF CONTENTS

Table of Contents 1

List of Figures 4
62-1A Material Properties of Concrete 4
62-1B Strut-and-Tie Model for Hammerhead Pier 4
62-1C Strut-and-Tie Model for Beam Ends 4
62-2A Reinforcing Bar Sizes 4
62-2B Reinforcing Bars, Areas (mm^2) Per One Meter Section 4
62-2C Minimum Concrete Cover for Design and Detailing 4
62-2D Minimum Center-to-Center Spacing of Bars 4
62-2E Development Lengths for Uncoated Bars in Tension, f'_c = 21 MPa 4
62-2F Development Lengths for Uncoated Bars in Tension, f'_c = 28 MPa 4
62-2G Development Lengths for Epoxy Coated Bars in Tension, f'_c = 21 MPa 4
62-2H Development Lengths for Epoxy Coated Bars in Tension, f'_c = 28 MPa 4
62-2 I Hooked Uncoated Bar Development Lengths, f'_c = 21 MPa 4
62-2J Hooked Uncoated Bar Development Lengths, f'_c = 28 MPa 4
62-2K Hooked Epoxy Coated Bar Development Lengths, f'_c = 21 MPa 4
62-2L Hooked Epoxy Coated Bar Development Lengths, f'_c = 28 MPa 4
62-2M Class A Splice Lengths for Uncoated Bars in Tension, f'_c = 21 MPa 4
62-2N Class A Splice Lengths for Uncoated Bars in Tension, f'_c = 28 MPa 4
62-2 O Class A Splice Lengths for Epoxy Coated Bars in Tension, f'_c = 21 MPa 4
62-2P Class A Splice Lengths for Epoxy Coated Bars in Tension, f'_c = 28 MPa 4
62-2Q Class B Splice Lengths for Uncoated Bars in Tension, f'_c = 21 MPa 4
62-2R Class B Splice Lengths for Uncoated Bars in Tension, f'_c = 28 MPa 4
62-2S Class B Splice Lengths for Epoxy Coated Bars in Tension, f'_c = 21 MPa 4
62-2T Class B Splice Lengths for Epoxy Coated Bars in Tension, f'_c = 28 MPa 4
62-2U Class C Splice Lengths for Uncoated Bars in Tension, f'_c = 21 MPa 4
62-2V Class C Splice Lengths for Uncoated Bars in Tension, f'_c = 28 MPa 4
62-2W Class C Splice Lengths for Epoxy Coated Bars in Tension, f'_c = 21 MPa 4
62-2X Class C Splice Lengths for Epoxy Coated Bars in Tension, f'_c = 28 MPa 4
62-2Y Hooks and Bends 4
62-2Z Bars in Section 4
62-2AA Bending Diagram Examples 4
62-2BB Cutting Diagram (Transverse Steel in Bridge Deck) 4
62-2CC Cutting Diagram (Hammerhead Stem Pier) 4
62-2DD Reinforced Concrete Bridge Approach Bill of Materials 4
62-3A Minimum Concrete Cover, Reinforced Concrete Slab Superstructure 4
62-3B Haunch Configurations for Reinforced Concrete Slab Superstructures 4
62-3C Typical Reinforced Concrete Slab Superstructure 4
62-3D Shrinkage and Temperature Reinforcement for Slab Superstructure 4
62-3E Integral Cap at Slab Superstructure (Typical Half-Section) 4

62-3F Integral Caps at Slab Superstructure (Half-Longitudinal Section) 5
62-3G Integral Cap at Slab Superstructure (Section Through End Bent)..... 5
62-3H Integral Cap at Slab Superstructure (Section Through Interior Bent) 5

Chapter Sixty-two 6

62-1.0 GENERAL DESIGN CONSIDERATIONS 6
62-1.01 Material Properties 6
62-1.02 Flexure 6
62-1.03 Limits for Reinforcing Steel 7
62-1.03(01) Maximum 7
62-1.03(02) Minimum..... 7
62-1.04 Shear and Torsion 9
62-1.05 Strut-and-Tie Model 11
62-1.06 Fatigue 12
62-1.07 Crack Control 13

62-2.0 REINFORCING STEEL 13
62-2.01 Grade 13
62-2.02 Sizes..... 14
62-2.03 Concrete Cover 14
62-2.04 Spacing of Reinforcement 14
62-2.05 Fabrication Lengths 15
62-2.06 Development of Reinforcement..... 15
62-2.06(01) Development Length in Tension..... 15
62-2.06(02) Development Length in Compression 16
62-2.06(03) Standard End Hook Development Length in Tension 16
62-2.07 Splices..... 16
62-2.07(01) General 16
62-2.07(02) Lap Splices in Tension..... 17
62-2.07(03) Lap Splices in Compression..... 17
62-2.07(04) Mechanical Splices 17
62-2.07(05) Welded Splices..... 17
62-2.08 Hooks and Bends 18
62-2.09 Epoxy-Coated Reinforcement 18
62-2.10 Bar Detailing..... 18
62-2.10(01) Standard Practice 18
62-2.10(02) Bars in Section 20
62-2.11 Bending Diagrams 20
62-2.12 Cutting Diagrams..... 21
62-2.13 Bill of Materials..... 21

62-3.0 REINFORCED CAST-IN-PLACE CONCRETE SLAB SUPERSTRUCTURE 22
62-3.01 General..... 22

62-3.01(01) Materials 22
62-3.01(02) Cover 22
62-3.01(03) Haunches 23
62-3.01(04) Substructures 23
62-3.01(05) Minimum Reinforcement 23
62-3.02 Computation of Slab Dead-Load Deflections 24
62-3.03 Construction Joints 25
62-3.04 Longitudinal Edge Beam Design 25
62-3.05 Shrinkage and Temperature Reinforcement 25
62-3.06 Reinforcing Steel and Constructibility 26
62-3.07 Drainage Outlets 26
62-3.08 Distribution of Concrete Railing Dead Load 27
62-3.09 Distribution of Live Loads 27
62-3.10 Shear Resistance 27
62-3.11 Minimum Thickness of Slab 27
62-3.12 Development of Flexural Reinforcement 28
62-3.13 Skewed Reinforced-Concrete Slab Bridge 28
62-3.14 Design Requirements for Integral Bent Cap at Slab Superstructure 28
62-3.15 Transverse Shrinkage and Temperature Reinforcement in the Top of the Slab at the Bent Caps 29
62-3.16 Fatigue-Limit State 29

LIST OF FIGURES

Figure

62-1A Material Properties of Concrete
62-1B Strut-and-Tie Model for Hammerhead Pier
62-1C Strut-and-Tie Model for Beam Ends
62-2A Reinforcing Bar Sizes
62-2B Reinforcing Bars, Areas (mm^2) Per One Meter Section
62-2C Minimum Concrete Cover for Design and Detailing
62-2D Minimum Center-to-Center Spacing of Bars
62-2E Development Lengths for Uncoated Bars in Tension, f'_c = 21 MPa
62-2F Development Lengths for Uncoated Bars in Tension, f'_c = 28 MPa
62-2G Development Lengths for Epoxy Coated Bars in Tension, f'_c = 21 MPa
62-2H Development Lengths for Epoxy Coated Bars in Tension, f'_c = 28 MPa
62-2 I Hooked Uncoated Bar Development Lengths, f'_c = 21 MPa
62-2J Hooked Uncoated Bar Development Lengths, f'_c = 28 MPa
62-2K Hooked Epoxy Coated Bar Development Lengths, f'_c = 21 MPa
62-2L Hooked Epoxy Coated Bar Development Lengths, f'_c = 28 MPa
62-2M Class A Splice Lengths for Uncoated Bars in Tension, f'_c = 21 MPa
62-2N Class A Splice Lengths for Uncoated Bars in Tension, f'_c = 28 MPa
62-2 O Class A Splice Lengths for Epoxy Coated Bars in Tension, f'_c = 21 MPa
62-2P Class A Splice Lengths for Epoxy Coated Bars in Tension, f'_c = 28 MPa
62-2Q Class B Splice Lengths for Uncoated Bars in Tension, f'_c = 21 MPa
62-2R Class B Splice Lengths for Uncoated Bars in Tension, f'_c = 28 MPa
62-2S Class B Splice Lengths for Epoxy Coated Bars in Tension, f'_c = 21 MPa
62-2T Class B Splice Lengths for Epoxy Coated Bars in Tension, f'_c = 28 MPa
62-2U Class C Splice Lengths for Uncoated Bars in Tension, f'_c = 21 MPa
62-2V Class C Splice Lengths for Uncoated Bars in Tension, f'_c = 28 MPa
62-2W Class C Splice Lengths for Epoxy Coated Bars in Tension, f'_c = 21 MPa
62-2X Class C Splice Lengths for Epoxy Coated Bars in Tension, f'_c = 28 MPa
62-2Y Hooks and Bends
62-2Z Bars in Section
62-2AA Bending Diagram Examples
62-2BB Cutting Diagram (Transverse Steel in Bridge Deck)
62-2CC Cutting Diagram (Hammerhead Stem Pier)
62-2DD Reinforced Concrete Bridge Approach Bill of Materials
62-3A Minimum Concrete Cover, Reinforced Concrete Slab Superstructure
62-3B Haunch Configurations for Reinforced Concrete Slab Superstructures
62-3C Typical Reinforced Concrete Slab Superstructure
62-3D Shrinkage and Temperature Reinforcement for Slab Superstructure
62-3E Integral Cap at Slab Superstructure (Typical Half-Section)

62-3F Integral Caps at Slab Superstructure (Half-Longitudinal Section)
62-3G Integral Cap at Slab Superstructure (Section Through End Bent)
62-3H Integral Cap at Slab Superstructure (Section Through Interior Bent)

CHAPTER SIXTY-TWO

REINFORCED CONCRETE

The *LRFD Bridge Design Specifications* Section 5 specifies the design requirements for concrete in all structural elements. This Chapter provides supplementary information specifically on the general properties of concrete and reinforcing steel and the design of reinforced concrete. Chapter Sixty-three discusses prestressed-concrete superstructures.

References shown following section titles are to the AASHTO *LRFD Bridge Design Specifications.*

62-1.0 GENERAL DESIGN CONSIDERATIONS

62-1.01 Material Properties

Reference: Article 5.4

The minimum yield strength for reinforcing steel should be taken as 420 MPa.

Figure 62-1A provides criteria for concrete materials in structural elements.

62-1.02 Flexure

Reference: Article 5.7

The flexural response of a beam section is obtained on the basis of its compatibility and equilibrium. Compatibility means that the stress-strain relationship for both steel and concrete follow a predetermined course. Once the steel yields, however, the relationship becomes undetermined. Equilibrium means that the sum of internal force effects is equal to the outside force effects.

To facilitate design, the *LRFD Specifications* provides a simplified sectional stress distribution for the strength limit state, the application of which is limited to an under-reinforced rectangular section. Stresses in both top and bottom steel mats are taken at yield, while the concrete stress block is assumed to be rectangular with an intensity of $0.85f_c'$ and a height as described by the equation as follows:

$$a = \frac{A_s f_y - A_s' f_y'}{0.85 f_c' b}$$

Location of the neutral axis is calculated as follows:

$$c = \frac{a}{\beta_1}$$

The factor β_1 should be taken as 0.85 for concrete strength not exceeding 28 MPa. For concrete strength exceeding 28 MPa, β_1 should be reduced at a rate of 0.05 for each 7 MPa of strength in excess of 28 MPa. However, β_1 should not be taken to be less than 0.65, in accordance with *LRFD* Article 5.7.2.2, and the nominal flexural resistance as follows:

$$M_n = A_s f_y [d_s - 0.5a] - A_s' f_y' (d_s' - 0.5a)$$

62-1.03 Limits for Reinforcing Steel

Reference: Article 5.7.3.3

62-1.03(01) Maximum

LRFD Specifications Article 5.7.3.3.1 regulates the maximum allowable steel for reinforced and prestressed members by limiting the c/d_e ratio to 0.42. The *LRFD Specifications* prohibits over-reinforced concrete components due to the following.

1. An inelastic mechanism controlled by the yield of steel provides more ductility.

2. At strength limit state, the damage to the concrete is more irreversible with over-reinforced components.

3. Obtaining a reliable estimate of flexural strength of an over-reinforced component requires a full-scale analysis of the sectional behavior using an inelastic concrete stress/strain relationship. The nominal strength as provided by *LRFD* Equation C5.7.3.3.1-1 can only be considered as a conservative approximate figure.

62-1.03(02) Minimum

In accordance with *LRFD* Article 5.7.3.3.2, the minimum reinforcement should be checked at any section to be certain that the amount of prestressed and non-prestressed reinforcement is enough to develop a factored flexural resistance, M_r, at least equal to the lesser of at least 1.2 times the cracking moment, M_{cr}, or 1.33 times the factored moment required by the applicable strength load combinations. Most often, $1.2M_{cr}$ controls in the maximum positive-moment

regions. In the region located approximately within the end one-third of the beam or span, 1.33 times the factored moment will control.

Use *LRFD* Equation 5.7.3.6.2-2 to compute the cracking moment.

$$M_{cr} = \frac{f_r I_g}{y_t}$$

Where:

M_{cr} = cracking moment (N-mm)
f_r = modulus of rupture of concrete as specified in *LRFD* Article 5.4.2.6 (MPa)
y_t = distance from the neutral axis to the extreme tension fiber (mm)

For a rectangular section (ignoring compression reinforcement), use the equation as follows:

$$M_{cr} = f_r \frac{I_g}{y_t}$$

The factored resistance is as follows:

$$M_r = 0.9M_n$$

Accordingly,

$$1.2M_{cr} \le 0.9A_s f_y \; d\left[1.0 - \frac{A_s f_y}{1.7bdf_c'}\right]$$

* * * * * * * * * *

<u>Example 62-1.1</u>

For b = 305 mm, h = 203 mm and f_c' = 28 MPa:

$$M_{cr} = (0.105)(305)(203^2)\sqrt{28} = 6983\,x\,10^3\ kN\text{-}mm,$$

d = 171 mm, and f_y = 420 MPa.

$$B = \frac{(-1.7)(bdf_c')}{f_y} = \frac{(-1.7)(305)(171)(28)}{420} = -5911\,mm^2$$

$$C = \frac{2.267 M_{cr} b f'_c}{f_y^2} = \frac{(2.267)(6983\ x\ 10^3)(305)(28)}{420^2} = 766\ 000\ mm^4$$

from which,

$$A_s = 0.5\left(-B - \sqrt{B^2 - 4C}\right) = 133\ mm^2 \qquad \text{(Equation 62-1.1)}$$

or a ratio of $\rho = \dfrac{133}{(305)(203)} = 0.002\,15$

This process also provides the minimum steel in both directions at the top and bottom of a concrete slab bridge.

* * * * * * * * * *

62-1.04 Shear and Torsion

Reference: Article 5.8

The *LRFD Specifications* allows two methods of shear design for prestressed concrete, the strut-and-tie model and the sectional-design model. The sectional-design model is appropriate for the design of a typical bridge girder, slab, or other region of components where the assumptions of traditional beam theory are valid. This theory assumes that the response at a particular section depends only on the calculated values of the sectional force effects such as moment, shear, axial load, and torsion, but it does not consider the specific details of how the force effects were introduced into the member.

In a region near a discontinuity, such as an abrupt change in cross-section, opening, coped (dapped) end, deep beam, or corbel, the strut-and-tie model should be used. See *LRFD* Articles 5.6.3 and 5.13.2.

LRFD Article 5.8.3 discusses the sectional-design model. Subsections 1 and 2 describe the applicable geometry required to use this technique to design web reinforcement.

The nominal resistance is taken as the lesser of the following:

$$V_n = V_c + V_s + V_p \qquad \text{(LRFD Eq. 5.8.3.3-1)}$$

or

$$V_n = 0.25\, f'_c\, b_v d_v + V_p \qquad \text{(LRFD Eq. 5.8.3.3-2)}$$

For a non-prestressed section, $V_p = 0$.

LRFD Equation 5.8.3.3-2 represents an upper limit of V_n to ensure that the concrete in the web will not crush prior to yield of the transverse reinforcement.

The nominal shear resistance provided by tension in the concrete is computed as follows:

$$V_c = 0.083\beta\sqrt{f_c'}\, b_v d_v \qquad \text{(LRFD Eq. 5.8.3.3-3)}$$

The contribution of the web reinforcement is computed as follows:

$$V_s = \frac{A_v f_y d_v \left(\cot\theta + \cot\alpha\right)\sin\alpha}{s} \qquad \text{(LRFD Eq. 5.8.3.3-4)}$$

Where the angles, θ and α, represent the inclination of the diagonal compressive forces measured from the horizontal beam axis and the angle of the web reinforcement relative to the horizontal beam axis, respectively.

For where the web shear reinforcement is vertical (α = 90°), V_s simplifies to the following:

$$V_s = \frac{A_v f_y d_v \cot\theta}{s}$$

Both θ and β are functions of the longitudinal steel strain (ε_x) which, in turn, is a function of θ. Therefore, the design process is an iterative one. A detailed methodology along with the design tables are provided in *LRFD* Article 5.8.3.4.2. For a section including at least the minimum amount of transverse reinforcement specified in *LRFD* Article 5.8.2.5, the values of β and θ should be taken from *LRFD* Table 5.8.3.4.2-1. For a section that does not include the minimum transverse reinforcement requirements, *LRFD* Table 5.8.3.4.2-2 should be used to determine β and θ.

This process may be considered an improvement in accounting for the interaction between shear and flexure and attempting to control cracking at strength-limit state.

For a non-prestressed concrete section not subjected to axial tension and including at least the minimum amount of transverse reinforcement specified in *LRFD* Article 5.8.2.5, or having an overall depth of less than 400 mm, a value of 2.0 may be taken for β and a value of 45 deg may be taken for θ.

Transverse shear reinforcement should be provided if the following applies.

$$V_u > 0.5\,\phi\left(V_c + V_p\right) \qquad \text{(}\textit{LRFD}\text{ Eq. 5.8.2.4-1)}$$

Where transverse reinforcement is required, the area of steel shall not be less than the following:

$$A_v = 0.083\sqrt{f'_c}\,\frac{b_v s}{f_y} \qquad \text{(LRFD Eq. 5.8.2.5-1)}$$

If the reaction introduces compression into the end of the member, the critical section for shear is taken as the larger of $0.5d_v\cot\theta$ or d_v, measured from the face of the support (see *LRFD* Article 5.8.3.2).

Torsion is most often not a major consideration. Where torsion effects are present, the member should be designed in accordance with *LRFD* Articles 5.8.2 and 5.8.3.6. A situation that may require a torsion design includes the following:

1. cantilever brackets connected perpendicular to a concrete beam, especially if a diaphragm is not located opposite the bracket; or

2. concrete diaphragms used to make precast beams continuous for live load where the beams are spaced differently in adjacent spans.

62-1.05 Strut-and-Tie Model

Reference: Article 5.6.3

Members, if loaded, indicate the presence of definite stress fields which can individually be represented by tensile or compressive resultant forces as their vectoral sums. The load paths taken by these resultants form a truss-like pattern which is optimum for the given loading and that the resultants are in reasonable equilibrium, especially after cracking. The compressive concrete paths are the struts, and the reinforcing steel groups are the ties. The model is shearless.

The model has significant application for bridge components and parts such as pier caps, beam ends, post-tensioning anchorage zones, etc. A thorough presentation of the model can be found in the *PCI Precast Prestressed Concrete Bridge Design Manual*, Chapter 8, *Design of Highway Bridges based on AASHTO LRFD Design Specifications*, and in *Towards a Consistent Design of Structural Concrete*, PCI Journal, Vol. 32, No. 3, 1987. The *LRFD Specifications* provides adequately for design. If the model is not used for actual proportioning, it provides a fast check to ensure that no loose ends remain in design, especially for the appropriate anchorage of the steel.

Application of the model for a hammerhead pier is demonstrated in Figure 62-1B. There are five beams supported by the pier, of which two affect the design of a cantilever. The truss geometry selected here ensures that the struts, being parallel, are independent from each other. The

scheme is indicative of the significance of a well-proportioned haunch. This design will yield approximately the same amount of steel in both ties. The steel in both ties is extended to the boundaries of their respective struts, then hooked down. The 90-deg hook of Tie No. 1 is further secured to the concrete by secondary steel, and the hook of Tie No. 2 is positioned in, and normal to, Strut No. 1.

This example was selected because of the potential excessive cracking of a pier head invariably designed as a beam. Normal beam design is unconservative for this application, due to the following:

1. early discontinuity of steel;

2. an erroneous estimate for the location of maximum moment (usually taken at the face of the pier-column); and

3. anchoring the steel in cracked zones.

Cracking is associated with at least partial debonding. Thus, the bonding capacity of cracked concrete cannot be considered completely reliable. Improperly-anchored steel is a design consideration in which mistakes are made, and the *LRFD Specifications* requires that steel should not be anchored in cracked zones of concrete.

The model can also be used for the approximate analysis of the beam end. Figure 62-1C(a) shows a convenient way of checking the adequacy of reinforcement in the end-zone and the magnitude of compressive stresses in the web. In lieu of refined calculations, the angle θ may be assumed as 30 deg.

Figure 62-1C(b) indicates an application of the model to estimate the transverse forces in the bearing area to be resisted by the cage.

62-1.06 Fatigue

References: Articles 3.4.1, 3.6.1.4, and 5.5.3

The fatigue limit state is not normally a critical issue. Fatigue need not be considered for the deck where the permanent stress, f_{min}, is compressive and exceeds twice the maximum tensile live load stress.

Assuming r/h = 0.3, *LRFD* Equation 5.5.3.2-1 may be rearranged for easier interpretations as follows:

$$f_f + 0.33\ f_{\min} \leq 161.5\ MPa$$

The *LRFD Specifications* shows a change in computing f_f. It is the stress range due to 75% of a single truck per bridge (lane load excluded) with reduced impact (15%) and with the major axles of the truck at a constant spacing of 9 m, instead of all contributing lanes being loaded. Also, the *LRFD Specifications* specifies that, if the bridge is analyzed by the approximate distribution method, live-load distribution factors for one design lane loaded should be used.

62-1.07 Crack Control

Reference: Article 5.7.3.4

Each concrete component should be proportioned to control cracking. The design should be in accordance with *LRFD* Article 5.7.3.4, except for an empirical deck design, which should be in accordance with *LRFD* Article 9.7.2. If designing for crack-control, the following values for *Z* should be used, unless a more severe condition is warranted.

1. 17 500 N/mm for footing;
2. 23 000 N/mm for deck and slab; and
3. 30 000 N/mm for all other components.

For a more detailed description of a slab design, see Section 61-2.02(05). Several bars, of minimum #13 size, at moderate spacing, are more effective in controlling cracking than one or two larger bars of equivalent area.

62-2.0 REINFORCING STEEL

62-2.01 Grade

Reference: Article 5.4.3.1

Steel reinforcing bars are manufactured as either smooth or deformed bars. Deformed bars have ribbed projections that grip the concrete to provide a better bond between the steel and the concrete. Main bars, spirals, and ties are always deformed.

Reinforcing bars should be in accordance with ASTM A615M, Grade 420, with a yield strength of 420 MPa. The modulus of elasticity, E_s, should be taken as 200 000 MPa.

62-2.02 Sizes

Reinforcing bars are referred to by number, and they vary in size from #10 to #57. Figures 62-2A and 62-2B show the sizes, bar spacings, and properties of the types of bars used.

To avoid handling damage, the minimum bar size should be #13. Longitudinal ties in compression members may be #10 (see Section 67-3.03).

62-2.03 Concrete Cover

Reference: Article 5.12.3

See Figure 62-2C for criteria for minimum concrete cover for various applications. The values in Figure 62-2C are based on $0.40 \leq w/c \leq 0.50$. All clearances to reinforcing steel shall be shown on the plans.

62-2.04 Spacing of Reinforcement

Reference: Article 5.10.3

For minimum spacing of bars, see Figure 62-2D.

Fit and clearance of reinforcement should be checked by means of calculations and large-scale drawings. Skews will tend to aggravate problems of reinforcing fit. Tolerances normally allowed for cutting, bending, and locating reinforcement should be considered.

Some of the common locations of interference are as follows:

1. between slab reinforcement and reinforcement in a monolithic end bent or intermediate bent;
2. vertical column bars projecting through main reinforcement in a pier cap;
3. the area near an expansion device;
4. anchor plates for steel girders;
5. at anchorages for a post-tensioned system; or
6. between prestressing (pretensioned or post-tensioned) steel and reinforcing steel stirrups, ties, etc.

The distance from the face of concrete to the center of the first bar should be shown for up to approximately a 2-m width. Where the distance between the first and last bars is such that the number of bars required results in spacings in increments of other than 5 mm, the bars should be

shown to be equally spaced. For a greater width, one odd spacing should be used with increments of a 5-mm spacing for the rest.

62-2.05 Fabrication Lengths

See Figure 62-2A for maximum and normal bar lengths for fabrication. For ease of hauling and handling, the maximum length should be reduced where the location of the splice is arbitrary. The maximum length of bars extending above a horizontal joint (e.g., from a footing into a wall) should be 3 m.

62-2.06 Development of Reinforcement

Reference: Article 5.11.2

62-2.06(01) Development Length in Tension

Development length, l_d, or anchorage of reinforcement, is required on both sides of a point of maximum stress at any section of a member.

Development of bars in tension involves calculating the basic development length, l_{db}, which is modified by factors to reflect bar spacing, cover, enclosing transverse reinforcement, top-bar effect, type of aggregate, epoxy coating, and the ratio of required area to provide the area of reinforcement to be developed.

The development length, l_d (including all applicable modification factors), must not be less than 300 mm.

Figures 62-2E through 62-2H show the tension development length for both uncoated and epoxy coated bars for normal weight concrete with specified 28-day strength of 21 or 28 MPa. For Class A concrete (f'_c = 24 MPa), use the development lengths shown for f'_c = 21 MPa unless calculated independently.

Development lengths shown in the figures for both uncoated and epoxy-coated bars must be multiplied by a factor of 2.0 for bars with a cover of d_b (bar diameter) or less, or with a clear spacing between bars of $2d_b$ or less. Development lengths shown for epoxy-coated bars may be multiplied by a factor of 0.80, if the cover is $3d_b$ or more and the clear spacing between bars is $6d_b$ or more.

62-2.06(02) Development Length in Compression

The standard procedure is to use tension development lengths for bars in either tension or in compression. This ensures that an adequate development length will be provided in a compression member that may be primarily controlled by bending.

62-2.06(03) Standard End Hook Development Length in Tension

Standard end hooks, utilizing 90-deg or 180-deg end hooks, are used to develop bars in tension where space limitations restrict the use of straight bars. End hooks on compression bars are not effective for development-length purposes. The values shown in Figures 62-2 I and 62-2L show the tension development lengths for both uncoated and epoxy-coated hooked bars for normal weight concrete with specified strength of 21 or 28 MPa. For Class A concrete (f'_c = 24 MPa), use development lengths shown for f'_c = 21 MPa unless calculated independently.

See the *LRFD Specifications* Article C5.11.2.4.1 figure for hooked-bar details for the development of standard hooks.

62-2.07 Splices

Reference: Article 5.11.5

62-2.07(01) General

Lap splices or mechanical splices may be used to splice reinforcing bars: Lap splicing of reinforcing bars is the most common method. The plans should show the locations and lengths of all lap splices. Due to splice lengths required, lap splices are not permitted for #43 bars or larger. However, if #43 bars or larger are necessary, mechanical bar splices should be used. Mechanical bar splices should also be considered in lieu of lap splices in a highly-congested area. Mechanical splices are required for tension tie members.

Lap splices, for either tension or compression bars, should not be less than 300 mm. See the INDOT *Standard Specifications* for additional splice requirements.

If transverse reinforcing steel in a bridge deck will be lapped near a longitudinal construction joint, show the entire lap splice on the side of the construction joint that will be poured last.

62-2.07(02) Lap Splices in Tension

Many of the same factors which affect development length affect splices. Consequently, tension lap splices are a function of the bar development length, l_d. Tension lap splices are classified as A, B, or C. Bars should be spliced at points of minimum stress.

For a tension splice, the length of a lap splice between bars of different sizes should be governed by the smaller bar.

Figures 62-2M through 62-2X show tension lap splices for both uncoated and epoxy-coated bars for normal weight concrete with specified strength of 21 or 28 MPa. For class A Concrete (f'_c = 24 MPa), use splice lengths shown for f'_c = 21 MPa unless calculated independently.

Splice lengths for spacing ≥ 150 mm, shown in the Figures for both uncoated and epoxy coated bars, must be multiplied by a factor of 2.0 for bars with a cover of d_b or less, or with a clear spacing between bars of $2d_b$ or less, where d_b equals the bar diameter. Splice lengths shown for epoxy-coated bars may also be multiplied by a factor of 0.8 if cover is $3d_b$ or more and clear spacing between bars is $6d_b$ or more.

62-2.07(03) Lap Splices in Compression

Lap splices in a compression member are sized for tension lap splices. The design of a compression member, such as a column, pier wall, or abutment wall, involves the combination of vertical and lateral loads. Therefore, the policy of requiring a tension lap splice accounts for the possibility that the member design may be primarily controlled by bending. Also, the increase in cost of additional splice-reinforcement material is small.

62-2.07(04) Mechanical Splices

A mechanical splice is a proprietary splicing mechanism. The requirements for mechanical splices are found in *LRFD* Articles 5.11.5.2.2, 5.11.5.3.2, and 5.11.5.5.2. All mechanical connectors should develop not less than 125% of the specified yield strength of the bar regardless of the stress level in the bar.

62-2.07(05) Welded Splices

Splicing of reinforcing bars by means of welding is not permitted.

62-2.08 Hooks and Bends

Reference: Article 5.11.2.4

For standard hook or bend diameters, see Figure 62-2Y. The value of A should be used for a standard 90-deg hook for both longitudinal reinforcement (end hook) and transverse reinforcement (stirrup or tie hook). For transverse reinforcement where the bar size is #10 or #13 and shorter tail lengths are required for better constructability, non-standard hooks may be used. Dimensions and bend diameters of non-standard hooks should be shown on the plans and should be in accordance with the CRSI *Manual of Standard Practice*. The total length of each bent bar should be rounded up to the next 20 mm. The legs of the bar should add up to this total. The difference must be added to a leg of the bar.

62-2.09 Epoxy-Coated Reinforcement

References: Articles 2.5.2.1.1 and 5.12.4

Epoxy-coated reinforcement should be used at the locations as follows:

1. the bridge deck;
2. the top 300 mm of a reinforced-concrete slab bridge;
3. the end bents and wingwalls of an integral end bent beam and deck-type structure;
4. the end bents and wingwalls of a beam and deck-type structure where deck expansion joints are located at the ends of the structure;
5. above the footing of each interior substructure unit that is located below a deck expansion joint. For a tall pier or bent, engineering judgment should be exercised;
6. concrete bridge railing;
7. bars extending into the deck from the beams or substructure; or
8. reinforced-concrete bridge approaches.

For all other locations, use uncoated bars. These include the following:

1. piers, bents, or abutments that are located adjacent to a pavement surface; or
2. a reinforced-concrete retaining wall.

62-2.10 Bar Detailing

62-2.10(01) Standard Practice

The following provides the standard practice for detailing reinforcing bars.

1. Reinforcing bars should be called out in the plan, elevation, and sections to clearly indicate the size, location, and spacing of the individual bars. The number of reinforcing bars should be called out in only one view, usually the plan or elevation view. In other views, only the bar size and length (optional) or bar mark should be called out.

2. In a plan or elevation view, only the first bar and the last bar of a series of bars need be drawn, and the number of bars indicated between. In a section view, all bars should be shown.

3. All dimensions on details are measured on centerlines of bars, except where cover, e.g., 50 cl., is indicated.

4. Straight bars will be designated by size and length (e.g., #13 x 4600).

5. Straight-bar lengths should be in 100-mm multiples, except for short vertical bars in a railing or a parallel wing, which should be in 25-mm multiples.

6. Bent bars are given a bar mark of which the first two numbers indicate the size of the bar, and the last two numbers, 01 to 99, indicate the mark. Each bar mark may be given a lower-case-letter suffix to indicate the location of the bar in the proper element of the structure (e.g., 2501a, 2502a). The following letters may be used as suffixes:

   a, b, c, d, f, h, k, m, n, p, r, s, t, u, v, w, x, y, and z.

7. Assign letters in sequence with superstructure first and substructure last. For the substructure, assign letters in sequence for each abutment or bent except where these are detailed in pairs. The one letter is to apply to both.

8. Epoxy-coated bars will be suffixed by the letter E (e.g., #19E x 4600, 2501aE). If all bars are epoxy-coated, a note will suffice.

The following should be considered when selecting and detailing reinforcing steel.

1. Where possible, make similar bars alike to result in as few different bars in a structural element as practical.

2. If rounding off lengths of bars, one length should not encroach upon the minimum clearances.

3. Consideration should be given to ease of placement of bars. A bar should not have to be threaded through a maze of other bars. The bars should be located so that they can be easily supported or tied to other reinforcement.

4. It may be more practical to lap two bent bars than to have a bar with five or six bends.

62-2.10(02) Bars in Section

Figure 62-2Z provides a section through a hypothetical member showing some of the accepted methods for detailing reinforcing steel. The following list describes some of the concerns and observations that should be considered when detailing reinforcing steel.

A section view should be drawn to a large-enough scale to clearly show reinforcing details.

1. Stirrups or other bars not shown end-on should be drawn as single broken or unbroken lines for a scale smaller than 1:10, or as double unbroken lines for a scale of 1:10 or larger.

2. Bends of standard hooks and stirrups need not be dimensioned. However, all bends should be drawn to scale.

3. Bars shown end-on should be shown as small circles. The circles may be left open or may be shown as a dot. However, the symbol used should be consistently applied on the drawing. If bars and holes will be shown, the bars should be shown as solid.

4. An arrowhead pointing to the bar or a circle drawn around the bar are the acceptable methods of detailing for a bar shown end-on. An arrowhead should point directly to the bar.

5. Sections cut at specific locations along a member are preferred to a typical section for a complex reinforcing pattern.

6. Corner bars enclosed by stirrups or ties should be shown at the corner of the bend (see Figure 62-2Z).

62-2.11 Bending Diagrams

The following is the standard practice for detailing bending diagrams.

1. All dimensions are measured out-to-out of bars.

2. All bent-bar partial dimensions should be shown to the nearer 5 mm.
3. The overall length of a bent bar should be rounded up to the next 20 mm.

See Figure 62-2AA for information on bending diagrams.

62-2.12 Cutting Diagrams

Two methods of showing cutting diagrams are provided. Other methods may be used at the discretion of the designer. The first is used where two sets of the same size bars are required and the second is used where only one bar of each size is required. Cutting diagrams are given a bar mark like bent bars. The first method is shown in an example of a skewed deck with the same bars in the top and bottom mats. Figure 62-2BB applies to the transverse steel in a bridge deck. The pertinent information should be determined as follows:

1. Determine the longest, *B*, and shortest, *A*, bars required to the nearer 20 mm.
2. Determine the number of bars required.
3. Divide the number of spaces (the number of bars minus 1) by the difference in length between the longest and shortest bars to obtain the increment. Round the increment to the nearest millimeter.
4. The length *L* is the sum of *A* + *B*.

The second method should be used such as in an asymmetric widening of a hammerhead pier. An even number of bars will be provided by this cutting group. Figure 62-2CC shows the cantilevered portion of a hammerhead pier.

1. Determine the longest ,*B*, and shortest, *A*, bars required to the nearer 20 mm.
2. Determine the number of bars required.
3. Divide the number of spaces (the number of bars minus 1) by the difference in length between the longest and shortest bars to obtain the increment *N*. Round the increment to the nearest millimeter.
4. Determine dimensions *B* and *C* as follows:

$$B \text{ or } C = \frac{A + D}{2 \pm 0.5N}$$

5. The length $L = A + D = B + C$. Adjust dimensions as necessary to make them fit this equation.

62-2.13 Bill of Materials

The following applies to the Bill of Materials.

1. The bars should be listed in descending order of size..
2. For each bar size, bent bars should be listed sequentially by number first followed by straight bars.
3. Straight bars should be listed in descending order of length.
4. Subtotals of the mass should be provided for each bar size.
5. Plain and epoxy-coated bars should be billed separately with totals for each.
6. There should be separate Bills of Materials shown on the appropriate plan sheet for each structural element.
7. If two structural elements are very similar in dimension and reinforcement, it is permissible to combine the quantities into one Bill of Materials.

Figure 62-2DD illustrates a typical Bill of Materials for a reinforced-concrete bridge approach.

62-3.0 REINFORCED CAST-IN-PLACE CONCRETE SLAB SUPERSTRUCTURE

62-3.01 General

The reinforced cast-in-place concrete slab superstructure is frequently used due to its suitability for short spans and its ease of construction. It is the simplest among all superstructure systems.

This Section provides information for the design of a reinforced cast-in-place concrete slab superstructure that amplifies or clarifies the requirements of the *LRFD Bridge Design Specifications*.

62-3.01(01) Materials

Reference: Article 5.4

Class C concrete should be used. See Figure 62-1A for concrete properties.

62-3.01(02) Cover

Reference: Article 5.12.3

Figure 62-3A provides criteria for minimum concrete cover for all structure elements. All clearances to reinforcing steel should be shown on the plans.

62-3.01(03) Haunches

Straight haunches are preferred to parabolic haunches because straight haunches are relatively easy to form yet result in relatively proper stress flow.

Haunching is used to decrease maximum positive moments in a continuous structure by attracting more-negative moments to the haunches and to provide adequate resistance at the haunches for the increased negative moments. It is a simple, effective, and economical way to enhance the resistance of a thin concrete slab. As illustrated in Figure 62-3B, there are three ways of forming the haunch. The parabolic shape (a) is the most natural in terms of stress flow, and certainly the most aesthetic. It is preferred for where the elevation is frequently in view. The parabolic haunch, however, is not the easiest to form and, as alternatives, the straight haunch (b), and the drop panel (c), should be considered where appropriate. The narrow pile cap (d), used in conjunction with extended pile substructures, does not qualify as an effective haunch.

Figure 62-3C depicts the elevation and plan of a three-span, continuous haunched slab bridge with an extensive skew. The preferable ratio between interior and end span is approximately 1.25 to 1.33 for economy, but the system permits considerable freedom in selecting span ratio. The ratio between the depths at the centerlines of the interior piers and at the point of maximum positive moment should be between 2.0 and 2.5. Except for aesthetics, the length of the haunch need not exceed the kL values indicated in Figure 62-3B, where L is the end span length. Longer haunches may be unnecessarily expensive or structurally counterproductive.

62-3.01(04) Substructures

The following describes the practice for types of substructures used.

1. <u>End Supports</u>. Where possible, use integral end bents. Their use is not restricted by highway alignment or skew. The maximum bridge length is 60 m for the use of integral end bents without a special analysis. See Section 59-2.02 for more information on end supports, including the use of non-integral end bents and abutments and the use of integral end bents where the bridge length exceeds 60 m.

2. <u>Interior Supports</u>. See Section 59-2.03 for practices for the selection of the type of interior support (e.g., piers, frame bents).

62-3.01(05) Minimum Reinforcement

Reference: Articles 5.7.3.3.2, 5.10.8, and 5.14.4.1

In both the longitudinal and transverse directions, at both the top and bottom of the slab, the minimum reinforcement should be determined in accordance with *LRFD Specifications* Articles 5.7.3.3.2 and 5.10.8. The first is based on the cracking flexural strength of a component, and the second reflects requirements for shrinkage and temperature. In a slab superstructure, the two articles provide for nearly identical amounts of minimum reinforcement.

According to *LRFD Specifications* Article 5.14.4.1, bottom transverse reinforcement, with the minimum requirements described above as notwithstanding, may be determined either by two-dimensional analysis or as a percentage of the maximum longitudinal positive moment steel in accordance with *LRFD* Equation 5.14.4.1-1. The span length, *L*, in the equation should be taken as that measured from the centerline to centerline of the supports. For a heavily skewed or curved bridge, the analytical approach is recommended.

Section 62-3.05 provides a simplified approach for shrinkage and temperature steel requirements.

62-3.02 Computation of Slab Dead-Load Deflections

Reference: Article 5.7.3.6.2

For a concrete-deck-on-girder-type superstructure, the screed elevations should be provided in accordance with Section 61-4.02(01). For a simple span or a continuous-spans reinforced-concrete slab superstructure, a dead-load deflection diagram showing the quarter-point deflections should be provided on the plans. The contractor uses this information to develop screed elevations that will enable it to pour the concrete slab at the proper final elevations. If a concrete-slab superstructure is located within a superelevation transition, or if other geometric complications are present, screed elevations are to be provided at 1.5-m intervals.

The following criteria should be used in developing a dead-load deflection diagram.

1. Compute dead-load deflections due to the weight of the concrete slab at the span quarter points or at a closer spacing if more accuracy is desired.
2. Compute instantaneous deflections by the usual methods using formulas for elastic deflections.
3. For determining deflections, use the gross moment of inertia and modulus of elasticity shown in Figure 62-1A.
4. Round off deflections values to the nearest 1 mm.
5. The deflection of the concrete slab caused by the weight of a concrete railing is insignificant and may be ignored when developing the slab dead-load deflection diagram.

6. Do not include the effects of form settlement or crushing. This is the contractor's responsibility.

62-3.03 Construction Joints

Transverse construction joints are not permitted. The INDOT *Standard Specifications* provide construction requirements where transverse construction joints are unavoidable if concrete placement is interrupted due to rain or other unavoidable event.

Longitudinal construction joints are also undesirable. However, the method of placing concrete, rate of delivery of concrete, and the type of finishing machine used by the contractor dictate whether or not a slab must be poured in one or more pours. An optional longitudinal keyway construction joint should be shown on the plans at the centerline of roadway. The contractor may request permission to eliminate the construction joint by providing information specific to the proposed method of placing concrete and equipment to be used.

Where phased construction is not anticipated, transverse reinforcing steel may be lapped at the optional longitudinal construction joint. If the structure will be built in phases, show the entire lap splice for all transverse reinforcing steel on the side of the construction joint that will be poured last.

62-3.04 Longitudinal Edge Beam Design

Reference: Articles 5.14.4.1, 9.7.1.4, and 4.6.2.1.4

An edge beam must be provided along the each slab edge. Structurally-continuous barriers may only be considered effective for the service limit state, and not the strength or extreme-event limit state. An edge beam can be a thickened section or a more heavily-reinforced section composite with the slab. The width of the edge beam may be taken to be the width of the equivalent strip as specified in Article 4.6.2.1.4b.

62-3.05 Shrinkage and Temperature Reinforcement

Reference: Articles 5.6.2 and 5.10.8

Evaluating the redistribution of force effects as a result of shrinkage, temperature change, creep, and movements of supports is not necessary.

The required shrinkage and temperature reinforcement, as a function of slab thickness, is provided in Figure 62-3D.

62-3.06 Reinforcing Steel and Constructibility

The following practices for reinforcing-steel placement should be considered to improve the constructability.

1. The maximum reinforcing-bar size should be #36.
2. The minimum spacing of reinforcing bars should preferably be 150 mm.
3. Longitudinal steel should be detailed in a 2-bar alternating pattern, with one of the bars continuous through the slab. The maximum size difference should be two standard bar sizes.

Vertical steel, other than that required to keep the longitudinal negative-moment reinforcement floating, may not be required. *LRFD Specifications* Article 5.11.1.2 provides requirements for the portion of the longitudinal positive-moment reinforcement that must be extended to the next support point in excess of that required by the factored maximum moment diagram. Similarly, there is a more-stringent requirement addressing the location of the anchorage for the longitudinal negative-moment reinforcement.

62-3.07 Drainage Outlets

Reference: Article 2.6.6

Chapter Thirty-three discusses the hydrological and hydraulic analyses for a bridge deck. The following specifically applies.

1. Type of Inlet. Use the deck drains shown on the INDOT *Standard Drawings*. The deck drains are designed for a reinforced-concrete slab bridge only. The drain is a 150-mm PVC pipe set into the deck. The small deck drains have limited hydraulic capacity; therefore, the standard spacing is approximately 1800 mm. A 15-mm depression, which extends 300 mm transversely from the face of the curb, slightly increases the capacity. The PVC pipe must clear the bent-cap face by 600 mm.

2. Concrete-Railing Scuppers. Scuppers in a concrete railing are permitted only on a local public agency structure.

62-3.08 Distribution of Concrete Railing Dead Load

The dead load of the railing should be assumed to be distributed uniformly over the entire bridge width.

62-3.09 Distribution of Live Loads

Reference: Article 4.6.2.3

Section 60-3.02 discusses the application of vehicular live load. Section 61-2.03 discusses the longitudinal application of the Strip Method. The following specifically applies to the distribution of live loads.

1. For a continuous superstructure with variable span lengths, one equivalent strip width, E, should be developed using the shortest span length for the value of L_1. This strip width should be used for moments throughout the entire length of the bridge.

2. E is the transverse width of slab over which an axle unit is distributed.

3. Using *LRFD Specifications* Equation 4.6.2.3-3 for the reduction of moments in a skewed structure will not significantly change the reinforcing-steel requirements. Therefore, for simplicity of design, use of the reduction factor r is not required.

62-3.10 Shear Resistance

Reference: Article 5.14.4.1

The moment design in accordance with *LRFD Specifications* Article 4.6.2.3 may be considered satisfactory for shear.

62-3.11 Minimum Thickness of Slab

Reference: Article 2.5.2.6.3

The minimum slab thickness should be in accordance with *LRFD Specifications* Table 2.5.2.6.3-1. In using the equations in the *LRFD* Table, the assumptions are as follows.

1. S is the length of the longest span.
2. The calculated thickness includes the 15-mm sacrificial wearing surface.

3. The thickness used may be greater than the value obtained from the Table.
4. The thickness used may be less than the value obtained from the Table as long as the live-load deflection does not exceed the criteria shown in *LRFD* Article 2.5.2.6.2.

62-3.12 Development of Flexural Reinforcement

Reference: Article 5.11.1.2

LRFD Specifications Article 5.11.1.2 provides requirements for the portion of the longitudinal positive-moment reinforcement that must be extended beyond the centerline of support. Similarly, *LRFD* Article 5.11.1.2.3 addresses the location of the anchorage (embedment length) for the longitudinal negative-moment reinforcement.

62-3.13 Skewed Reinforced-Concrete Slab Bridge

For a skew angle of less than 45 deg, the transverse reinforcement is permitted to be parallel to the skew, providing for equal bar lengths. For a skew angle of 45 deg or greater, the transverse reinforcement should be placed perpendicular to the longitudinal reinforcement. This requirement concerns the direction of principal tensile stresses as they develop in a heavily-skewed structure and is intended to prevent excessive cracking.

Special slab superstructure design or modifications to the integral end supports are not required for a greatly-skewed or -curved structure. The requirements are based upon performance of relatively small span structures constructed to date. Such slab superstructures have included skews in excess of 50 deg and moderate curvatures. A significant deviation from successful past practice should be reviewed. See Figure 62-3C.

62-3.14 Design Requirements for Integral Bent Cap at Slab Superstructure

The following are the requirements for the design of an integral bent cap.

1. The standard pile-cap dimensions are a width of 750 mm and a depth of 450 mm plus the slab thickness.
2. For a skewed structure, the 750-mm width dimension is measured perpendicular to the skew.
3. All transverse reinforcement (stirrups) in the cap is placed perpendicular to the skew.
4. Minimum concrete cover for cap reinforcing steel is 50 mm.
5. Standard pile embedment into an end-bent or interior-bent cap is 300 mm.

6. Support bars and coping stirrup bars are used to provide support for the top steel in the slab. Stirrup bars should be placed parallel to the skew.
7. A 20-mm, half-round drip bead should be located under the deck, 150 mm in from the face of coping.

The following applies to the profile for the bottom of a bent cap.

1. Either a level or sloped profile can be easily formed.

2. The profile can be made level if the difference in top-of-slab elevations at the left and right copings, along the centerline of the bent cap, is 75 mm or less. For a difference greater than 75 mm, slope the bottom of the cap from coping to coping.

Figures 62-3E through 62-3H provide the typical practices for slab-superstructure cap detailing.

62-3.15 Transverse Shrinkage and Temperature Reinforcement in the Top of the Slab at the Bent Caps

Reference: Article 5.10.8.1

Article 5.10.8.1 states that reinforcement for shrinkage and temperature stresses should be provided near surfaces of concrete exposed to daily temperature changes. Top longitudinal cap flexural reinforcement cannot be considered effective reinforcement for transverse shrinkage and temperature stresses if this steel is located significantly below the surface of the concrete slab.

62-3.16 Fatigue-Limit State

Reference: Article 5.5.3

The fatigue-limit state does not control the area of steel required at the points of maximum moment. However, it may control at bar cut-off points. The stress range, f_f, must satisfy *LRFD* Equation 5.5.3.2-1, as follows:

$$f_f \leq 145 - 0.33 f_{\min} + 55\left(\frac{r}{h}\right)$$

The section properties should be based on a cracked section where the sum of the stresses due to unfactored permanent loads plus 1.5 times the fatigue load is tensile and exceeds $0.25\sqrt{f'_c}$. A section in a stress-reversal area should be analyzed as a doubly-reinforced section.

Concrete	Yield Strength, f_c' (MPa)	Modulus of Elasticity, E_c (MPa)	Modulus of Rupture, f_r (MPa)
Class C	28	25 400	3.334
Class A	24	23 520	3.086
Class B	21	22 000	2.887

Notes:

1. *Thermal coefficient of expansion = 10.8 x 10^{-6}/℃*
2. *Shrinkage coefficient = 0.0002 after 28 days*
   = 0.0005 after 1 year
3. *Normal weight concrete density = 2400 kg/m^3 for computing loads*
   = 2320 kg/m^3 for computing properties

MATERIAL PROPERTIES OF CONCRETE

Figure 62-1A

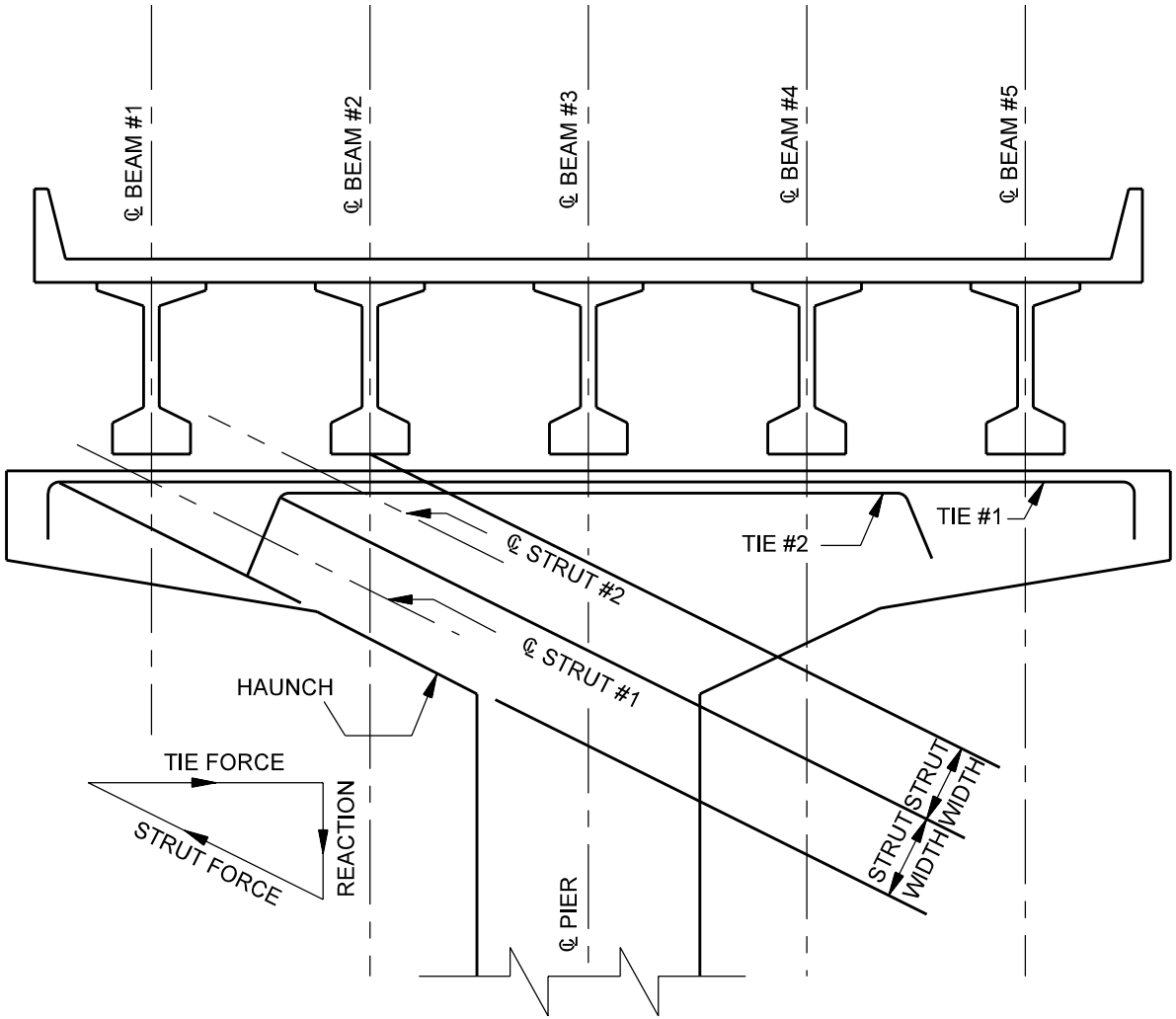

STRUT-AND-TIE MODEL FOR HAMMERHEAD PIER
Figure 62-1B

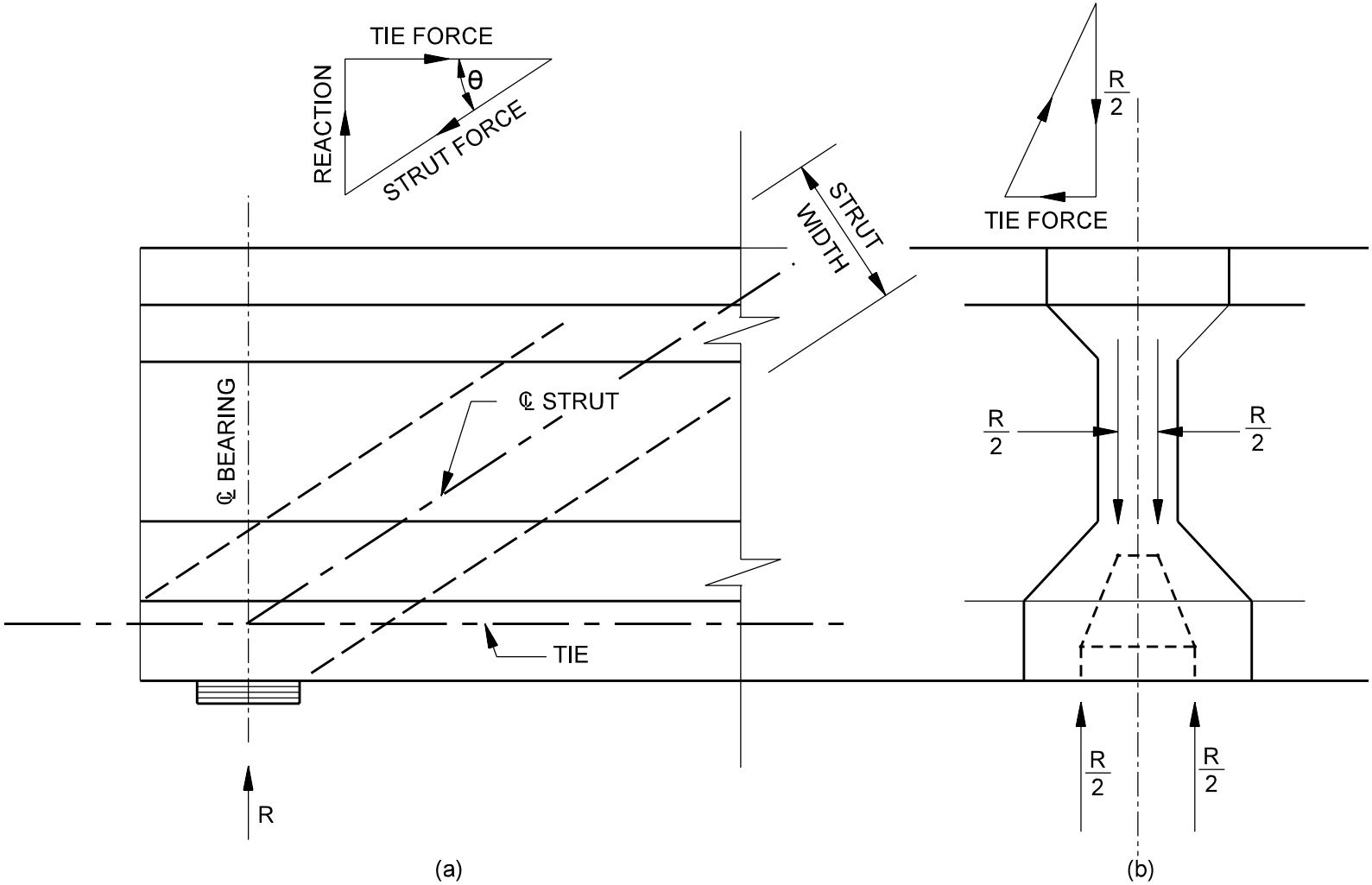

STRUT-AND-TIE MODEL FOR BEAM ENDS
Figure 62-1C

Bar Size Designation	Nominal Dimensions			Maximum Bar Length for Fabrication (mm)	Preferred Maximum Bar Length for Detailing (mm)
	Mass (kg/m)	Diameter (mm)	Area (mm^2)		
#10*	0.560	9.5	71		
#13*	0.994	12.7	129	11 000	9 000
#16	1.552	15.9	199	14 000	12 000
#19	2.235	19.1	284	14 000	12 000
#22	3.042	22.2	387	14 000	12 000
#25	3.973	25.4	510	14 000	12 000
#29	5.060	28.7	645	14 000	12 000
#32	6.404	32.3	819	14 000	12 000
#36	7.907	35.8	1006	14 000	12 000
#43	11.38	43.0	1452	14 000	12 000
#57	20.24	57.3	2581	14 000	12 000

**Maximum bar length does not apply to spiral bars.*

REINFORCING BAR SIZES

Figure 62-2A

		Bar Spacing (mm)																		
Bar Size	Area	100	110	120	130	140	150	160	170	180	190	200	225	250	275	300	325	350	400	450
#10	71	710	645	592	546	507	473	444	418	394	374	355	316	284	258	237	218	203	178	158
#13	129	1290	1173	1075	992	921	860	806	759	717	679	645	573	516	469	430	397	369	323	287
#16	199	1990	1809	1658	1531	1421	1327	1244	1171	1106	1047	995	884	796	724	663	612	569	498	442
#19	284	2840	2582	2367	2185	2029	1893	1775	1671	1578	1495	1420	1262	1136	1033	947	874	811	710	631
#22	387	3870	3518	3225	2977	2764	2580	2419	2276	2150	2037	1935	1720	1548	1407	1290	1191	1106	968	860
#25	510	5100	4636	4250	3923	3643	3400	3188	3000	2833	2684	2550	2267	2040	1855	1700	1569	1457	1275	1133
#29	645	6450	5864	5375	4962	4607	4300	4031	3794	3583	3395	3225	2867	2580	2345	2150	1985	1843	1613	1433
#32	819	8190	7445	6825	6300	5850	5460	5119	4818	4550	4311	4095	3640	3276	2978	2730	2520	2340	2048	1820
#36	1006	10060	9145	8383	7738	7186	6707	6288	5918	5589	5295	5030	4471	4024	3658	3353	3095	2874	2515	2236
#43	1452		13200	12100	11169	10371	9680	9075	8541	8067	7642	7260	6453	5808	5280	4840	4468	4149	3630	3227
#57	2581						17207	16131	15182	14339	13584	12905	11471	10324	9385	8603	7942	7374	6453	5736

REINFORCING BARS
Areas (mm^2) Per One Meter Section

Figure 62-2B

Item	Cover (mm)
Deck or Reinforced Concrete Slab:	
Top Steel	65
Bottom Steel (≤ #36 bar)	25
Footing:	
General	75
Bottom Steel	100
Columns, Ties, and Stirrups	40
All Other Structural Elements	50

MINIMUM CONCRETE COVER FOR DESIGN AND DETAILING

Figure 62-2C

Bar Size	Minimum Center-to-Center Spacing (mm)	
	Unspliced Bars	Spliced Bars
#10	50	60
#13	55	65
#16	55	70
#19	60	80
#22	60	85
#25	65	90
#29	75	105
#32	85	115
#36	90	130
#43	110	N/A
#57	145	N/A

Note: Minimum spacing values, rounded up to the nearest 5 mm, to be based on Articles 5.10.3.1.1 and 5.10.3.1.4 in the LRFD Specifications and the nominal diameters of metric reinforcing bars. The maximum size of coarse aggregate used in both cast-in-place and precast concrete is 25 mm.

MINIMUM CENTER-TO-CENTER SPACING OF BARS

Figure 62-2D

Bar Size	Area	Top Bars (1)	Others (2)	Top Bars (3)	Others (4)
#10	71	355	300	300	300
#13	129	460	330	370	300
#16	199	565	405	455	325
#19	284	730	525	585	420
#22	387	995	710	795	570
#25	510	1310	935	1050	750
#29	645	1655	1185	1325	950
#32	819	2105	1505	1685	1205
#36	1006	2585	1845	2065	1475
#43	1452	3210	2295	2570	1835
#57	2581	4365	3120	3490	2495

Notes:

(1) 1.4 x l_d

(2) l_d

(3) 1.4 x 0.8 x l_d

(4) 0.8 x l_d

5. All lengths are in millimeters, and are modified for ≥ 150 mm spacing and minimum 75 mm clear spacing between bars.
6. d_b < Cover; $2d_b$ < Clear Spacing
7. Values are for normal weight concrete.
8. Top bars are horizontal bars with more than 300 mm of fresh concrete below the reinforcement.

DEVELOPMENT LENGTHS FOR UNCOATED BARS IN TENSION
f_c' = 21 MPa

Figure 62-2E

Bar Size	Area	Top Bars (1)	Others (2)	Top Bars (3)	Others (4)
#10	71	355	300	300	300
#13	129	460	330	370	300
#16	199	565	405	455	325
#19	284	670	480	540	385
#22	387	860	615	690	495
#25	510	1135	810	910	650
#29	645	1435	1025	1150	820
#32	819	1820	1300	1460	1040
#36	1006	2240	1600	1790	1280
#43	1452	2780	1985	2225	1590
#57	2581	3780	2700	3025	2160

Notes:

(1) $1.4 \times l_d$

(2) l_d

(3) $1.4 \times 0.8 \times l_d$

(4) $0.8 \times l_d$

5. All lengths are in millimeters, and are modified for ≥ 150 mm spacing and minimum 75 mm clear spacing between bars.
6. d_b < Cover; $2d_b$ < Clear Spacing
7. Values are for normal weight concrete.
8. Top bars are horizontal bars with more than 300 mm of fresh concrete below the reinforcement.

DEVELOPMENT LENGTHS FOR UNCOATED BARS IN TENSION
f_c' = 28 MPa

Figure 62-2F

Bar Size	Area	Top Bars (1)	Others (2)	Top Bars (3)	Others (4)
#10	71	430	380	345	305
#13	129	560	495	450	395
#16	199	685	605	550	485
#19	284	885	785	710	625
#22	387	1210	1065	965	855
#25	510	1590	1405	1275	1125
#29	645	2010	1775	1610	1420
#32	819	2555	2255	2045	1805
#36	1006	3135	2770	2510	2215
#43	1452	3895	3440	3120	2750
#57	2581	5300	4675	4240	3740

Notes:

(1) 1.7 x l_d

(2) 1.5 x l_d

(3) 1.7 x 0.8 x l_d

(4) 1.5 x 0.8 x l_d

5. All lengths are in millimeters, and are modified for ≥ 150 mm spacing and minimum 75 mm clear spacing between bars.

6. d_b < Cover; $2d_b$ < Clear Spacing

7. Values are for normal weight concrete.

8. Top bars are horizontal bars with more than 300 mm of fresh concrete below the reinforcement.

DEVELOPMENT LENGTHS FOR EPOXY COATED BARS IN TENSION
f_c' = 21 MPa

Figure 62-2G

Bar Size	Area	Top Bars (1)	Others (2)	Top Bars (3)	Others (4)
#10	71	430	380	345	305
#13	129	560	495	450	395
#16	199	685	605	550	485
#19	284	815	720	655	575
#22	387	1045	925	840	740
#25	510	1380	1215	1105	975
#29	645	1745	1540	1395	1230
#32	819	2210	1950	1770	1560
#36	1006	2715	2395	2175	1920
#43	1452	3375	2980	2700	2385
#57	2581	4590	4050	3670	3240

Notes:

(1) $1.7 \times l_d$

(2) $1.5 \times l_d$

(3) $1.7 \times 0.8 \times l_d$

(4) $1.5 \times 0.8 \times l_d$

5. All lengths are in millimeters, and are modified for ≥ 150 mm spacing and minimum 75 mm clear spacing between bars.

6. d_b < Cover; $2d_b$ < Clear Spacing

7. Values are for normal weight concrete.

8. Top bars are horizontal bars with more than 300 mm of fresh concrete below the reinforcement.

DEVELOPMENT LENGTHS FOR EPOXY COATED BARS IN TENSION
f_c' = 28 MPa

Figure 62-2H

Bar Size	l_{dh} Side Cover < 64 mm, or Cover on Tail < 50 mm. $l_{dh} = l_{hb}$ (mm)	l_{dh} Side Cover ≥ 64 mm, or Cover on Tail ≥ 50 mm. $l_{dh} = 0.7\ l_{hb}$ (mm)
#10	220	155
#13	285	200
#16	350	245
#19	415	290
#22	480	340
#25	550	385
#29	635	445
#32	700	490
#36	790	550
#43	940	940*
#57	1245	1245*

* $l_{dh} = l_{hb}$

HOOKED UNCOATED BAR DEVELOPMENT LENGTHS
f_c' = 21 MPa

Figure 62-2 I

Bar Size	l_{dh} Side Cover < 64 mm, or Cover on Tail < 50 mm. $l_{dh} = l_{hb}$ (mm)	l_{dh} Side Cover ≥ 64 mm, or Cover on Tail ≥ 50 mm. $l_{dh} = 0.7\ l_{hb}$ (mm)
#10	190	150
#13	250	175
#16	305	215
#19	360	255
#22	420	295
#25	475	335
#29	550	385
#32	605	425
#36	680	480
#43	815	815*
#57	1080	1080*

* $l_{dh} = l_{hb}$

HOOKED UNCOATED BAR DEVELOPMENT LENGTHS
f_c' = 28 MPa

Figure 62-2J

Bar Size	l_{dh} Side Cover < 64 mm, or Cover on Tail < 50 mm. $l_{dh} = l_{hb}$ (mm)	l_{dh} Side Cover ≥ 64 mm, or Cover on Tail ≥ 50 mm. $l_{dh} = 0.7\ l_{hb}$ (mm)
#10	265	185
#13	340	240
#16	420	295
#19	500	350
#22	580	405
#25	655	460
#29	760	535
#32	840	590
#36	945	660
#43	1130	1130*
#57	1495	1495*

* $l_{dh} = l_{hb}$

HOOKED EPOXY COATED BAR DEVELOPMENT LENGTHS
f_c' = 21 MPa

Figure 62-2K

Bar Size	l_{dh} Side Cover < 64 mm, or Cover on Tail < 50 mm. $l_{dh} = l_{hb}$ (mm)	l_{dh} Side Cover ≥ 64 mm, or Cover on Tail ≥ 50 mm. $l_{dh} = 0.7\ l_{hb}$ (mm)
#10	230	160
#13	295	210
#16	365	255
#19	435	305
#22	500	350
#25	570	400
#29	660	460
#32	730	510
#36	820	575
#43	975	975*
#57	1295	1295*

* $l_{dh} = l_{hb}$

HOOKED EPOXY COATED BAR DEVELOPMENT LENGTHS
f_c' = 28 MPa

Figure 62-2L

Bar Size	Center to Center Spacing < 150 mm, or Cover < 75 mm		Center to Center Spacing ≥ 150 mm, or Cover ≥ 75 mm	
	Top Bars	Others	Top Bars	Others
#10	355	300	300	300
#13	460	330	370	300
#16	565	405	455	325
#19	730	525	585	420
#22	995	710	795	570
#25	1310	935	1050	750
#29	1655	1185	1325	950
#32	2105	1505	1685	1205
#36	2585	1845	2065	1475

Notes:

1. All splice lengths in millimeters.
2. d_b < Cover
3. $2d_b$ < Clear Spacing
4. Values are for normal weight concrete.

CLASS A SPLICE LENGTHS FOR UNCOATED BARS IN TENSION
f_c' = 21 MPa

Figure 62-2M

Bar Size	Center to Center Spacing < 150 mm, or Cover < 75 mm		Center to Center Spacing ≥ 150 mm, or Cover ≥ 75 mm	
	Top Bars	Others	Top Bars	Others
#10	355	300	300	300
#13	460	330	370	300
#16	565	405	455	325
#19	670	480	540	385
#22	860	615	690	495
#25	1135	810	910	650
#29	1435	1025	1150	820
#32	1820	1300	1460	1040
#36	2240	1600	1790	1280

Notes:

1. All splice lengths in millimeters.
2. d_b < Cover
3. $2d_b$ < Clear Spacing
4. Values are for normal weight concrete.

CLASS A SPLICE LENGTHS FOR UNCOATED BARS IN TENSION
f_c' = 28 MPa

Figure 62-2N

Bar Size	Center to Center Spacing < 150 mm, or Cover < 75 mm		Center to Center Spacing ≥ 150 mm, or Cover ≥ 75 mm	
	Top Bars	Others	Top Bars	Others
#10	430	380	345	305
#13	560	495	450	395
#16	685	605	550	485
#19	885	785	710	625
#22	1210	1065	965	855
#25	1590	1405	1275	1125
#29	2010	1775	1610	1420
#32	2555	2255	2045	1805
#36	3135	2770	2510	2215

Notes:

1. All splice lengths in millimeters.
2. $d_b \leq$ Cover $< 3d_b$
3. $2d_b \leq$ Clear Spacing $< 6d_b$
4. Values are for normal weight concrete.

CLASS A SPLICE LENGTHS FOR EPOXY COATED BARS IN TENSION
f_c' = 21 MPa

Figure 62-2 O

Bar Size	Center to Center Spacing < 150 mm, or Cover < 75 mm		Center to Center Spacing ≥ 150 mm, or Cover ≥ 75 mm	
	Top Bars	Others	Top Bars	Others
#10	430	380	345	305
#13	560	495	450	395
#16	685	605	550	485
#19	815	720	655	575
#22	1045	925	840	740
#25	1380	1215	1105	975
#29	1745	1540	1395	1230
#32	2210	1950	1770	1560
#36	2715	2395	2175	1920

Notes:

1. All splice lengths in millimeters.
2. $d_b \leq$ Cover $< 3d_b$
3. $2d_b \leq$ Clear Spacing $< 6d_b$
4. Values are for normal weight concrete.

CLASS A SPLICE LENGTHS FOR EPOXY COATED BARS IN TENSION
f_c' = 28 MPa

Figure 62-2P

Bar Size	Center to Center Spacing < 150 mm, or Cover < 75 mm		Center to Center Spacing ≥ 150 mm, or Cover ≥ 75 mm	
	Top Bars	Others	Top Bars	Others
#10	460	390	370	315
#13	600	430	480	345
#16	735	525	590	420
#19	950	680	760	545
#22	1295	925	1035	740
#25	1705	1215	1365	975
#29	2155	1540	1725	1230
#32	2735	1955	2190	1565
#36	3360	2400	2685	1920

Notes:

1. All splice lengths in millimeters.
2. d_b < Cover
3. $2d_b$ < Clear Spacing
4. Values are for normal weight concrete.

CLASS B SPLICE LENGTHS FOR UNCOATED BARS IN TENSION
f_c' = 21 MPa

Figure 62-2Q

Bar Size	Center to Center Spacing < 150 mm, or Cover < 75 mm		Center to Center Spacing ≥ 150 mm, or Cover ≥ 75 mm	
	Top Bars	Others	Top Bars	Others
#10	460	390	370	315
#13	600	430	480	345
#16	735	525	590	420
#19	875	625	700	500
#22	1120	800	895	640
#25	1475	1055	1180	845
#29	1865	1335	1495	1065
#32	2370	1690	1895	1355
#36	2910	2080	2325	1665

Notes:

1. All splice lengths in millimeters.
2. d_b < Cover
3. $2d_b$ < Clear Spacing
3. Values are for normal weight concrete.

CLASS B SPLICE LENGTHS FOR UNCOATED BARS IN TENSION
f_c' = 28 MPa

Figure 62-2R

Bar Size	Center to Center Spacing < 150 mm, or Cover < 75 mm		Center to Center Spacing ≥ 150 mm, or Cover ≥ 75 mm	
	Top Bars	Others	Top Bars	Others
#10	560	495	450	395
#13	725	640	580	515
#16	895	790	715	630
#19	1150	1015	920	815
#22	1570	1385	1255	1110
#25	2070	1825	1655	1460
#29	2615	2305	2090	1845
#32	3320	2930	2655	2345
#36	4075	3600	3260	2880

Notes:

1. All splice lengths in millimeters.
2. $d_b \leq$ Cover $< 3d_b$
3. $2d_b \leq$ Clear Spacing $< 6d_b$
3. Values are for normal weight concrete.

CLASS B SPLICE LENGTHS FOR EPOXY COATED BARS IN TENSION
f_c' = 21 MPa

Figure 62-2S

Bar Size	Center to Center Spacing < 150 mm, or Cover < 75 mm		Center to Center Spacing ≥ 150 mm, or Cover ≥ 75 mm	
	Top Bars	Others	Top Bars	Others
#10	560	495	450	395
#13	725	640	580	515
#16	895	790	715	630
#19	1060	935	850	750
#22	1360	1200	1090	960
#25	1790	1580	1435	1265
#29	2265	2000	1810	1600
#32	2875	2535	2300	2030
#36	3530	3115	2825	2495

Notes:

1. All splice lengths in millimeters.
2. $d_b \leq$ Cover $< 3d_b$
3. $2d_b \leq$ Clear Spacing $< 6d_b$
3. Values are for normal weight concrete.

CLASS B SPLICE LENGTHS FOR EPOXY COATED BARS IN TENSION
f_c' = 28 MPa

Figure 62-2T

Bar Size	Center to Center Spacing < 150 mm, or Cover < 75 mm		Center to Center Spacing ≥ 150 mm, or Cover ≥ 75 mm	
	Top Bars	Others	Top Bars	Others
#10	600	510	480	410
#13	780	560	625	450
#16	960	685	770	550
#19	1240	885	995	710
#22	1690	1210	1355	965
#25	2225	1590	1780	1275
#29	2815	2010	2255	1610
#32	3575	2555	2860	2045
#36	4390	3135	3515	2510

Notes:

1. All splice lengths in millimeters.
2. d_b < Cover
3. $2d_b$ < Clear Spacing
3. Values are for normal weight concrete.

CLASS C SPLICE LENGTHS FOR UNCOATED BARS IN TENSION
f_c' = 21 MPa

Figure 62-2U

Bar Size	Center to Center Spacing < 150 mm, or Cover < 75 mm		Center to Center Spacing ≥ 150 mm, or Cover ≥ 75 mm	
	Top Bars	Others	Top Bars	Others
#10	600	510	480	410
#13	780	560	625	450
#16	960	685	770	550
#19	1140	815	915	655
#22	1465	1045	1170	840
#25	1930	1380	1545	1105
#29	2440	1745	1950	1395
#32	3095	2210	2475	1770
#36	3805	2715	3045	2175

Notes:

1. All splice lengths in millimeters.
2. d_b < Cover
3. $2d_b$ < Clear Spacing
3. Values are for normal weight concrete.

CLASS C SPLICE LENGTHS FOR UNCOATED BARS IN TENSION
f_c' = 28 MPa

Figure 62-2V

Bar Size	Center to Center Spacing < 150 mm, or Cover < 75 mm		Center to Center Spacing ≥ 150 mm, or Cover ≥ 75 mm	
	Top Bars	Others	Top Bars	Others
#10	730	645	585	515
#13	950	835	760	670
#16	1165	1030	935	825
#19	1505	1330	1205	1065
#22	2050	1810	1640	1450
#25	2705	2385	2165	1910
#29	3420	3015	2735	2415
#32	4340	3830	3475	3065
#36	5330	4705	4265	3765

Notes:

1. All splice lengths in millimeters.
2. $d_b \leq$ Cover $< 3d_b$
3. $2d_b \leq$ Clear Spacing $< 6d_b$
3. Values are for normal weight concrete.

CLASS C SPLICE LENGTHS FOR EPOXY COATED BARS IN TENSION
f_c' = 21 MPa

Figure 62-2W

Bar Size	Center to Center Spacing < 150 mm, or Cover < 75 mm		Center to Center Spacing ≥ 150 mm, or Cover ≥ 75 mm	
	Top Bars	Others	Top Bars	Others
#10	730	645	585	515
#13	950	835	760	670
#16	1165	1030	935	825
#19	1385	1225	1110	980
#22	1775	1570	1420	1255
#25	2340	2065	1875	1655
#29	2960	2615	2370	2090
#32	3760	3315	3010	2655
#36	4615	4075	3695	3260

Notes:

1. All splice lengths in millimeters.
2. $d_b \leq$ Cover $< 3d_b$
3. $2d_b \leq$ Clear Spacing $< 6d_b$
3. Values are for normal weight concrete.

CLASS C SPLICE LENGTHS FOR EPOXY COATED BARS IN TENSION
f_c' = 28 MPa

Figure 62-2X

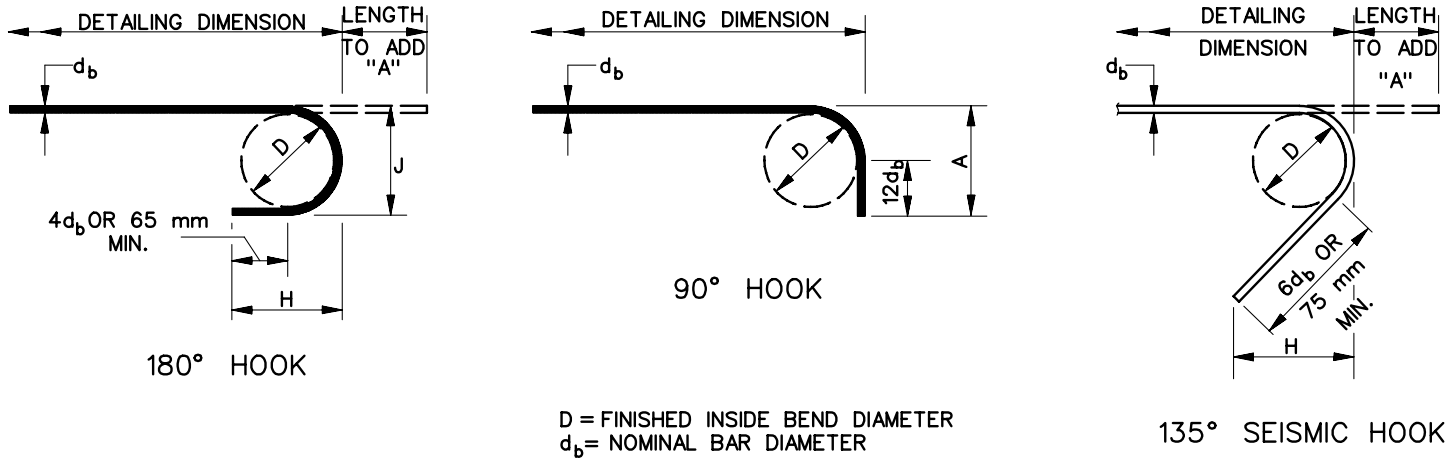

RECOMMENDED END HOOKS, ALL GRADES					
BAR SIZE	D	180° HOOKS			90°HOOKS
		A	J	H	A
#10	50	125	80	105	150
#13	80	150	105	120	200
#16	95	175	130	130	250
#19	115	200	155	155	300
#22	135	250	180	180	375
#25	155	275	205	205	425
#29	240	375	300	265	475
#32	275	425	335	290	550
#36	305	475	375	325	600
#43	465	675	550	430	775
#57	610	925	725	570	1050

SEISMIC TIE HOOKS			
BAR SIZE	135° SEISMIC HOOK		
	D	A	H
#10	40	110	80
#13	50	115	90
#16	65	140	95
#19	115	205	115
#22	135	230	155
#25	155	270	155

Notes:

1. *All dimensions are in millimeters (mm).*
2. *Show detailing dimension and total length of bent bar on the bending diagram in the plans. Do not show length to add (dimension "A") for 180° hooks or 135° seismic hooks. Do not show bend diameter unless it is not standard.*
3. *In computing total length of a bent bar with 90° hooks, do not deduct for bends.*

HOOKS AND BENDS

Figure 62-2Y

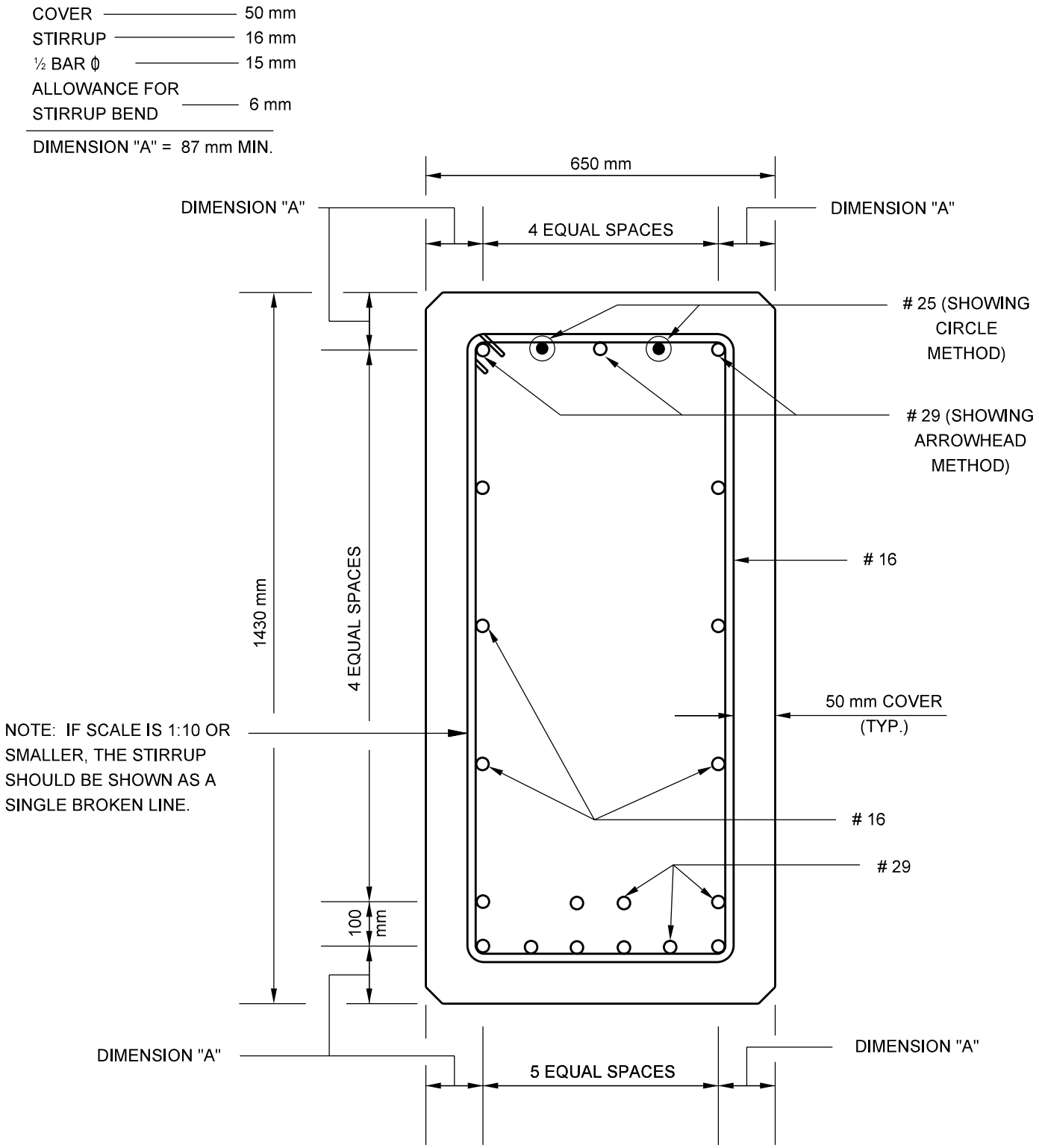

BARS IN SECTION
Figure 62-2Z

EXAMPLE NO. 1

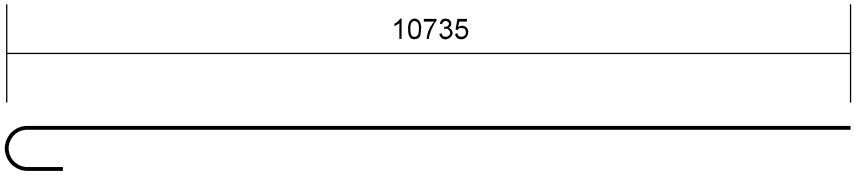

10 735
275 (180° HOOK)
11 010 ≈ 11 020

2502c X 11020

EXAMPLE NO. 2

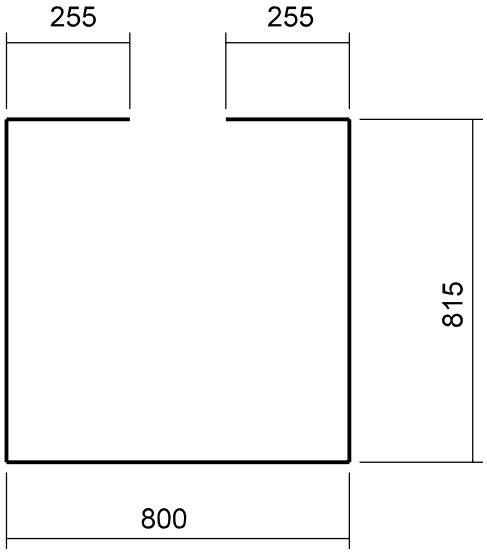

815
815
800
250 (90° HOOK)
250 (90° HOOK)
2930 ≈ 2940

1602c X 2940

BENDING DIAGRAM EXAMPLES
Figure 62-2AA

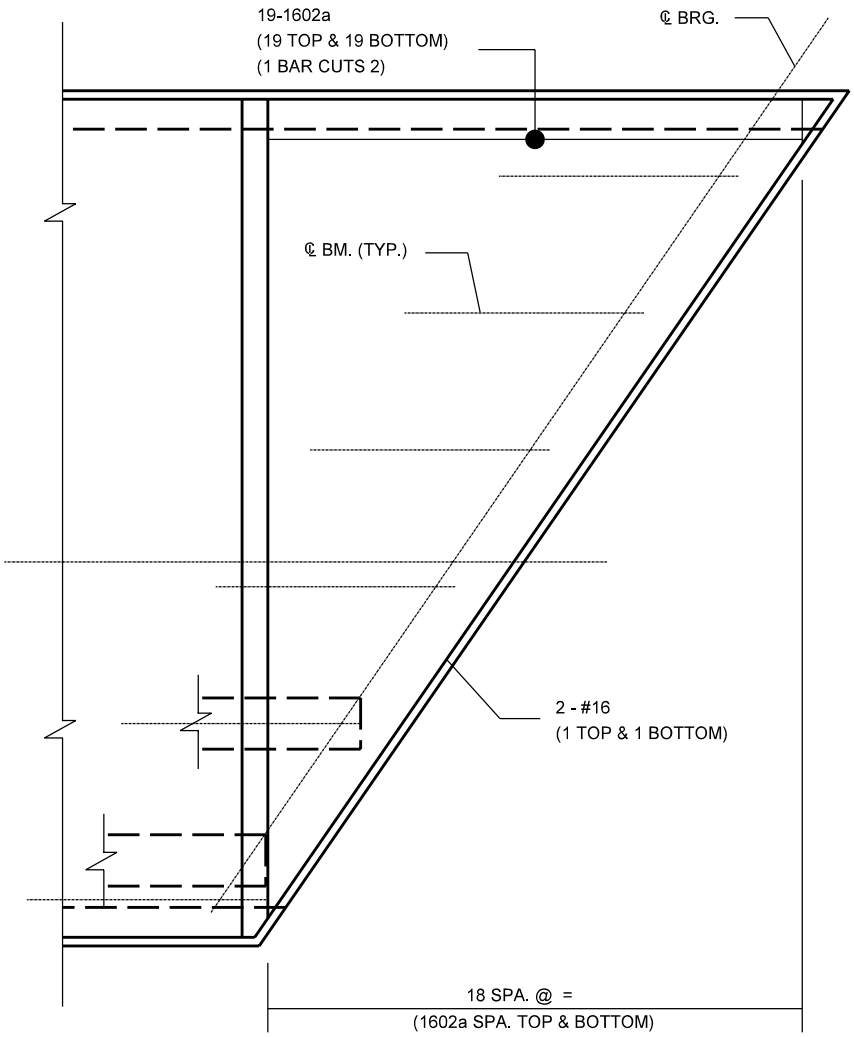

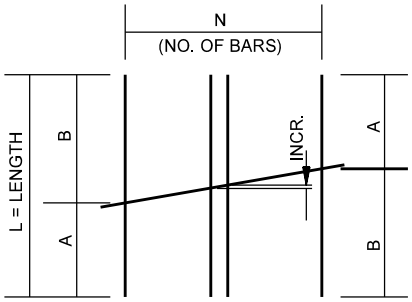

CUTTING DIAGRAM
(1 BAR CUTS 2)
1602a X L

CUTTING DIAGRAM
(Transverse Steel in Bridge Deck)
Figure 62-2BB

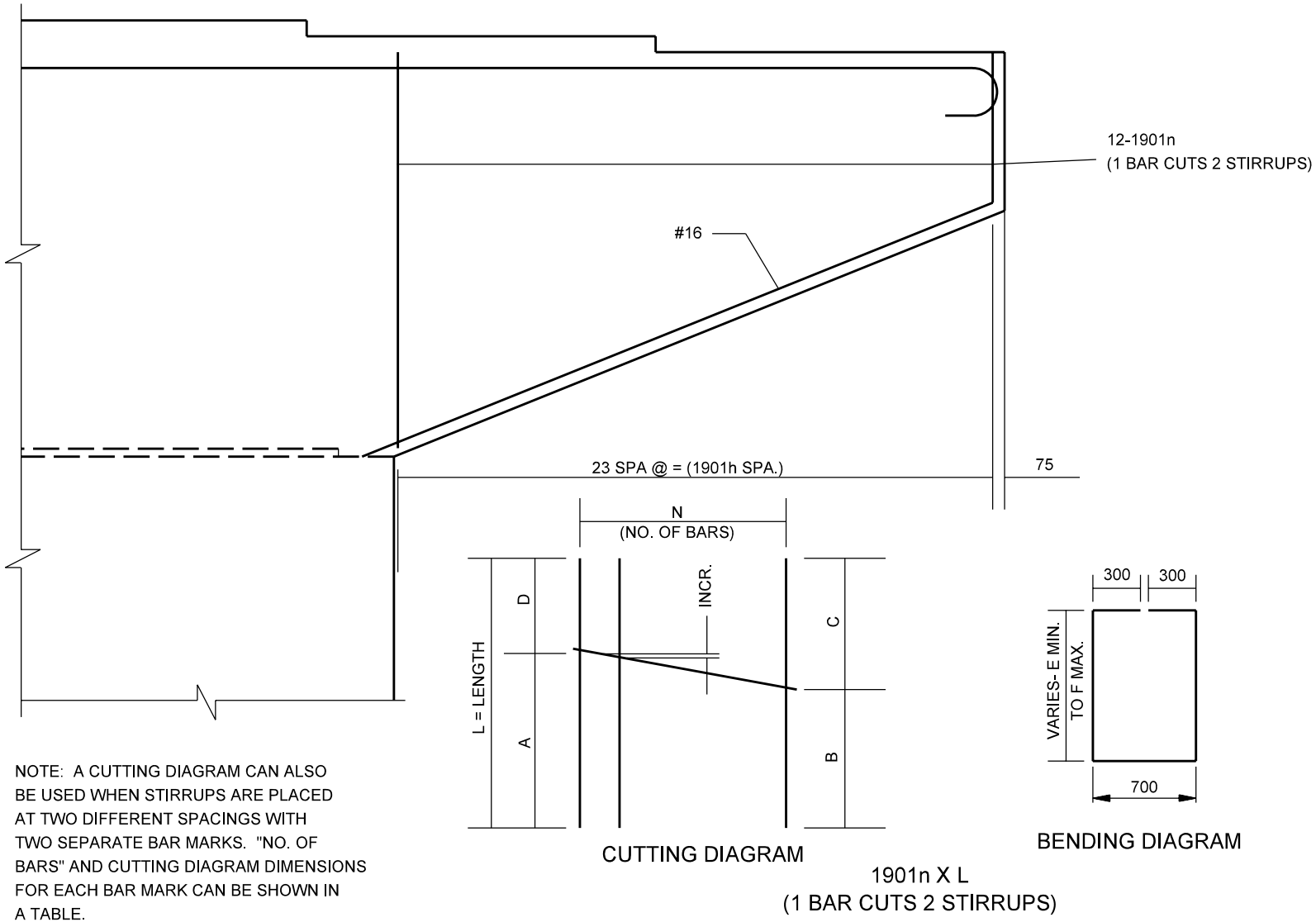

NOTE: A CUTTING DIAGRAM CAN ALSO BE USED WHEN STIRRUPS ARE PLACED AT TWO DIFFERENT SPACINGS WITH TWO SEPARATE BAR MARKS. "NO. OF BARS" AND CUTTING DIAGRAM DIMENSIONS FOR EACH BAR MARK CAN BE SHOWN IN A TABLE.

CUTTING DIAGRAM
(Hammerhead Stem Pier)
Figure 62-2CC

R.C. BRIDGE APPROACH
BILL OF MATERIALS

Plain Reinforcing Steel			
Size and Mark	No. of Bars	Length (mm)	Weight (kg)
1603	69	5960	
1691	144	6175	
#16	48	9300	
#16	54	8800	
#16	2	7800	
#16	1	7400	
#16	2	6600	
#16	1	6200	
#16	2	5500	
#16	49	5000	
#16	2	4300	
#16	1	3800	
#16	2	3100	
#16	1	2700	
#16	2	1900	
#16	1	1500	
Total No. 16			3953
1301	14	1080	
#13	2	5900	
Total No. 13			27
Total Plain Reinforcing Steel			3980
Epoxy Coated Reinforcing Steel			
#25	4	5900	94
#22	4	5900	72
1602	5	6040	
1681	51	2020	
1691a	31	1680	
1693	62	1260	
Total No. 16			409
Total Epoxy Coated Reinforcing Steel			575
Concrete			
Reinf. Conc. Bridge Appr., 375			274 m^2
Concrete Railing Class C			1.9 m^3

REINFORCED CONCRETE BRIDGE APPROACH BILL OF MATERIALS

Figure 62-2DD

Element	Minimum Concrete Cover
Top of Slab	65 mm*
Bottom of Slab	25 mm ($d_b \leq 36$ mm)
Ends of Slab	50 mm
Face of Copings	50 mm

** Includes a 15-mm sacrificial wearing surface.*

MINIMUM CONCRETE COVER
(Reinforced Concrete Slab Superstructure)

Figure 62-3A

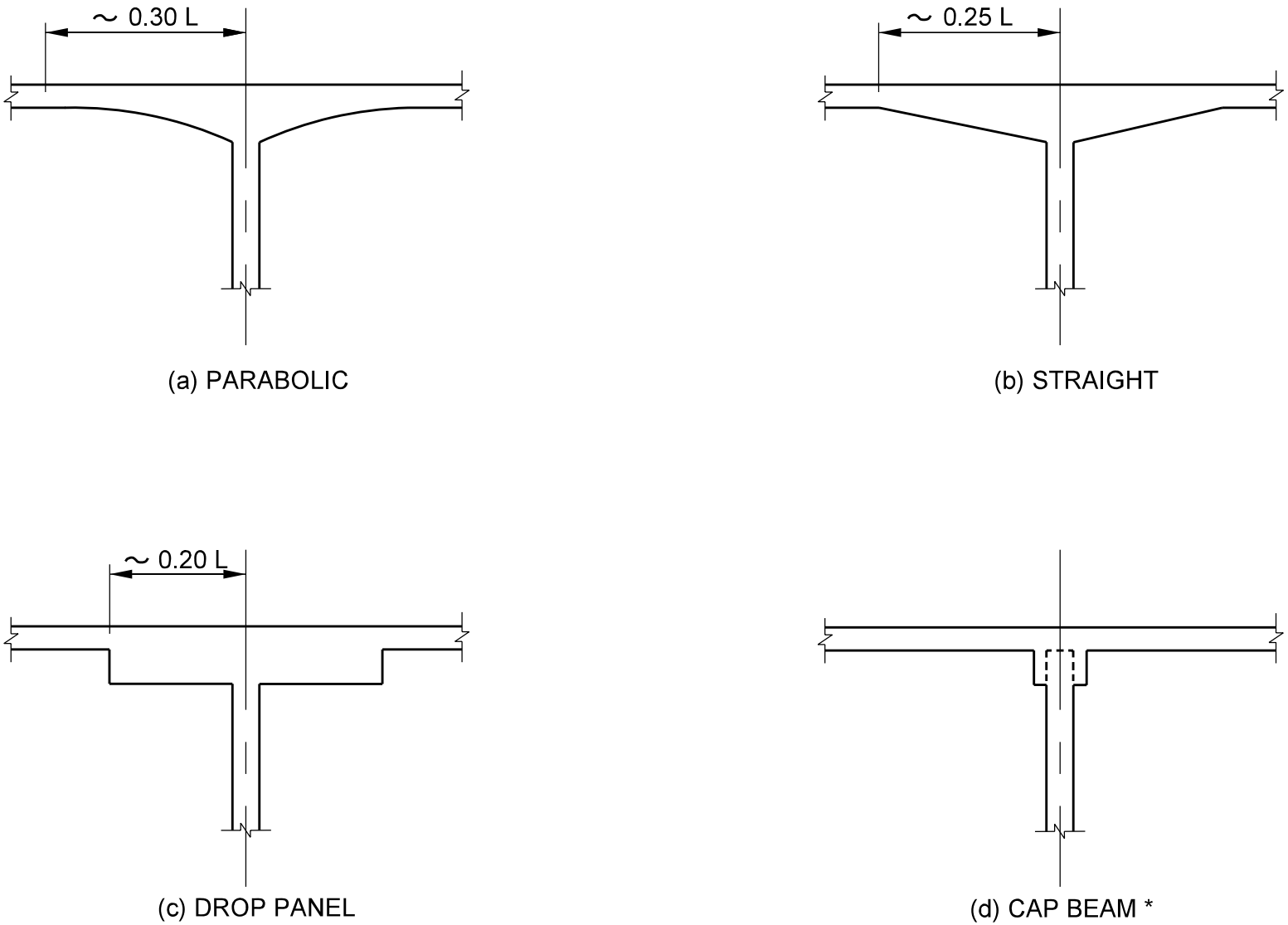

* THIS CONFIGURATION SHOULD NOT BE USED AS A STRUCTURAL HAUNCH

HAUNCH CONFIGURATIONS FOR REINFORCED CONCRETE SLAB SUPERTRUCTURES

Figure 62-3B

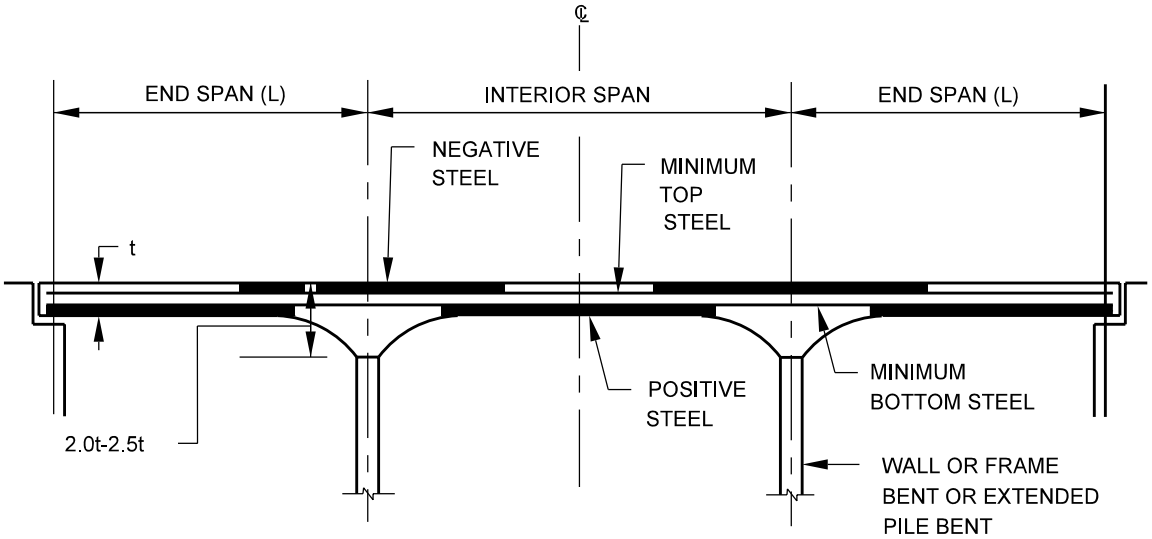

ELEVATION

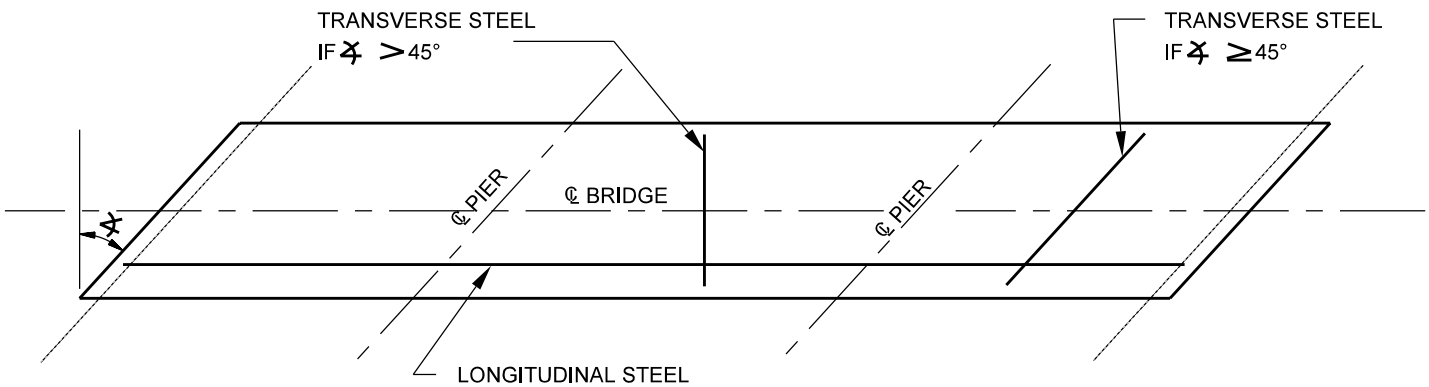

PLAN

RECTANGULAR, SKEWED AND/OR CURVED LAYOUT

TYPICAL REINFORCED CONCRETE SLAB SUPERSTRUCTURE

Figure 62-3C

Slab Thickness (mm)	Reinforcement (Top and Bottom)
< 450	#16 @ 450 mm or #13 @ 300 mm
450 ≤ Thick. ≤ 720	#16 @ 300 mm or #13 @ 200 mm
> 720	Design per *LRFD* Article 5.10.8.2

SHRINKAGE AND TEMPERATURE REINFORCEMENT FOR SLAB SUPERSTRUCTURE

Figure 62-3D

NOTE: ENTIRE TYPICAL SECTION TO BE DETAILED ON PLANS.

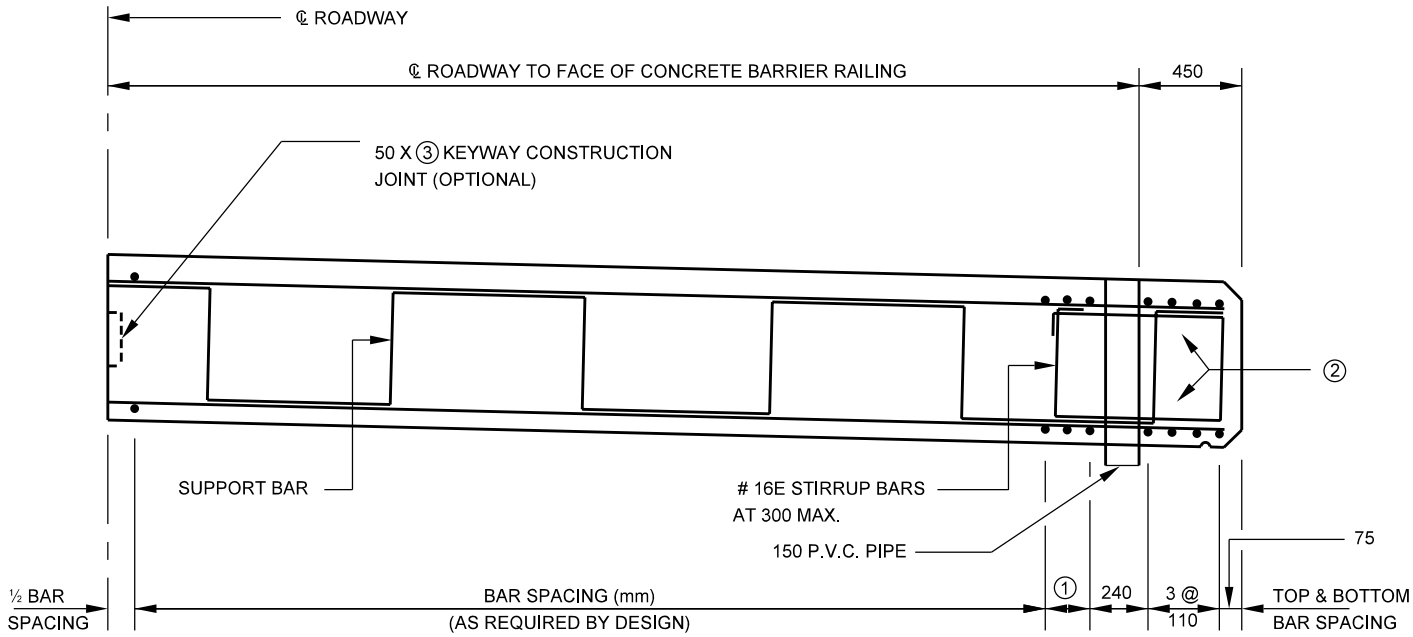

① BAR SPACING AND NUMBER OF SPACES TO BE DETERMINED TO FACILITATE A CONSTANT BAR SPACING IN REMAINDER OF SLAB.

② DESIGN EDGE BEAM IN ACCORDANCE WITH ARTICLES IN THE LRFD SPECIFICATIONS, BUT USE AS A MINIMUM THE SAME AREA OF STEEL PER METER AS IN SLAB.

③ FOR DEPTH OF KEYWAY, USE ONE-THIRD THE SLAB THICKNESS.

INTEGRAL CAPS AT SLAB SUPERSTRUCTURE
Figure 62-3E

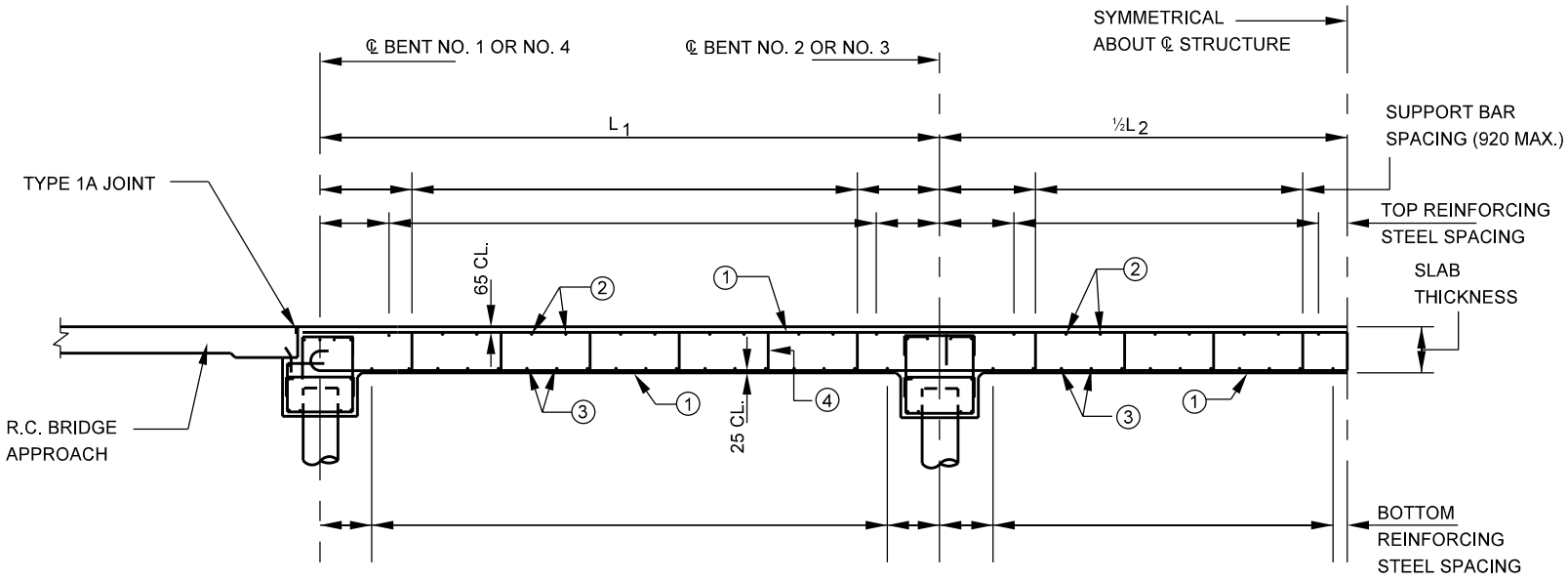

① LONGITUDINAL BARS AS REQUIRED FOR DESIGN.

② SHRINKAGE AND TEMPERATURE REINFORCEMENT (SEE FIGURE 62-3D)

③ DISTRIBUTION REINFORCEMENT IN ACCORDANCE WITH LRFD ARTICLE 5.14.4.1.

④ SUPPORT BARS (MAX. SPACING 920 mm)

LONGITUDINAL STEEL BAR SIZE	SUPPORT BAR SIZE
# 19 OR 22	# 16
# 25	# 19
# 29	# 19
# 32 OR LARGER	# 22

INTEGRAL CAPS AT SLAB SUPERSTRUCTURE
(Half Longitudinal Section)
Figure 62-3F

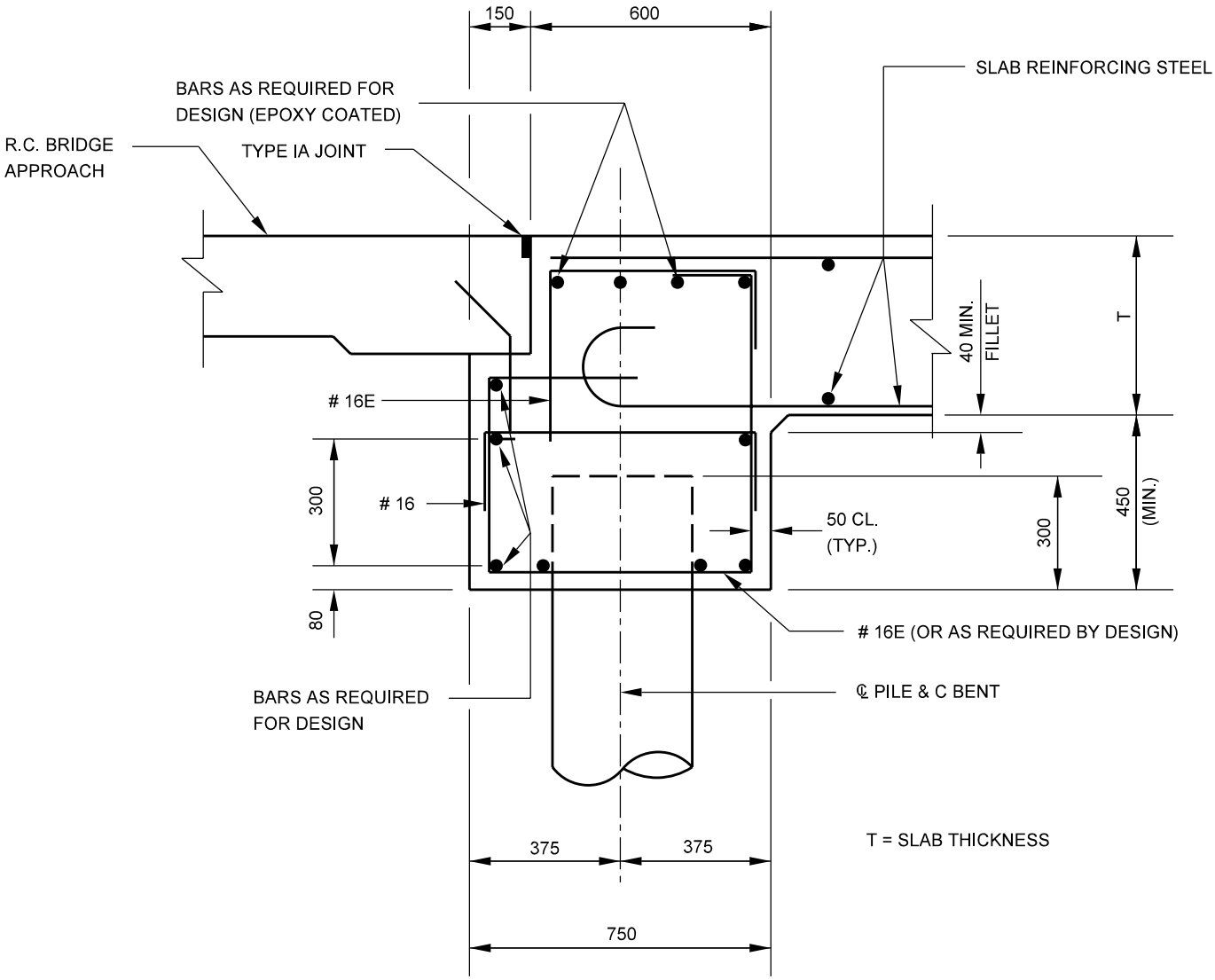

INTEGRAL CAPS AT SLAB SUPERSTRUCTURE
(Section Through End Bent)
Figure 62-3G

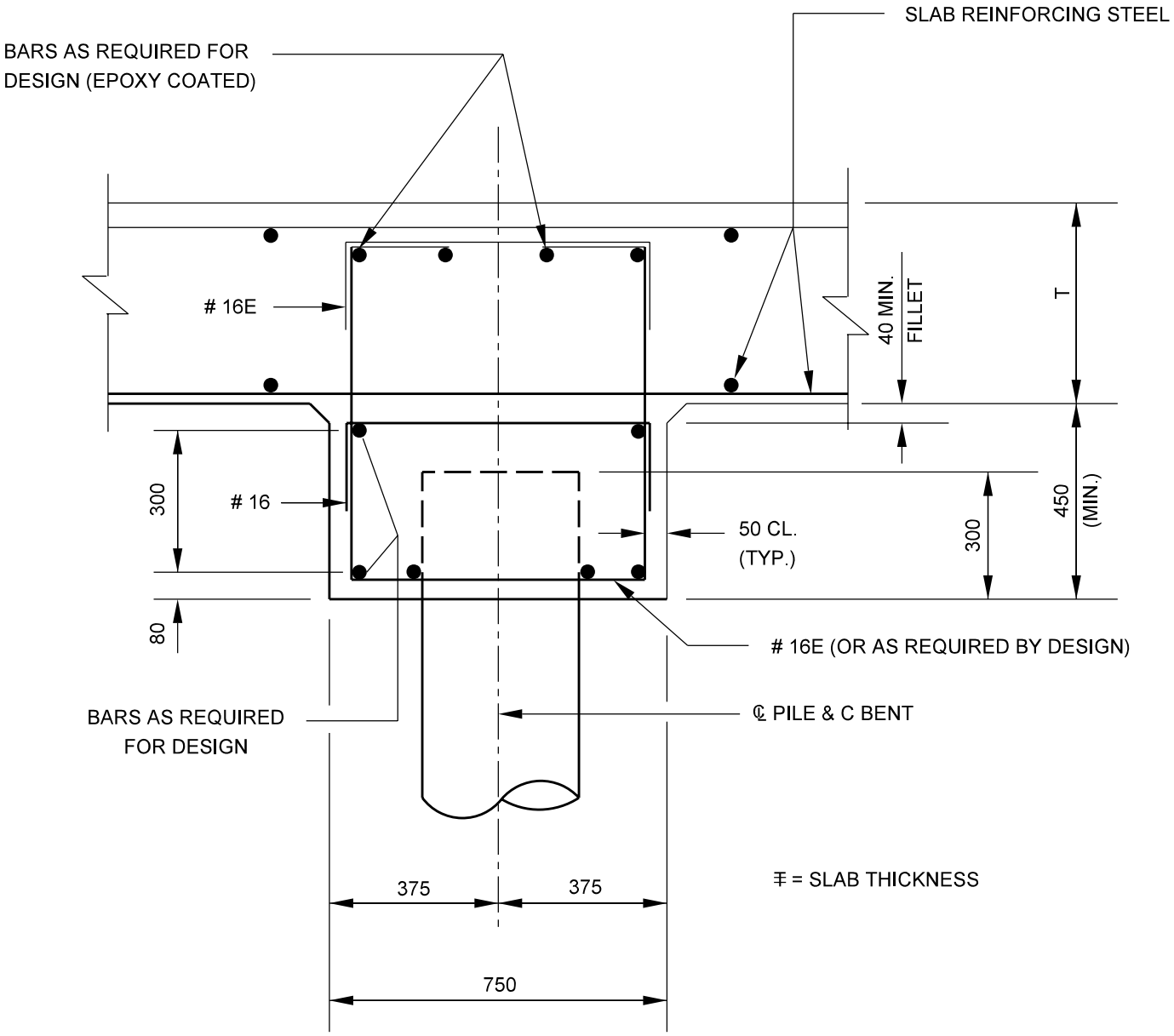

INTEGRAL CAPS AT SLAB SUPERSTRUCTURE
(Section Through Interior Bent)
Figure 62-3H