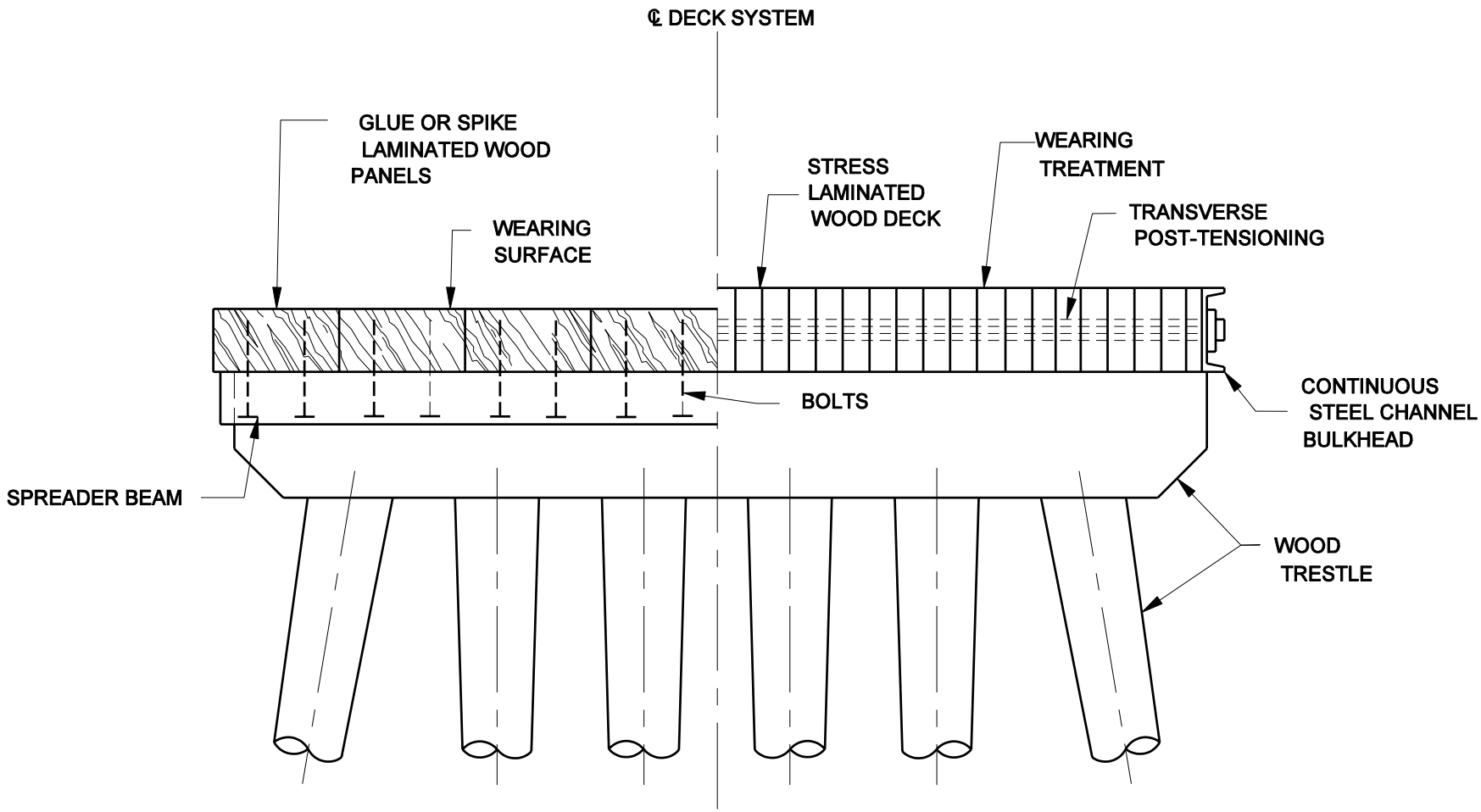

TYPICAL CROSS SECTION FOR LAMINATED WOOD DECKS
(Type L1 and L2)

Figure 59-3V