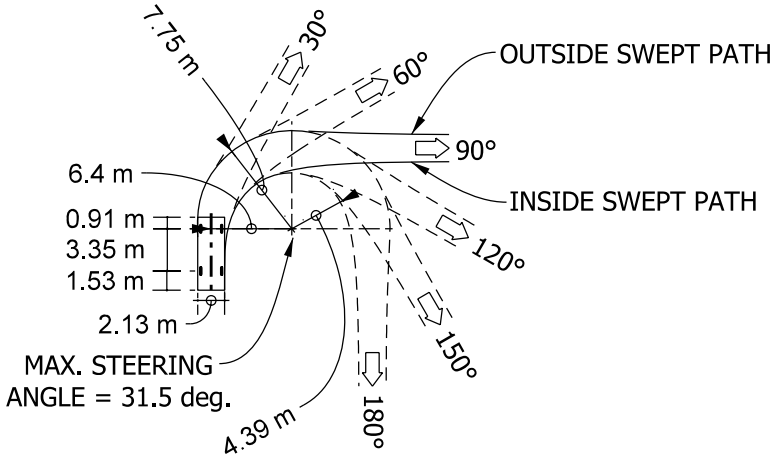

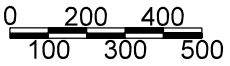

P - DESIGN VEHICLE
(1:500 SCALE)

Figure 46-12B