TABLE OF CONTENTS

TABLE OF CONTENTS 1
LIST OF FIGURES 3
45-1A Usable Shoulder Width 3
45-1A(1) Paved Shoulder Cross Slopes, Tangent Section, With Underdrains 3
45-1A(2) Paved Shoulder Cross Slopes, Tangent Section, Without Underdrains 3
45-1B Curb Parking Configurations 3
45-1C Desirable Street Widths With On-Street Parking 3
45-1D Curbing Types 3
45-2A Median Width Definitions 3
45-3A Typical Fill Slopes (Non-Curbed Facilities) 3
45-3B Typical Fill Slopes (Curbed Facilities) 3
45-3C Typical Cut Slopes (Non-Curbed Facilities) 3
45-3D Typical Cut Slopes (Curbed Facilities) 3
45-4A Taper Rates for Lane Reductions 3
45-5A Example of a Curved Alignment Transition (2-Lane Undivided to a 4-Lane Divided). 3
45-5B Split Transition (2-Lane Undivided to a 4-Lane Divided) 3
45-5C Split Transition (4-Lane Undivided to a 4-Lane Divided) 3
45-5D Two-Way Left-Turn Lane Transition 3
CHAPTER FORTY-FIVE 4
45-1.0 ROADWAY SECTION 4
45-1.01 Travel Lane 4
45-1.01(01) Width 4
45-1.01(02) Cross Slope 4
45-1.02 Shoulders or Curb Offsets 5
45-1.02(01) Definitions 5
45-1.02(02) Functions 6
45-1.02(03) Width 7
45-1.02(04) Surface Type 7
45-1.02(05) Cross Slope 7
45-1.02(06) Shoulder Corrugations 8
45-1.03 Auxiliary Lane 8
45-1.04 Parking Lane (On-Street) 8
45-1.05 Curbs 10
45-1.05(01) Warrants For a Curbed Section 11
45-1.05(02) Types 12
45-1.05(03) Curb-Type Selection 13
45-1.05(04) Design Considerations 13
45-1.06 Sidewalk 16
45-1.06(01) Guidelines for Sidewalk Warrant 16
45-1.06(02) Sidewalk-Design Criteria 18
45-2.0 MEDIAN 19
45-2.01 Median Width 19
45-2.02 Median Type 21
45-2.02(01) Flush Median 21

45-2.02(02) Raised Median 21
45-2.02(03) Depressed Median 23
45-3.0 ROADSIDE ELEMENTS 24
45-3.01 Fill Slope 24
45-3.02 Cut Slope 24
45-3.02(01) Slope Rate 24
45-3.02(02) Rock Cut (Backslope) 25
45-3.02(03) Material and Soils Conditions 25
45-3.02(04) Roadside Safety 25
45-3.02(05) Hydraulic Design 25
45-3.03 Reducing the Use of a 2:1 Slope 26
45-3.03(01) New-Construction or Reconstruction Project (4R) 26
45-3.03(02) 3R Project 27
45-4.0 BRIDGE OR UNDERPASS CROSS SECTION 27
45-4.01 Bridge 27
45-4.02 Underpass 30
45-5.0 CHANGE IN ROADWAY CROSS SECTION 30
45-6.0 RIGHT OF WAY 31
45-6.01 Definitions 31
45-6.02 Width 32
45-7.0 FRONTAGE ROAD 33
45-7.01 General 33
45-7.02 Functional Classification 34
45-7.03 Design 34
45-7.03(01) Design Elements 34
45-7.03(02) One-Way Versus Two-Way Operation 34
45-7.03(03) Outer Separation 35
45-7.03(04) Access 35
45-7.04 Design Considerations for Frontage-Road and Local-Road Intersection 36

LIST OF FIGURES

Figure **Title**

45-1A Usable Shoulder Width
45-1A(1) Paved Shoulder Cross Slopes, Tangent Section, With Underdrains
45-1A(2) Paved Shoulder Cross Slopes, Tangent Section, Without Underdrains
45-1B Curb Parking Configurations
45-1C Desirable Street Widths With On-Street Parking
45-1D Curbing Types
45-2A Median Width Definitions
45-3A Typical Fill Slopes (Non-Curbed Facilities)
45-3B Typical Fill Slopes (Curbed Facilities)
45-3C Typical Cut Slopes (Non-Curbed Facilities)
45-3D Typical Cut Slopes (Curbed Facilities)
45-4A Taper Rates for Lane Reductions
45-5A Example of a Curved Alignment Transition (2-Lane Undivided to a 4-Lane Divided)
45-5B Split Transition (2-Lane Undivided to a 4-Lane Divided)
45-5C Split Transition (4-Lane Undivided to a 4-Lane Divided)
45-5D Two-Way Left-Turn Lane Transition

CHAPTER FORTY-FIVE

CROSS-SECTION ELEMENTS

Chapter Fifty-three provides numerical criteria for various cross-section elements for a new-construction or reconstruction project. Chapters Fifty-four through Fifty-six provide criteria for cross-section elements for an existing highway. This Chapter provides additional guidance which should be considered in the design of each cross-section element. The designer should also review the typical cross sections provided in Section 45.8.0.

45-1.0 ROADWAY SECTION

45-1.01 Travel Lane

45-1.01(01) Width

Travel-lane width can vary from 2.7 m through 3.6 m, depending upon the functional classification, traffic volume, design speed, rural or urban location, and project scope of work. The tables in Chapters Fifty-three through Fifty-six provide specific criteria for travel-lane width for these various conditions.

45-1.01(02) Cross Slope

Surface cross slopes are required for the proper drainage of through travel lanes on a tangent section. This reduces the hazard of wet pavement by quickly removing water from the surface, and reduces the likelihood of ponding. On a State highway, the following will apply for a tangent roadway section.

1. 2-Lane Highway. The travelway lane pavement should be crowned at the centerline with a cross slope of 2% sloping away from the center.

2. Divided Facility. For two lanes in each direction, each roadway is crowned at the centerline with a cross slope of 2% sloping away from the center. For three or more lanes in each direction, the following will apply.

    a. Three-Lane Section (New Construction or Reconstruction). The pavement is

crowned along the lane edge between the center lane and the lane adjacent to the median, with the right two lanes sloping to the outside. The travel-lanes cross slopes should be 2%.

b. Three-Lane Section (Adding Lanes to Existing Facility). When adding new lanes either in the median or on the outside, the existing roadway crown is maintained. The added-travel-lane cross slope direction and rate will be the same as that of the adjacent travel lane. Where three lanes are sloped in the same direction, the third lane should be sloped at 3%.

c. Four-Lane Section. The travelway pavement should be crowned at the one-way-roadway centerline (i.e., two lanes on each side) with a cross slope of 2% sloping away from the center. Where three or more lanes are sloped in the same direction, the third and fourth lanes should be sloped at 3%.

d. Existing. For a roadway with 2-lanes sloped in one direction, increase the overlay depth by 75 mm on the inside edge to achieve a uniform 2% cross slope downward across both travelway lanes. For three lanes sloped in one direction, use a 3% cross slope for the outside lane. If the additional lane is to be added in the median, it should be sloped at 2% toward the median.

3. Bridge. For a new or reconstructed bridge, the cross slope will be 2% sloping away from the crown and will apply to the entire width from the crown to the face of the railing or curb. The crown across the bridge will be in the same location as the approaching roadway. An existing bridge to remain in place may retain an existing cross slope of 1.5%.

For a non-State highway, the travel-lanes cross slopes will vary depending upon the pavement surface and local practices. For a paved surface, the cross slope should be the same as for a State highway (2%). For a non-State facility with an aggregate surface, the cross slope should be 6%.

45-1.02 Shoulders or Curb Offsets

45-1.02(01) Definitions

The following definitions apply.

1. Shoulder. The portion of the roadway contiguous with the traveled way for accommodation of a stopped vehicle, for emergency use, or for lateral support of subbase, base, and surface courses.

2. Usable-Shoulder Width. The width of the shoulder that can be used by a driver for emergency parking or stopping. Figure 45-1A illustrates the definition of usable-shoulder width.

3. Effective Usable-Shoulder Width. This width is equal to the usable-shoulder width minus 0.3 m. However, the effective usable-shoulder width cannot be less than the required paved-shoulder width.

4. Curb Offset. The term is used to define the distance between the edge of the travel lane and the face of curb.

45-1.02(02) Functions

A shoulder serves many functions. The wider the shoulder, the greater the benefits, including the following:

1. providing structural lateral support for the travelway;

2. increasing highway capacity;

3. encouraging uniform travel speed;

4. providing space for emergency or discretionary stops;

5. improving roadside safety by providing more recovery area for a run-off-the-road vehicle;

6. providing a sense of openness;

7. improving sight distance around a horizontal curve;

8. enhancing highway aesthetics;

9. facilitating maintenance operations (e.g., snow storage);

10. providing additional lateral clearance to a roadside appurtenance (e.g., guardrail, traffic signal);

11. facilitating pavement drainage;

12. providing space for pedestrian and bicycle use; and

13. providing space for a bus stop.

45-1.02(03) Width

Shoulder width will vary according to functional classification, traffic volume, urban or rural location, curbed or uncurbed facility, and project scope of work. The figures in Chapters Fifty-three through Fifty-six provide the paved- and usable-shoulder width criteria for these conditions. See Section 49-5.0 for shoulder width where guardrail is required.

45-1.02(04) Surface Type

For a new or reconstruction project on a State highway, the shoulder will be paved with asphalt or concrete. On a 3R or partial 3R project on a State highway, the shoulder should be paved. However, a sealed-aggregate shoulder may be appropriate. For a non-State highway, the shoulder should be paved. However, a sealed-aggregate or earth surface is acceptable.

45-1.02(05) Cross Slope

The cross slope of the shoulder varies according to the shoulder type and width. It should be the same across the full width of the usable shoulder. One exception is shown in Section 55-4.03(02) Item 4. The figures in Chapters Fifty-three through Fifty-six provide the cross slopes used for each classification. For a paved shoulder of 1.2 m or narrower, the shoulder cross slope should be the same as that of the adjacent travel lane. See Figure 45-1A(1), Paved-Shoulder Cross Slope and Pavement Treatment, Tangent Section, with Underdrains; or Figure 45-1A(2), Paved-Shoulder Cross Slope and Pavement Treatment, Tangent Section, without Underdrains.

The following summarizes INDOT and local public agency practice:

1. Paved. The cross slope is 4%.

2. Curb Offset. The curb offset is paved and has the same cross slope as the adjacent travel lane, which is 2%.

3. Aggregate. The cross slope is 4 to 6%.

4. Earth. The cross slope is 6 to 8%.

45-1.02(06) Shoulder Corrugations

Shoulder corrugations should be considered for shoulders only on a roadway designed as a rural facility.

The minimum paved width for an outside shoulder to be corrugated is 1.8 m. If guardrail, concrete barrier railing, or another type of roadside barrier is adjacent to an outside shoulder, such minimum paved width is 2.1 m. The minimum paved width for a median shoulder to be corrugated is 1.2 m.

Shoulder corrugations should be milled, without regard to the shoulder-pavement material.

45-1.03 Auxiliary Lane

An auxiliary lane includes a left- or right-turn lane, acceleration or deceleration lane, or climbing lane. An auxiliary lane should be the same width as the adjacent travel lane, but not less than 3.0 m narrower. The figures in Chapters Fifty-three through Fifty-five provide the specific width criteria for an auxiliary lane. The figures also provide the criteria for shoulder width adjacent to an auxiliary lane.

The cross slope for an auxiliary lane should be 1% greater than that of the adjacent through lane.

Chapter Forty-six provides additional information for a two-way left-turn lane.

45-1.04 Parking Lane (On-Street)

For an urban-area project, the designer must evaluate the demand for parking. Such parking needs will be accommodated by providing an off-street parking facility. Chapter Fifty-one provides information on the design and layout of an off-street parking facility. If providing on-street parking along an urban street, the designer should evaluate the following.

1. Warrants. Adjacent land use may create the need to provide on-street parking along an urban street. A parking lane provides convenient access for a motorist to a business or residence. However, on-street parking reduces capacity, impedes traffic flow, may

produce undesirable traffic operations, or may increase the accident potential. Therefore, a new parking lane should not be placed along a State highway. The designer should consider removing parking lanes on a State-highway reconstruction (4R) project, wherever practical. Removal of, or revising an existing on-street parking configuration will require concurrence from local officials and an official action by INDOT.

2. Configuration. The two types of on-street parking are parallel and angle parking. These are illustrated in Figure 45-1B. Parallel parking is the preferred arrangement where street space is limited and traffic capacity is a major factor. Angle parking provides more spaces per linear foot than parallel parking, but a greater street width is necessary for this design. The total entrance and exit time for parallel parking exceeds that required for angle parking. Parallel parking also requires a vehicle to stop in the travel lane and await an opportunity to back into the parking space. However, the designer should also consider that angle parking requires the vehicle to back into the lane of travel where sight distance may be restricted by adjacent parked vehicles or where this maneuver may surprise an approaching motorist.

   In selecting the parking configuration, the designer should evaluate the operational consequences of the selection. The designer should consider the backing maneuver required with angle parking. As indicated in Figure 45-1B, the parked car will require a certain distance *B* to back out of its stall. Whether or not this is a reasonably safe maneuver will depend upon the number of lanes in each direction, lane width, operating speed, traffic volume during peak hours, parking demand, and turnover rate of parked vehicles.

   On a new-construction project, only parallel parking should be provided. An existing facility with angle parking should be converted to parallel parking. Changes to existing on-street parking will require concurrence from local officials and an official action by INDOT.

3. Stall Dimensions. Figure 45-1B provides the width and length criteria for a parking stall for various configurations. The figure also indicates the number of stalls which can be provided for each parking configuration for a given curb length.

   The figures in Chapters Fifty-three and Fifty-five provide parking-lane width for parallel parking. For angle parking, the parking lane width will be a combination of *A* and *B* as shown in Figure 45-1B, exclusive of the through travel lane. However, in a restricted area, a portion of the *B* dimension may be required for the through travel lane, thereby reducing the actual parking-lane width. Figure 45-1C provides the recommended street width that should be considered with on-street parking.

   Section 51-1.03 provides information on parking-stall dimensions for a handicapped parking space.

4. Cross Slope. The cross slope of the parking lane will be 1% steeper than that of the adjacent travel lane, therefore 3%.

5. Handicapped. Section 51-1.03 provides the handicapped-accessibility requirements for on-street parking.

6. Location. In locating parking spaces, the designer should consider the following.

   a. Parking is prohibited within 6 m of a crosswalk.

   b. Parking should be prohibited within 3 to 5 m of the beginning of the curb radius at a mid-block drive entrance.

   c. Parking is prohibited within 15 m of the nearest rail of a railroad-highway crossing.

   d. Parking is prohibited within 4.5 m of a fire hydrant.

   e. Parking is prohibited within 9 m on the approach leg to an intersection with a flashing beacon, stop sign, or traffic control signal. For a no-control or yield-controlled intersection, parking is not allowed within the intersection itself.

   f. Parking is prohibited within 6 m of the near side of a fire station drive entrance, and 23 m from the entrance for the opposite side of the street.

   g. Parking is prohibited on a bridge or within a highway tunnel.

   h. Parking is prohibited along the same side or opposite a street excavation or obstruction if it would obstruct traffic.

   i. Parking should be prohibited from areas designated by local traffic and enforcement regulations (e.g., near a school zone, loading zone, bus stop). See local ordinances for additional information on parking restrictions.

45-1.05 Curbs

Curbs are often used on an urban facility to retain the cut slope, control drainage, delineate the pavement edge, reduce right-of-way requirements, channelize vehicular movements, and improve

aesthetics. In an urban area, curbs have a major benefit in containing the drainage within the pavement area and in channelizing traffic into and out of adjacent properties.

A curbed cross section is an appropriate design option in an outlying suburban or intermediate setting, or in an area undergoing or in imminent transition from rural-to-suburban land use, as well as in a low-speed or built-up urban setting. This clarification and latitude to expand opportunities for selection of a curbed cross-section is due in part to a desire by INDOT to plan each facility in context with existing and planned land-use characteristics.

45-1.05(01) Warrants For a Curbed Section

Selecting a curbed section or uncurbed section depends upon many variables, including vehicular speed, urban or rural location, drainage, and construction costs. The following discusses those factors which will determine whether or not a curbed section is warranted.

1. Urban Location. A curbed section is typically used in a Built-Up urban area due to restricted right of way, other constraints, and to better delineate travel lanes or parking lanes from pedestrian-use areas.

   A curbed section may be considered in a Suburban or Intermediate location for a design speed as high as 90 km/h. The use of a curbed or uncurbed section will be made on a project-by-project basis, considering right-of-way constraints, drainage, pedestrian activity, channelization needs, drive access control, etc. This applies to new-construction, 4R, or 3R work in each functional classification other than freeway. The exceptions listed under Item 2 below for a rural location also apply to a high-speed Suburban facility.

2. Rural Location. The use of curbs is usually limited to conditions such as the following:

   a. where there is sufficient development along the highway and there is a need to channelize traffic into and out of properties;

   b. where it is absolutely necessary to control drainage;

   c. where restricted right-of-way provides insufficient space for roadside ditches;

   d. to lessen property impacts;

   e. to prevent soil erosion;

f. the design speed is 90 km/h or lower; or

g. where otherwise deemed absolutely necessary.

Shoulders may be appropriate in a curbed cross section. However, it is acceptable practice not to provide a shoulder aside a curb for a design speed of 90 km/h or lower. The appropriate figure in Chapter Fifty-three, Fifty-four, or Fifty-five shows the shoulder width adjacent to a curb where a shoulder is used.

45-1.05(02) Types

There are two types of curbs, sloping and vertical. A sloping curb has a height of 100 mm or lower with a face batter no steeper than approximately one horizontal to one vertical. A vertical curb has a height of up to 150 mm with a face batter steeper than one horizontal to six vertical. The INDOT *Standard Drawings* illustrate the typical curb sections used by the Department, and provide details for these and other curb types.

1. Sloping Curb.

   a. Curb Height of 100 mm. This curb height should be used where a curb is determined to be warranted and the design speed is 50 km/h or higher. In a Suburban or Intermediate urban location, the curb should be located at the edge of the paved shoulder. The shoulder widths to be used in either of these locations are shown in Figures 53-6 through 53-9, and Figures 55-3E through 55-3H.

   b. Curb Height of 85 mm. This curb height should only be used by a local public agency in a residential area where curbs are determined to be warranted. It should not be used on an INDOT-maintained route. However, it may be used to reconstruct a local street disturbed by INDOT-facility construction.

2. Vertical Curb. A vertical curb is only used on a low-speed, urban Built-Up facility where the design speed is 40 km/h or lower. A vertical curb may be used where the design speed reaches 60 km/h, but only for drainage or curbed-section continuity.

Although a vertical curb may deflect a vehicle at a lower speed, it should not be used in lieu of guardrail as protection from an obstruction. Where vehicular encroachment is permissible, a sloping curb should be used.

45-1.05(03) Curb-Type Selection

1. Materials. Concrete curbs are used. However, for a project on an existing facility, asphalt curbing, not to exceed 100 mm in height, may be used under guardrail to control erosion. Asphalt curbing may also be used for a temporary island, temporary median within a construction zone, etc. Where snowplowing operations are conducted, asphalt curbing may be subject to severe damage or total removal. Therefore, it should not be used where damage from snowplows can be expected.

2. Speed. Vertical curbs are used only on a low-speed, urban facility where the design speed is 80 km/h or lower. Preferably, curbs should not be used along a rural or high-speed urban highway with a design speed of 80 km/h or higher. If curbs are deemed necessary, only sloping curbs located at the edges of the shoulders should be used on such a high-speed facility.

3. Vehicular Encroachment. Although at a lower speed a vertical curb may deflect a vehicle, it should not be used in lieu of guardrail as protection from a hazardous object. Where vehicular encroachment is permissible, a sloping curb should be used.

4. Sidewalk. Where a sidewalk is present or is to be constructed in an urban area, a curb may be used. Consideration should be given to the type of curb existing or proposed in a similar condition within the adjacent geographical area.

5. Island. Where a divisional or directional island is used, it should be raised and corrugated. Section 46-9.0 and the INDOT *Standard Drawings* provide additional information on the design and placement of a raised corrugated island.

6. Local Practice. On a State highway, the designer should strive to meet the prevailing local practice where it does not conflict with Department criteria. Where local practice differs, INDOT criteria should prevail. On a non-State facility, local practice will govern.

45-1.05(04) Design Considerations

The use of a curbed section requires the consideration and implementation of the design considerations as follows.

1. Drainage. Department practice limits the allowable amount of water ponding on the roadway. A closed-drainage system is used with a curbed section. The hydraulic analysis will, among other factors, depend on the curb characteristics. These include type of material

(concrete or asphalt), cross slope leading up to the curb, and shape of the curb face. It may be necessary to prevent the gutter flow from overtopping the curb. This will affect the selected curb height. See Chapter Thirty-six for the specific criteria and procedure for drainage analysis.

The minimum profile grade in a curbed section is ±0.3%. Additional consideration should be given to the minimum grade in a curbed superelevation-transition area to avoid drainage problems. The following criteria will alleviate such problems.

a. A minimum profile grade of ±0.5% should be maintained through a superelevation-transition section.

b. A minimum edge of pavement grade of ±0.5% should be maintained through a superelevation-transition section. The equations to be considered for this criterion are as follows:

$G \leq -\Delta^* - 0.5$ [Equation 45-1.1]

$G \geq -\Delta^* + 0.5$ [Equation 45-1.2]

$G \leq \Delta^* - 0.5$ [Equation 45-1.3]

$G \geq \Delta^* + 0.5$ [Equation 45-1.4]

$$\Delta^* = \frac{wne_d}{L_r}$$ [Equation 45-1.5]

where,

G = profile grade, %;
Δ^* = effective maximum relative gradient, %;
w = width of one traffic lane, m (typically 3.6)
n = number of lanes rotated;
e_d = design superelevation rate, %;
L_r = length of superelevation runoff, m.

* * * * * * * *

EXAMPLE 45-1.01

To illustrate the combined use of the two criteria, consider the following:

Δ^*= 0.65% in the transition section

Criterion 1.a. described above excludes a grade between –0.5% and +0.5%.

Criterion 1.b. excludes a grade between -1.15% (via Equation 03-19.1, where $G \leq -0.65 - 0.5$, or -1.15), and -0.15% (via Equation 03-19.2, where $G \geq -0.65 + 0.5$, or -0.15).

Also, Criterion 1.b. excludes a grade between +0.15% (via Equation 03-19.3, where $G \leq +0.65 - 0.5$, or +0.15), and +1.15% (via Equation 03-19.4, where $G \geq +0.65 + 0.5$, or +1.15).

Therefore, the profile grade within the transition must be outside the range of –1.15% to +1.15% in order to satisfy both criteria and provide adequate pavement surface drainage.

See the AASHTO *A Policy on Geometric Design of Highways and Streets* for more information.

2. Cross Slope. Where an integral curb-and-gutter section is used, the cross slope of the gutter is the same as the adjacent pavement surface. Where a separate curb-and-gutter section is used, the gutter-pan cross slope is as shown in Figure 45-1D.

3. Roadside Safety. The placement of a barrier behind a curb must meet placement and height criteria. Chapter Forty-nine discusses roadside-safety criteria relative to a curb.

4. Future Resurfacing. The designer should consider the likelihood and depth of a future resurfacing course when determining the initial curb height. For example, the curb height may be determined from the sum of the water-overtopping depth (based on a drainage analysis) and the future resurfacing depth. Because milling of the pavement is becoming more prevalent, additional curb height may not be a consideration.

5. Parking Considerations. The curb height next to on-street parking should be 150 mm or less. This will allow clearance for the opening of a car door. The curb height on a street or parking lot with diagonal or perpendicular parking should also be limited to 150 mm to prevent underside vehicle damage.

6. Freeze-Thaw Considerations. The combined curb-and-gutter design removes the pavement joint away from the face of curb. After several freeze-thaw cycles, a standard curb type may become uneven and present an unsightly appearance; therefore, an integral or combined curb is preferable.

7. Handicapped Accessibility. A curb should be designed with a curb ramp at each pedestrian crosswalk to provide adequate access for the safe and convenient movement of physically-

handicapped individuals. Section 51-1.08 and the *INDOT Standard Drawings* provide details on the design and location of a curb ramp.

45-1.06 Sidewalk

A sidewalk is considered an integral part of the urban environment. In such an area, a traveler frequently chooses to make all or part of his or her trip on foot and a pedestrian desires to use a paved surface for the trip. In a rural area, a sidewalk is less common, but it may have sufficient value in a developed rural area, especially in the vicinity of a school, to warrant its construction.

45-1.06(01) Guidelines for Sidewalk Warrant

1. Sidewalk Currently Exists. Where a sidewalk currently exists and will be disturbed by construction, the sidewalk will be reconstructed in kind. If a bridge with an existing pedestrian sidewalk is reconstructed, the sidewalk will be retained.

   If a sidewalk exists only on one side of a State highway or bridge, the project will often include the construction of a new sidewalk on the other side. However, the funding and maintenance arrangements will be according to the criteria in Item 5 below.

2. Sidewalk Does Not Currently Exist on Roadway. The warrant for a sidewalk depends upon if the project is inside or outside city limits. The following provides guidance for each of these situations.

   a. Project within City Limits. At the preliminary field check stage, the designer should arrange a meeting between the appropriate district personnel and city officials to make a collective determination on the need for a sidewalk. If the city officials indicate that a sidewalk is needed and request that it be included as part of the project, the project will include the sidewalk. If Federal-aid funds are used, the Department may elect to help pay for the construction of the new sidewalk. However, if Federal-aid funds are not used, this will require a reimbursement agreement between the State and the city in accordance with Item 5 below. If the city officials indicate that the sidewalk is needed but do not want it included as part of the project, the designer should develop the plans so that a graded grassed area is provided for a future sidewalk. The incorporation will be responsible for installing the sidewalk in the future.

b. Project outside City Limits (Town or Rural Area). The Department may install a sidewalk if it deems it necessary. The need for a sidewalk will be determined as required for each project. No numerical warrants are available. The designer should consider providing a sidewalk along a roadway where pedestrians are present or would be expected be present if they had a sidewalk available (i.e., a latent demand exists such as evidence of a pathway along a highway).

Once the decision is made to provide a sidewalk along a roadway, the need for a sidewalk on both sides of the roadway will be determined as required for each project.

3. Sidewalk Does Not Currently Exist on Bridge. If a bridge is within the limits of a reconstruction (4R) or 3R project and if its bridge deck will be rehabilitated as part of the project, a sidewalk will be provided on the bridge if provided on the approach roadway. If the bridge deck will not be rehabilitated as part of the reconstruction or 3R project, it will rarely be warranted to perform work solely to provide a sidewalk on the bridge unless a sidewalk exists on the approaching roadway.

   Bridge-deck rehabilitation may be the only work on a 3R project. A sidewalk may be on the approach roadway or the approach roadway may be a candidate for a future sidewalk based on the discussion in Item 2 above. If so, a sidewalk should be included as part of the bridge-deck rehabilitation project.

   Once the decision is made to provide a sidewalk on a bridge, one will be constructed on each side, unless there is a justification to place a sidewalk on only one side.

4. Sidewalk Does Not Currently Exist on Underpass. An underpass may be within the limits of a project. If the approach roadway will have a sidewalk, it will be provided through the underpass, unless this would involve unreasonable costs to relocate the bridge substructure. A bridge-reconstruction project may involve major work on or the replacement of the bridge substructure. If the bridge passes over a roadway, the designer should consider allowing space for the future addition of a sidewalk through the underpass.

   Once the decision is made to provide a sidewalk through an underpass, one will normally be constructed along each side of the underpassing roadway, unless there is a justification to place a sidewalk on only one side.

5. Funding and Maintenance Considerations. Sidewalk funding and maintenance considerations are dependent upon project location. The following will apply:

a. City Limits. For a sidewalk constructed within city limits, the city will be responsible for the costs of constructing the sidewalk unless Federal-aid funds are used. The State may then participate. If totally funded by the city, a reimbursement agreement will be required between the Department and the city prior to the project letting. The State will be responsible for the cost of right-of-way acquisition and grading required specifically for the sidewalk.

b. Town or Rural Area. A new sidewalk constructed in a town or rural area outside of city limits may be funded with State or Federal-aid funds. This includes all costs for right-of-way acquisition, grading, and construction.

c. Bridge. Regardless of location, the total cost for a sidewalk on a bridge may be funded with State or Federal-aid funds.

45-1.06(02) Sidewalk-Design Criteria

In determining the sidewalk design, the designer should consider the following:

1. Width. A typical sidewalk is 1.5-m wide with a 1.5-m buffer area between the roadway and sidewalk. If there is no buffer area provided, the sidewalk should be 1.8 m wide to accommodate any appurtenances which may be included in the sidewalk (see Item 4 below).

   A high pedestrian volume may warrant a greater width in, for example, a commercial area or school zone. The designer may conduct a detailed capacity analysis to determine the sidewalk width. *Highway Capacity Manual* Chapter 13 should be reviewed for this analysis.

2. Handicapped Accessibility. A sidewalk should be in accordance with the handicapped-accessibility criteria provided in Section 51-1.05(01). Where this is not practical, the criteria in Section 51-1.05(02) may be used.

3. Urban Area. In a central business district, the entire area between a curb and a building is used as a paved sidewalk.

4. Appurtenance. The designer should consider the impacts of a roadside appurtenance within the sidewalk (e.g., fire hydrant, parking meter, utility pole). These elements will reduce the effective usable width because they interfere with pedestrian activity. Such an appurtenance should be placed behind the sidewalk. If it is placed within the sidewalk, the sidewalk should be widened accordingly.

5. Cross Slope. The cross slope is 2%. If the sidewalk is on an accessible route, the maximum cross slope will be 2%. See Section 51-1.05.

6. Buffer Area. If the available right of way is sufficient, a buffer area between the curb and sidewalk is desirable. This area provides space for snow storage and allows for a greater separation between vehicle and pedestrian. The buffer area should be at least 1.5-m wide to be effective and should desirably be wider. A buffer area may also be used for the placement of roadside appurtenances, if necessary. However, this is undesirable because the proximity to the traveled way increases the likelihood of a vehicle/fixed-object accident. The presence of an appurtenance in a buffer area detracts from the appearance of the highway environment.

7. Pedestrian Railing on Bridge. Chapter Fifty-nine provides criteria for where a pedestrian railing will be required on a bridge. Chapter Forty-nine provides information for the treatment of a blunt end of a pedestrian railing.

45-2.0 MEDIAN

A median is desirable on a highway with 4 or more lanes. The principal functions of a median are as follows:

1. to provide separation from opposing traffic,
2. to prevent undesirable turning movements,
3. to provide an area for deceleration and storage of left-turning vehicles,
4. to provide an area for storage of a vehicle crossing the mainline at an intersection,
5. to facilitate drainage collection,
6. to provide an area for snow storage,
7. to provide an open green space,
8. to provide a recovery area for an out-of-control vehicle,
9. to provide a refuge area in case of emergency,
10. to minimize headlight glare,
11. to provide an area for pedestrian refuge, or
12. to provide space for future lanes.

45-2.01 Median Width

The median should be as wide as can be used advantageously. The median width is measured from the edges of the two inside travel lanes and includes the left shoulders or curb offsets. The design width will depend on the functional classification of the highway, type of median, availability of right of way, construction costs, maintenance considerations, acceptable median slopes, the anticipated ultimate development of the facility, operations at crossing intersections, and field conditions. The designer should consider the following to determine an appropriate median width.

1. Left Turn. The need for a left-turn bay should be considered in selecting a median width.

2. Crossing Vehicle. A median should be approximately 8.0-m wide to safely allow a crossing passenger vehicle to stop between the two roadways. Where trucks are commonly present (e.g., truck stop), the median width should be increased to allow a truck to stop between roadways. The appropriate design vehicle for determining the median width should be chosen based on the actual or anticipated vehicle mix of crossroad or other traffic crossing the median.

3. Signalization. At a signalized intersection, a wide median can lead to inefficient traffic operation and may increase crossing time.

4. Median Barriers. A median barrier may be warranted in a narrow median. Therefore, the median should be wide enough to eliminate the need for a barrier. See Section 49-4.05.

5. Operations. Some vehicular maneuvers at an intersection are partially dependent on the median width. These include a U-turn or a turning maneuver at a median opening. The designer should evaluate the likely maneuvers at an intersection and provide a median width that will accommodate the selected design vehicle. See Section 46-8.01 and Item 2 above.

6. Separation. From a driver's perspective, a median width of 12 m physically and psychologically separates him or her from the opposing traffic.

7. Uniformity. A uniform median width is desirable. However, a variable-width median may be advantageous where right of way is restricted, at-grade intersections are widely spaced (800 m or more), or an independent alignment is practical.

8. Other Elements. The widths of other roadway cross-section elements should not be reduced to provide additional median width.

Section 45-8.0 include typical roadway cross-section figures which also provide design details for a median. Chapter Fifty-three provides specific numerical criteria for median width on a new-

construction or reconstruction project. On an existing highway, retaining of the existing median width will be determined as required for each project.

45-2.02 Median Type

Figure 45-2A illustrates the available median types: flush, flush with concrete median barrier, raised, or depressed. The following provides additional information on median type.

45-2.02(01) Flush Median

A flush median is used on an urban highway or street. A flush median should be slightly crowned to avoid ponding water in the median area. However, a flush median with a concrete median barrier should be depressed to collect water within a closed-drainage system.

The width for a flush median on an urban street ranges from 1.2 m to 4.8 m. If the median width is 4.8 m or less, the designer should consider using a continuous raised corrugated median or a slightly mounded median curb with 25 to 50 mm edge height. A corrugated type of median should be used where there is little or no anticipation that a motorist will drive onto the median to make a left turn. The INDOT *Standard Drawings* provide additional details for a corrugated or mounded median. To accommodate a left-turn lane, a flush median should be 4.2 m wide. This will allow a 3.6-m turn lane and a minimum 0.6-m separation between a left-turning vehicle and the opposing traffic.

A two-way left-turn lane (TWLTL) is also considered a flush median. The roadway cross section with a flush median will allow ultimate development for a TWLTL. The figures in Chapters Fifty-three, Fifty-five, or Fifty-six provide the criteria for TWLTL width. Section 46-5.02 provides information on design details for a TWLTL at an intersection.

A flush median with a concrete median barrier may be used on an urban freeway where the right of way does not allow for the use of a depressed median. For a new-construction or complete reconstruction project, the minimum width of a flush median for an urban freeway is 8 m. This allows the use of two 3.6-m left shoulders and the width of the concrete median barrier. On a partial-reconstruction project, the minimum width may be the existing median width.

45-2.02(02) Raised Median

A raised median is used on an urban highway or street to control access and left turns, and to improve the capacity of the facility. Figure 45-2A illustrates a raised median.

If compared to a flush median, a raised median offer the advantages as follows:

1. mid-block left turns are controlled;

2. left-turn channelization can be more effectively delineated if the median is wide enough;

3 a distinct location is available for traffic signs, signals, pedestrian refuge, or snow storage;

4. the median edges are more discernible during and after a snowfall;

5. drainage collection may be improved; and

6. limited physical separation is available.

If compared to a flush median, the disadvantages of a raised median are as follows:

1. it is more expensive to construct and more difficult to maintain;

2. it may need a greater width to serve the same function (e.g., left-turn lane at an intersection) because of the raised island and offset between curb and travel lane.

3. adverse vehicular behavior may result upon impact of a curb;

4. prohibiting mid-block left turns may overload a street intersection and may increase the number of U-turns;

5. it may complicate the drainage design; and

6. access for an emergency vehicle is restricted.

If a raised median will be used, the designer should consider the following in the design of the median:

1. Design Speed. Because of the possible adverse effect that a curb can have on a vehicular behavior if impacted, a raised median should only be used where the design speed is 80 km/h or lower.

2. Curb Type. Either a vertical or sloping curb with an edge height of 25 to 50 mm or more may be used.

3. Appurtenance. If practical, the placement of an appurtenance within the median is discouraged (e.g., traffic signal pole, light standard).

4. Desirable Width. If practical, the width should be sufficient to allow for the development of a channelized left-turn lane. This yields a 5.4-m median width, assuming the following:

   a. a 3.6-m turn lane,
   b. a 0.6-m curb offset between the opposing through lane and raised island, and
   c. a minimum 1.2-m raised island.

5. Minimum Width. The minimum width should be 2.4 m. This assumes a minimum 1.2-m raised island with 0.6-m curb offsets on each side adjacent to the through travel lanes. In a restricted location, a continuous vertical curb may be offset 0.3 m, and sloping curb may be offset 0 m. Under this condition, the minimum raised-median width with a vertical curb is 1.8 m, and that with a sloping curb is 1.2 m.

6. Raised Island (Paved). For a raised island up to 5 m wide, the island should be paved to reduce the maintenance requirements of the median.

7. Raised Island (Landscaped). For a raised island of 5 m or wider, the area between the curbs is backfilled and landscaped. However, where there are numerous signs, bridge piers, etc., in the island, it may be more economical to pave the raised island to eliminate excessive hand mowing.

45-2.02(03) Depressed Median

A depressed median is used where practical on a freeway or other divided rural arterial. A depressed median has better drainage and snow storage characteristics and, therefore, is preferred for a major highway. It provides the driver with a greater sense of comfort and freedom of operation. In the design of a depressed median, the designer should consider the following.

1. Width. It should be as wide as practical to allow for the addition of future travel lanes on the inside while maintaining a sufficient median width. See Chapters Fifty-three and Fifty-four.

2. Longitudinal Gradient. The minimum center longitudinal grade with an unpaved ditch should be 0.5%, or, with a paved ditch 0.3%. Under a restricted condition, a minimum grade of 0.3% or 0.2%, respectively, may be used.

3. Side Slope. The side slopes should be 6:1.

4. Ditch. On new construction, a 1.2-m flat-bottom ditch in the center should be considered.

5. Drainage Inlet. A drainage inlet should be designed with the top of the inlet flush with the ground or with traversable safety grates on the culvert ends. See Section 49-3.0 for more information.

6. INDOT *Standard Drawings*. The INDOT *Standard Drawings* provide additional details and layout for a depressed median.

45-3.0 ROADSIDE ELEMENTS

45-3.01 Fill Slope

A fill slope is the slope extending outward and downward from the edge of the shoulder to intersect the natural ground line. The slope criterion depend upon the functional classification, fill height, urban or rural location, project scope of work, and the presence of curbs. For new construction, a 6:1 slope should be used to the edge of the clear zone and, if the slope has not intersected the natural ground line at this point, a 3:1 or flatter slope is used to the toe. Figures 45-3A and 45-3B provide the fill-slope criteria.

Although Figures 45-3A and 45-3B provide specific criteria for a fill slope, consideration must be given to right-of-way restrictions, utility considerations, and roadside development in determining the appropriate fill slope for the site conditions. If practical a flatter fill slope than indicated should be used.

> ** *PRACTICE POINTER* **
>
> Grading for guardrail end treatment should not be shown on the Typical Cross Section sheet.

45-3.02 Cut Slope

45-3.02(01) Slope Rate

On a facility without curbs, a roadside ditch is provided in a cut slope to control drainage. Figure 45-3C provides the criteria for a cut section without a curb. As indicated in Figure 45-3C, the ditch section includes the foreslope, ditch width, and backslope as appropriate for the facility type. On a facility with curbs, a shelf is provided with a backslope beyond the shelf. Where a sidewalk is present or anticipated in the future, a minimum shelf width of 3.3 m should be provided. This provides a 0.3-m appurtenance strip behind the sidewalk. The minimum shelf width without a sidewalk or anticipated sidewalk may be 1.5 m. Applicable criteria are provided in Figure 45-3D. For a section with a curb, sidewalk and ditch, the designer should refer to Figure 45-3C for appropriate criteria beyond the sidewalk. The following provides additional information for an earth or rock cut.

45-3.02(02) Rock Cut (Backslope)

The backslope for a rock cut should not exceed 1:6. For a large rock cut, benching of the backslope may be required. Section 18-2.08 provides the benching criteria for a rock cut.

45-3.02(03) Material and Soils Conditions

The designer must ensure that permanent erosion control is considered in the design of a ditch in a cut slope. The Office of Materials Management will review the existing soils conditions to determine if additional measures may be required to control erosion (e.g., additional topsoil, special plantings, paving). It will be the designer's responsibility to consider such recommendations for incorporation into the plans. A longitudinal-ditch slope of 1% or steeper will require sodding. A slope of 3% or steeper will require a paved or riprap lining. For more information on the design of ditch lining, the designer should review Part IV and the INDOT *Standard Drawings*.

45-3.02(04) Roadside Safety

To safely accommodate a run-off-the-road vehicle, the ditch slopes should be as flat as practical. Section 49-3.02 provides specific criteria to determine desirable foreslope and backslope combinations. All hazards within the clear zone are to be removed, relocated, made breakaway, or shielded. See Chapter Forty-nine.

45-3.02(05) Hydraulic Design

Part IV discusses the hydraulic design of a roadside ditch. The depth of the ditch should ensure that the flow line for the design discharge (e.g., Q_{10}) will be below the subgrade intercept with the foreslope. The flattest longitudinal grade for an unpaved ditch should be 0.5%. A flatter longitudinal grade of 0.3% may be used under a restricted condition.

45-3.03 Reducing the Use of a 2:1 Slope

A slope of 2:1 or steeper should be avoided on an INDOT project unless it is absolutely necessary. Such a slope is extremely difficult to maintain, is susceptible to erosion problems, and in some soil types has serious slope-stability problems. The use of a 2:1 or steeper slope on a local-public-agency project will be at the discretion of the local public agency.

The acceptability of using a steeper-than-desirable sideslope differs depending on the project design criteria as follows.

45-3.03(01) New-Construction or Reconstruction Project (4R)

On a 4R project which requires additional right of way, the use of a 2:1 slope should be avoided where possible. In a deep cut or high fill, the additional right-of-way cost to construct a 3:1 slope beyond the clear zone is a minor consideration. If a 2:1 slope appears to be necessary at a select location, early geotechnical investigation should be conducted to determine its suitability.

In an urban area with limited or costly right of way, a 2:1 slope is permissible. Alternatives such as burying a pipe in a ditch to reduce the slope or constructing a mechanically-steepened slope should be evaluated if one of these practices will result in better slope stability. Another alternative is described in Section 36-6.08, which recommends the use of a curb under guardrail along the shoulder at the top of a steep slope with high erosion potential. Details of this practice are shown in the INDOT *Standard Drawing*s.

For an Interstate 4R rehabilitation project, it may not be feasible to upgrade each slope to provide the required clear zone due to environmental constraints or right-of-way limitations. If a slope steeper than 3:1 is retained, it should be evaluated to determine if guardrail is warranted using the figures shown in Section 49-4.04. A slope may also be evaluated using the software included in the AASHTO *Roadside Design Guide*. See Section 54-4.0.

The designer must prepare Design Exception Level Two documentation where a 2:1 sideslope is proposed on a 4R project. This should be completed at the grade-review stage. The

documentation must include a discussion of the economic or environmental reasons for needing a sideslope of 2:1 or steeper.

A slope of 3:1 instead of 2:1 should be used in a rock-cut area. Most rock is sandstone or shale and will not stand vertically. A backslope of 2:1 should be used only where good slope stability or sound rock has been verified.

45-3.03(02) 3R Project

The use of a 3:1 slope should be considered as described in Section 55-4.05(10) Item 2.a. If a steeper slope is required, a 2.5:1 slope should be considered before implementing a 2:1 slope. A slope behind guardrail at a corner of a bridge should not be steepened to 2:1, though the slope may be completely protected by the guardrail.

A location or situation that may warrant a slope of 2:1 or steeper is as follows:

1. roadway widening that encroaches into a wetland;

2. area with restrictive or costly right of way; or

3. slope at the end of a large culvert, bridge spillslope, or other location where it is desirable to protect the slope with riprap.

Where a 2:1 slope is specified, it should be protected with erosion-control blankets and capping soils suitable for growing vegetation. The designer should contact the Production Management Division's landscape architect concerning the possibility of capping a cut or fill slope steeper than 3:1.

45-4.0 BRIDGE OR UNDERPASS CROSS SECTION

The highway cross section must be carried over or under a bridge, which often requires special considerations because of the confining nature of a bridge and its high unit costs. The bridge or underpass section will depend upon the cross section of the approaching roadway, the highway functional classification, and the project scope of work.

45-4.01 Bridge

The road-design criteria will determine the proper cross section width of the roadway, and the bridge design will accommodate the paved approach width across each structure within the project limits. This will provide full continuity of the roadway section for the entire project. This process will, of course, require proper communication between the road designer and bridge designer to identify and resolve any problems.

The bridge cross section will be determined by the project scope of work. For new construction or a bridge project within the limits of a 4R road project, the criteria provided in Chapter Fifty-three will determine the cross section of the bridge. For a bridge project within the limits of a 3R road project, the cross section will be determined from the criteria shown in Chapter Fifty-four or Fifty-five. Section 40-6.0 provides project scope-of-work definitions and a map of the State highway system with designated 3R and 4R routes. The following will apply to the cross section of a bridge.

1. Clear-Roadway Width. Chapter Fifty-three provides criteria for a new-construction project and a bridge within the limits of a 4R road project. Chapters Fifty-four and Fifty-five provide criteria for a bridge within the limits of a 3R road project on a freeway or non-freeway. For a summary of bridge-width criteria, see Section 59-1.01.

2. Travelway-Width Reduction. Upon approaching a narrow bridge, the roadway width must be reduced to allow it to be accommodated by the bridge. The travelway-reduction transition should be designed using the taper rate shown in Figure 45-4A.

3. Auxiliary Lane. To determine the additional width needed for an auxiliary lane, the following will apply.

    a. Chapter Forty-eight discusses the warrants for and design of an auxiliary lane within an interchange. This may be needed across a bridge, for example, to accommodate vehicular weaving within a full-cloverleaf interchange.

    b. Chapter Forty-six discusses warrants for and the design of an auxiliary lane at an intersection, including two-way left-turn lane, turning roadway, and exclusive turn lane. This may impact the design width of a structure near an intersection.

    c. Section 44-2.0 discusses the warrants for and design of a climbing lane. The full width of this lane including shoulders will be provided across a structure.

    d. Chapters Fifty-three, Fifty-four and Fifty-five provide the width of an auxiliary lane for various project scopes of work (e.g., 3R, 4R) and facility type (e.g., arterial).

4. Cross Slope. On a tangent section, a new or reconstructed bridge will be constructed with a cross slope of 2% sloping away from the crown. The 2% applies to the entire width from the crown to the front face of railing or curb. The crown across the bridge will be in the same location as the approaching roadway's crown. An existing bridge to remain in place may retain an existing cross slope of 1.5%.

   On a superelevated roadway section, a break may be provided between the traveled way and the high-side shoulder. However, on a superelevated bridge, a constant slope at the superelevation rate is provided across the entire curb-to-curb or railing-to-railing width of the bridge. This applies to a fully-superelevated section, or a section within a superelevation transition.

   The approach roadway will include a shoulder with a cross slope different from that on the bridge. For example, the typical roadway shoulder cross slope on tangent is 4%. It will be necessary to transition the roadway shoulder slope to the bridge deck slope before reaching the bridge deck. The rate of transition should be consistent with the relative longitudinal slope used for a superelevation transition. This is described in Section 43-3.0.

   See Section 59-1.0 for the cross section for a bridge.

5. Median. Section 45-2.0 discusses the design of a median. Twin parallel structures will be used to carry a median across an overpass. For a long span with a sufficiently narrow median, some economy in substructure costs may be realized by constructing a single structure. Depending on site conditions, a single structure may be more cost effective than twin structures where the median width is approximately 10 m or less on a freeway or 6 m or less on another type of road. The median width at an overpass will match the median width on the approach.

6. Sidewalk. Section 45-1.06 provides the sidewalk warrants on a bridge. For design of a sidewalk on a bridge, see Chapter Sixty-one.

7. Side Slope. Section 45-3.0 provides criteria for fill and cut slopes along the roadway. If it is necessary to transition a slope, the transition should be made such that the maximum longitudinal slope along the roadside does not exceed 20:1 at a line measured a distance of 7.5 m from the edge of traveled way.

8. Ramp. For a bridge on an interchange ramp, the full paved width of the ramp should be provided across the bridge. See Section 48-5.0 for criteria on ramp width.

45-4.02 Underpass

The cross section of an underpass has a significant impact on the size of the overpassing structure. The underpass should be designed as described below.

1. Roadway Section. The full approach-roadway section, including the median width, should be provided through the underpass section.

2. Clear Zone. The roadside clear zone applicable to the approaching roadway section will be provided through the underpass. Section 49-2.0 provides clear-zone criteria, which are a function of design speed, traffic volume, highway alignment, and side slopes. If an auxiliary lane is provided through the underpass, this impacts the clear-zone determination. Section 49-2.0 discusses the width of a clear zone where an auxiliary lane is present.

3. Travelway-Width Reduction. Upon approaching a narrow underpass, the roadway width should be reduced to allow the roadway to pass under the bridge. The travelway-reduction transition should be designed using the taper rate shown in Figure 45-4A.

4. Sidewalk. Section 45-1.06 provides the sidewalk warrants through an underpass.

5. Side Slope. Section 45-4.01 discusses the rate of transition for modifying the rate of a fill or cut slope near an underpass.

6. Future Expansion. In determining the cross-section width of a highway underpass, the road designer should also consider the likelihood of future roadway widening. Widening an existing underpass in the future can be expensive. Therefore, the designer should evaluate the potential for further development in the vicinity of the underpass which would significantly increase traffic volume. If appropriate, a reasonable allowance for future widening may be made to provide sufficient lateral clearance for additional lanes.

7. Ramp. For an underpass on an interchange ramp, the full paved width of the ramp including shoulders and the clear-zone width should be provided through the underpass. See Section 48-5.0 for criteria on ramp width.

45-5.0 CHANGE IN ROADWAY CROSS SECTION

The transition from a divided facility to one of only 2 lanes is a complex decision-making area for a driver, who may not be expecting the lanes reduction. Therefore, the designer should use the safest criteria practical, whether the transition is permanent or temporary.

The horizontal alignment for a permanent or temporary transition should follow the criteria described in Chapter Forty-three. A temporary connection should be designed as a new facility. This includes, but is not limited to, superelevation, transition length, reverse curves, or the tangent length between curves.

Decision sight distance should be provided to and throughout the transition area. To achieve this objective, the project termini may need to be adjusted.

The following figures illustrate transition design.

1. Figure 45-5A provides the details for a transition from a 2-lane to a 4-lane facility on a curve. The transition may also be designed on a tangent. The designer must consider the design of the horizontal-alignment features. See Chapter Forty-three.

2. Figure 45-5B provides the details for a split transition from a 4-lane to a 2-lane facility on a tangent section.

3. Figure 45-5C provides the details for a split transition from a 4-lane undivided to a 4-lane divided facility on a tangent section.

4. Figure 45-5D provides the details for a split transition from a 4-lane undivided to a 5-lane TWLTL facility on a tangent section.

45-6.0 RIGHT OF WAY

45-6.01 Definitions

The following right-of-way definitions will apply:

1. Permanent Right of Way. Right of way acquired for permanent ownership by the State for an activity which is the responsibility of the State for an indefinite period of time. The State obtains the title to the property. Permanent right of way is acquired for roadway, utility accommodation, fill or cut slopes, etc.

2. Temporary Right of Way. Right of way required for the legal right of usage by the State to serve a specific purpose for a limited period of time. The period of time is until a project is completed, for building removal until the building is removed, or for condemnation until three years beyond December of the anticipated letting year at the time of condemnation.

Once the activity is completed, the State yields its legal right of usage and returns the land to its original condition as close as practical.

3. Right-of-Way Easement. Right of way required with the perpetual right to construct and maintain a public highway and incidental facilities over and across the surface of land. This includes the following:

   a. highway easement (e.g., relocating, cleaning, or repairing a legal ditch);
   b. utility easement for a private facility (e.g., pipeline, private access road); or
   c. storm-sewer easement.

4. Perpetual Easement. Right of way acquired with the perpetual or permanent right to construct and maintain an off-road facility such as a sewer line, drainage ditch, or other item (except that under the jurisdiction and control of a county drainage board) outside the highway or service-area right of way.

45-6.02 Width

The minimum right-of-way width will be the sum of the widths of travel lanes, shoulders, median (if applicable), ditches, plus that necessary for fill or cut slopes or for roadside clear zones, whichever is greater. The overall right-of-way width should be increased to provide additional width for the following.

1. Maintenance. A 2-m to 5-m maintenance area should be provided along each side of the roadway to accommodate maintenance equipment at the top or bottom of a cut or fill slope.

2. Utility Corridor. A utility corridor, for an underground or overhead utility, should be provided beyond the roadside clear zone. Chapter Ten provides additional information on the placement of utility lines within the highway right of way.

3. Future Expansion. The designer should initially consider obtaining sufficient right of way to meet the anticipated long-term corridor growth. This may include obtaining additional right of way for the following:

   a. a wider median to allow for the addition of future through travel lanes;
   b. expansion of an existing interchange;
   c. a future interchange; or
   d. expanding an existing 2-lane facility to a 4-lane divided highway.

The right-of-way width should be uniform, but this is not a necessity. In an urban area, a variable width may be necessary due to existing development or varying side slopes. Embankment heights may make it desirable to vary the right-of-way width. Right-of-way limits will likely have to be adjusted at each intersection or freeway interchange. Other right-of-way controls to be considered are as follows.

1. At a horizontal curve or intersection, additional right of way may be warranted to ensure that the necessary sight distances are always available in the future.

2. Where the necessary right-of-way width cannot be reasonably obtained, the designer should consider using steeper slopes, revising grades, or using retaining structures.

3. Right-of-way considerations at an interchange are discussed in Chapter Forty-eight.

Chapter Eighty-five provides additional criteria for establishing the right-of-way limits. The designer will coordinate with the Office of Real Estate on the purchase of right of way.

45-7.0 FRONTAGE ROAD

45-7.01 General

A frontage road serves numerous functions, depending on the type of facility served and the character of the surrounding area. It may be used to control access to the facility, to function as a street serving adjoining property, or to maintain circulation of traffic on each side of the main highway. A frontage road segregates local traffic from the higher-speed through traffic and serves drives of residences or commercial establishments along the highway. A connection between the main highway and frontage road, usually provided at a crossroad, furnishes access between the through road and adjacent property. Thus, the through character of the highway is preserved and is unaffected by subsequent development along the roadside.

A frontage road may be used with a facility of any functional classification. Its greatest use is adjacent to a freeway where its primary function is to distribute and collect traffic between local streets and the freeway interchanges. A frontage road is also desirable along an arterial street in either an urban or suburban area.

Despite its advantages, the use of a continuous frontage road on a relatively high-speed arterial street with intersections at grade may be undesirable. At a cross street, the various through and turning movements greatly increases the accident potential. Multiple intersections are also vulnerable to wrong-way entrances. Traffic operations are improved if the frontage road is located a

considerable distance from the main highway at the intersecting crossroad in order to lengthen the spacing between successive intersections along the crossroad. See Section 45-7.03.

A frontage road is parallel to the through roadway. It may or may not be continuous, and it may be provided on one or both sides of the arterial.

For a private frontage or access road, an economic analysis needs to be completed to ensure that the construction of the frontage road will be cost effective versus the purchasing of the property.

45-7.02 Functional Classification

The design elements of pavement width, cross slope, horizontal or vertical alignment, etc., should be provided consistent with the functional operation of the frontage road. The same considerations relative to functional classification, design speed, traffic volume, etc., apply to a frontage road as they would to another highway.

For a high-traffic volume continuous frontage road, the desirable functional classification will be one level below that of the main highway classification.

For a low-traffic volume non-continuous frontage road, the design functional classification should be local road or street.

45-7.03 Design

45-7.03(01) Design Elements

The selection of the appropriate design criteria is based on the functional classification of the frontage road. Once the functional classification has been determined, the appropriate design speed, lane and shoulder widths, etc., from the figures in Chapters Fifty-three through Fifty-five, can be selected.

45-7.03(02) One-Way Versus Two-Way Operation

From an operational and safety perspective, a one-way frontage road is preferred to two-way. A one-way operation may inconvenience local traffic to some extent, but the advantages in reducing vehicular and pedestrian conflicts at an intersecting street compensates for this inconvenience. There is some savings in pavement and right-of-way width. A two-way frontage road at a high-

traffic volume at-grade intersection complicates crossing and turning movements. An off ramp (e.g., slip ramp) joining a two-way frontage road should not be used because the potential for wrong-way entry is increased.

A two-way frontage road may be considered for a partially-developed urban area where the adjoining street system is so irregular or so disconnected that one-way operation would introduce considerable added travel distance and cause undue inconvenience. A two-way frontage road may also be appropriate for a suburban or rural area where points of access to the through facility from the frontage road are widely spaced.

45-7.03(03) Outer Separation

The area between the main highway and a frontage road is the outer separation. This separation functions as a buffer between the through traffic on the main highway and the local traffic on the frontage road. This separation also provides space for shoulders and ramp connections to or from the through facility.

The wider the outer separation, the less influence local traffic will have on through traffic. A wider separation lends itself to the landscape treatment and enhances the appearance of both the highway and the adjoining property. The outer separation between the through arterial and the frontage road should be 30 m in a rural area or 20 m in an urban area. These distances are measured between the edges of the through lanes for the main highway and frontage road. The intersection of the frontage road and crossroad should be 50 m or more from the intersection of the arterial and crossroad. This lengthens the spacing between successive intersections along the crossroad. The minimum width of outer separation will be that required for the shoulder adjacent to the main highway, the frontage road shoulder or offset, and a median barrier.

A substantial width is particularly advantageous at an intersection with a cross street. A wide outer separation minimizes vehicular and pedestrian conflicts. At an intersection, the outer separation should be based on future traffic considerations.

45-7.03(04) Access

The connection between the main highway and the frontage road are an important design element. On an arterial with slow-moving traffic and a one-way frontage road, a slip ramp or simple opening in a narrow outer separation may work reasonably well. A slip ramp from a one-way frontage road to a freeway is acceptable. However, a slip ramp from a freeway to a two-way frontage road is undesirable as it tends to induce wrong-way entry onto the freeway and may cause crashes at the

intersection of the ramp and frontage road. Therefore, on a freeway or other arterial with high operating speeds and a two-way frontage road, the access to the freeway should be provided at an interchange. Details for the ramp and frontage road design are provided in Section 48-6.04.

45-7.04 Design Considerations for Frontage-Road and Local-Road Intersection

Section 40-8.0 discusses the procedure for processing an exception to an INDOT design criterion. These apply to the design of a frontage road.

An existing, reconstructed, or proposed intersection between a frontage road and another facility may need to include a relatively restricted horizontal or vertical alignment on the frontage road as it approaches the intersection. Reduced alignment features near an intersection may be used, assuming that a prudent driver will reduce speed as the vehicle approaches the intersection with the higher-volume facility. Therefore, reduced alignment features for that portion of the frontage road near the intersection may be incorporated if most of the following conditions are met.

1. The frontage road is in a rural area.

2. The road has the appearance of a frontage road.

3. The frontage road does not have a length of over 800 m of open-highway conditions that could lead a motorist to conclude that he or she is on a through road.

4. The design speed of the frontage road is 80 km/h or lower.

5. There is a sufficient tangent length of 150 m to 200 m to allow for placement of advance curve warning and intersection signs.

6. The projected AADT on the frontage road must be 750 vpd or less.

7. The intersection approach should be controlled with a stop sign for the foreseeable future.

8. Stopping sight distance for the design speed on the frontage road or the local road is available at the approach.

Failure to be in accordance with one of these criteria should not preclude submitting a design exception request for reduced alignment features if a valid justification can be presented. Such factors as heavy development along the road; a posted speed limit lower than the design speed; adverse impacts to property owners and the environment; stable, but higher than recommended,

AADT; construction costs; adequate advance signing; and predicted driver reaction to the highway alignment should be considered.

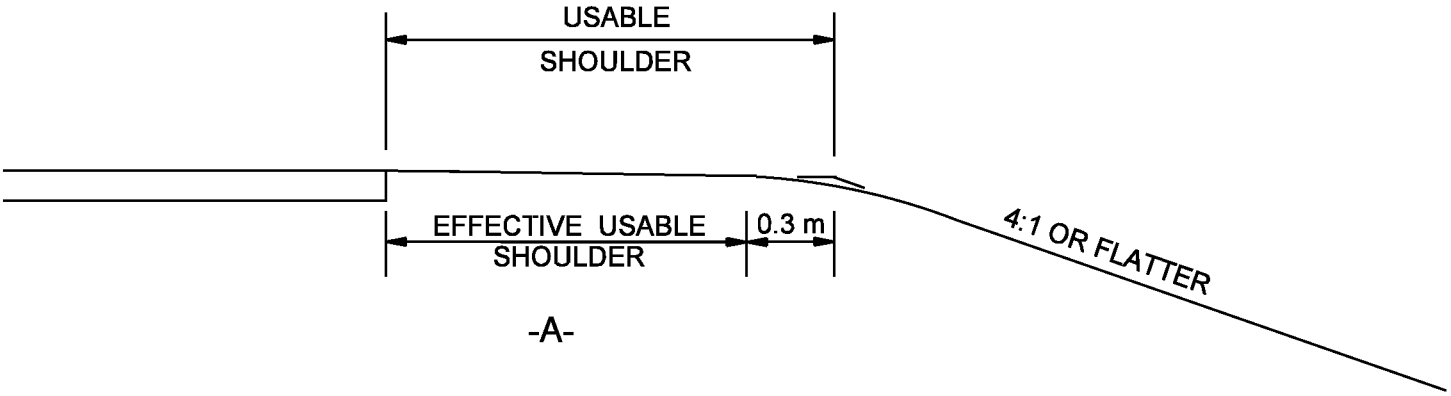

-A-

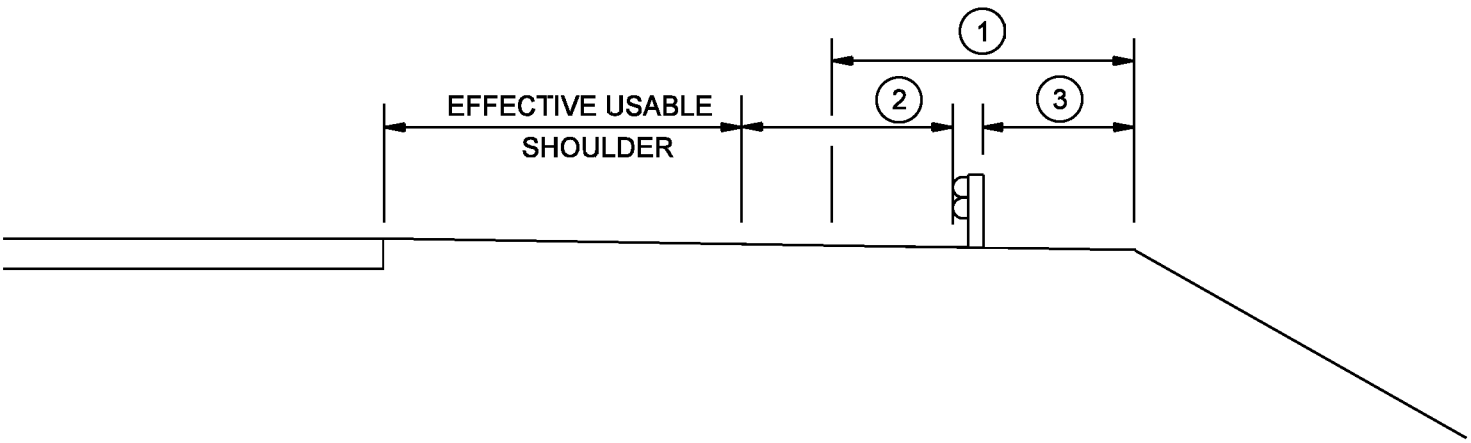

-B-

1 WIDENING AS REQUIRED TO PROVIDE BARRIER CLEARANCE AND LATERAL SUPPORT

2 BARRIER OFFSET VARIES FROM 0.0 m TO 0.6 m DESIRABLE

3 0.0 m MINIMUM, 0.6 m DESIRABLE

USABLE SHOULDER WIDTH

Figure 45-1A

Paved Shld. Width, (m)	Shoulder Cross Slope
≤ 1.2	2% [1]
> 1.2	2% [1] for the 0.6 m closest to the travel lane, then 4%

Notes:

[1] Where the travel lane tangent cross slope differs from 2%, the shoulder cross slope should match the travel lane cross slope.

2. The shoulder pavement section should be as described in Section 52-9.02(06).

PAVED-SHOULDER CROSS SLOPES, TANGENT SECTION, WITH UNDERDRAINS

Figure 45-1A(1)

Paved Shld. Width, (m)	Shoulder Cross Slope
≤ 1.2	2% [1]
> 1.2	4%

Notes:

[1] Where the travel lane tangent cross slope differs from 2%, the shoulder cross slope should match the travel lane cross slope.

2. The shoulder pavement section should be as described in Section 52-9.02(06).

PAVED-SHOULDER CROSS SLOPES, TANGENT SECTION, WITHOUT UNDERDRAINS

Figure 45-1A(2)

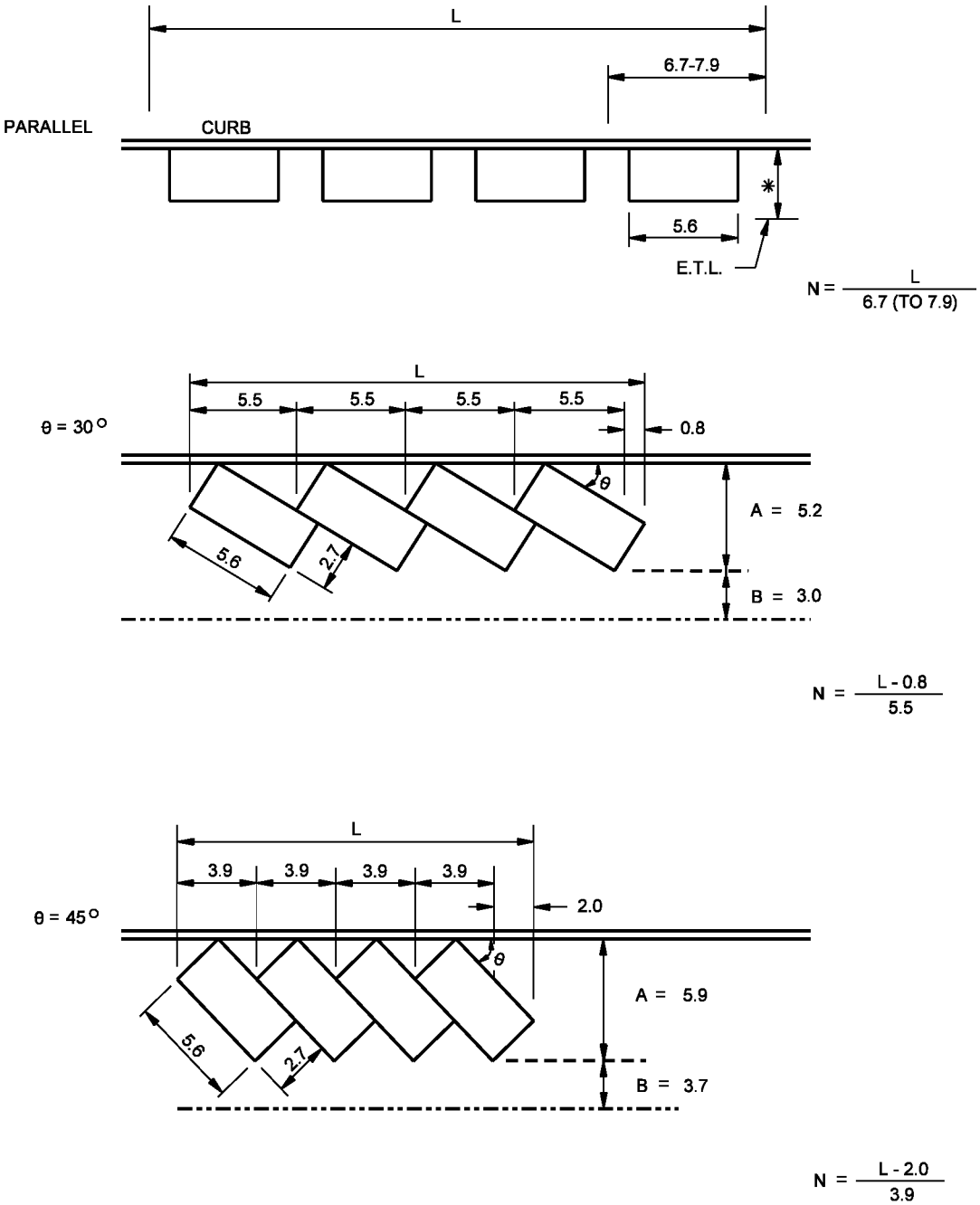

Note: All linear dimensions in meters.

CURB PARKING CONFIGURATIONS

Figure 45-1B

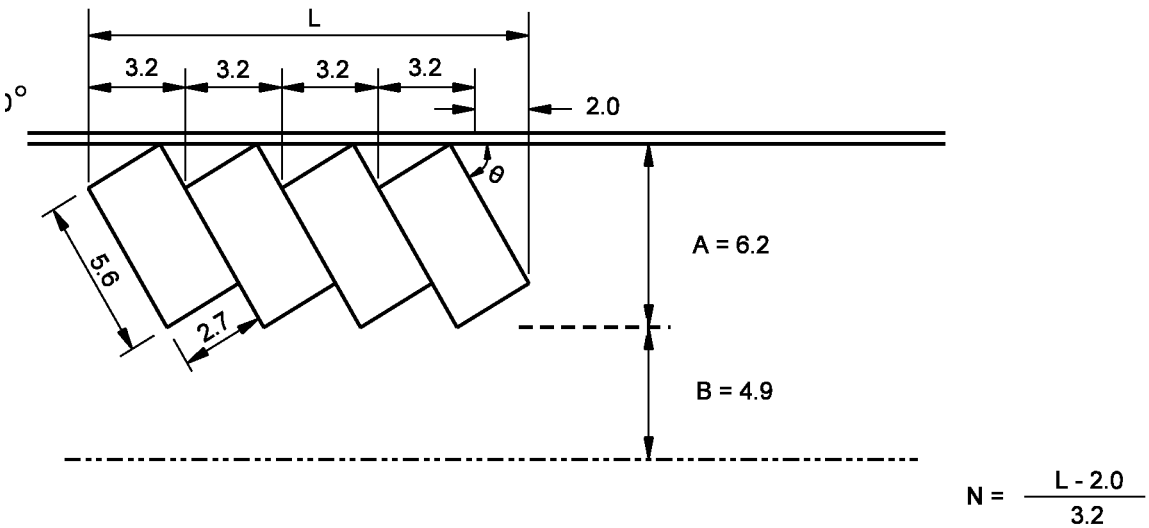

Key: L = given curb length with parking spaces

N = number of parking spaces over distance L

A = required distance between face of curb and back of stall, assuming that bumper of parked car does not extend beyond curb face.

B = desirable clear distance needed for a parked vehicle to back out of stall while just clearing adjacent parked vehicles.

All dimensions are in meters unless otherwise noted.

* See Tables in Chapters Fifty-three and Fifty-five for parking lane widths.

CURB PARKING CONFIGURATIONS (Continued)

Figure 45-1B

PARKING CONDITION	WIDTH (m)
No parking on either side of street	9.4
Parallel parking on one side	9.7
Parallel parking on both sides	12.2
Angle parking on one side	16.1
Angle parking on one side, parallel on the other	18.6
Angle parking on both sides	25.0
Parallel parking on both sides, with lane lines	19.5
Angle parking on both sides, with lane lines	32.3

DESIRABLE STREET WIDTH WITH ON-STREET PARKING

Figure 45-1C

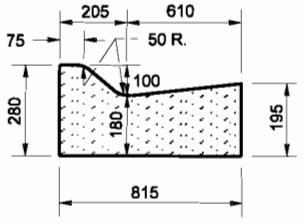

COMBINED CONCRETE CURB AND GUTTER, TYPE B (SLOPING)

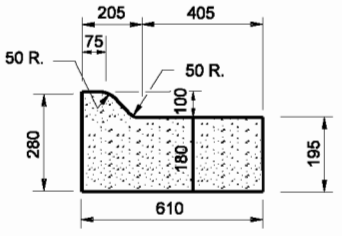

MODIFIED COMBINED CONCRETE CURB AND GUTTER, TYPE B (SLOPING)

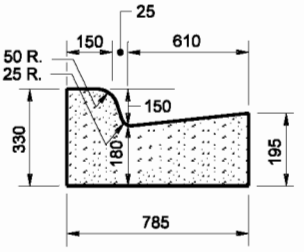

COMBINED CONCRETE CURB AND GUTTER (VERTICAL)

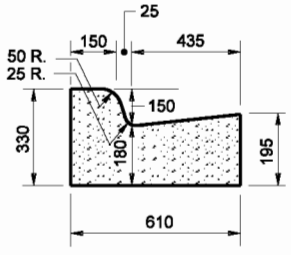

MODIFIED COMBINED CONCRETE CURB AND GUTTER (VERTICAL)

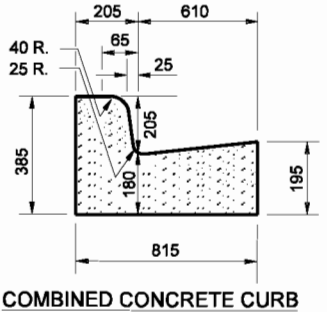

COMBINED CONCRETE CURB AND GUTTER, TYPE C (VERTICAL)

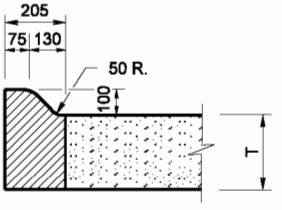

INTEGRAL CONCRETE CURB TYPE B (SLOPING)

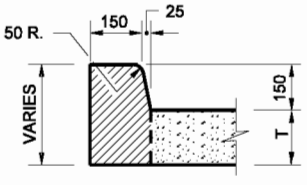

INTEGRAL CONCRETE CURB (VERTICAL)

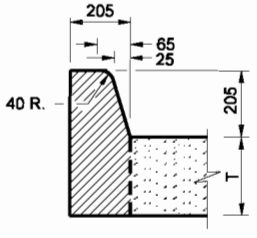

INTEGRAL CONCRETE CURB TYPE C (VERTICAL)

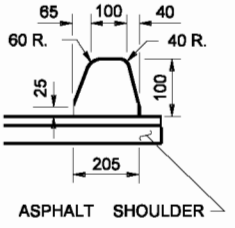

ASPHALT CURB (SLOPING)

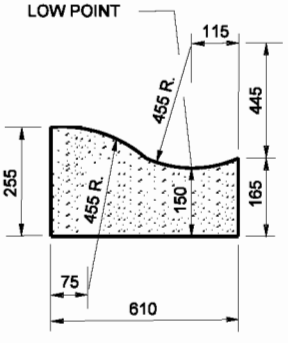

ROLLED CURB (SLOPING)

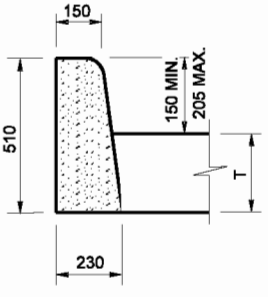

CONCRETE CURB (VERTICAL)

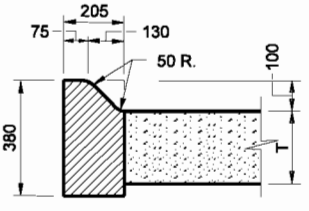

CONCRETE CURB TYPE B (SLOPING)

Figure 45-1D

NOTE: ALL DIMENSIONS ARE IN mm.

CURBING TYPES

Figure 45-1D

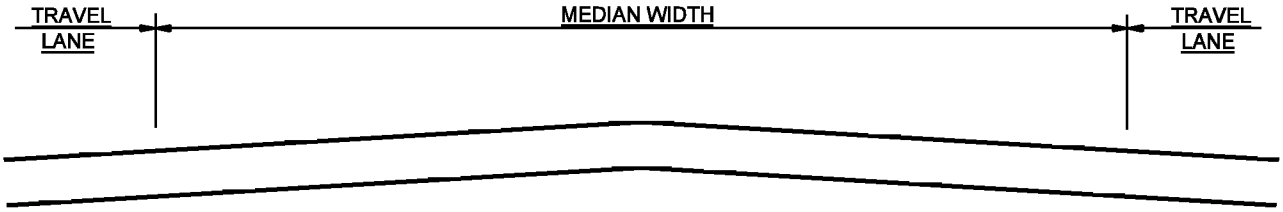

FLUSH MEDIAN

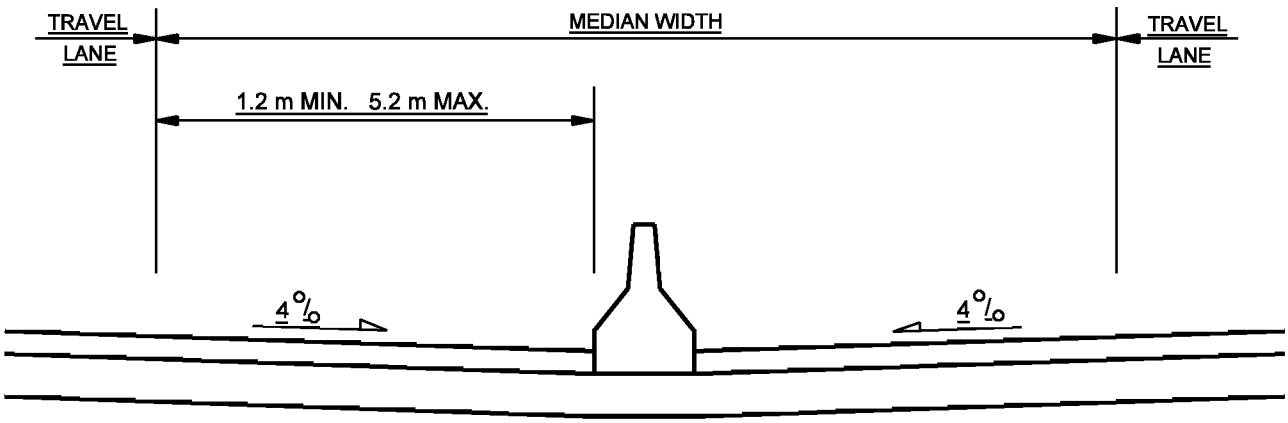

FLUSH MEDIAN
WITH CONCRETE MEDIAN BARRIER

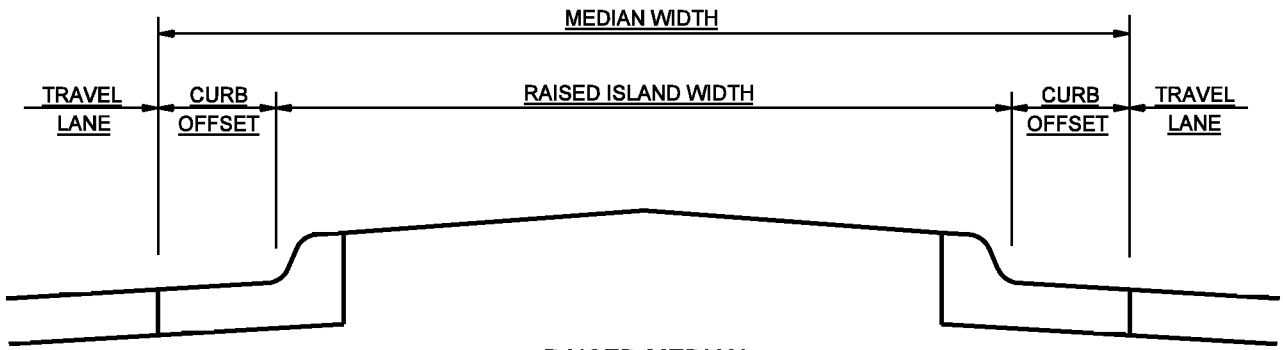

RAISED MEDIAN

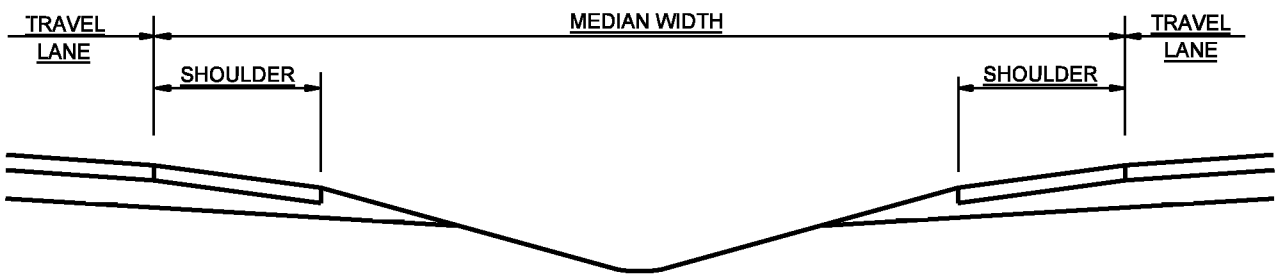

DEPRESSED MEDIAN

MEDIAN WIDTH DEFINITIONS

Figure 45-2A

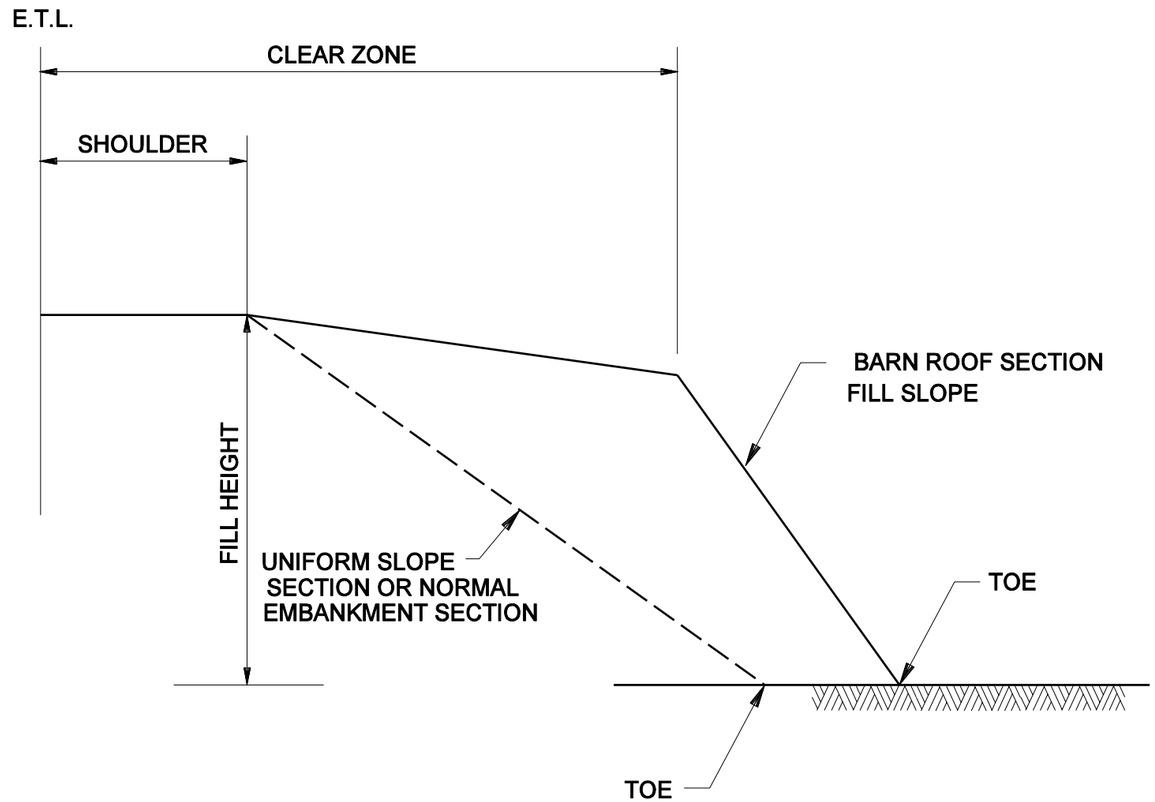

FACILITY	FILL HEIGHT	FILL SLOPE (1)
Freeways Urban/Rural Arterials Urban/Rural Collectors		6:1 to clear zone edge; 3:1 maximum to toe See Section 49-2.03
Rural Local Roads	0-9 m > 9 m	Desireable 4:1 Maximum 3:1 3:1 Maximum
Urban Local Streets	All	3:1 Maximum

(1) Slopes shown in table are for new construction only. See Chapter Forty-nine for reconstruction.

TYPICAL FILL SLOPES
(Non-Curbed Facilities)

Figure 45-3A

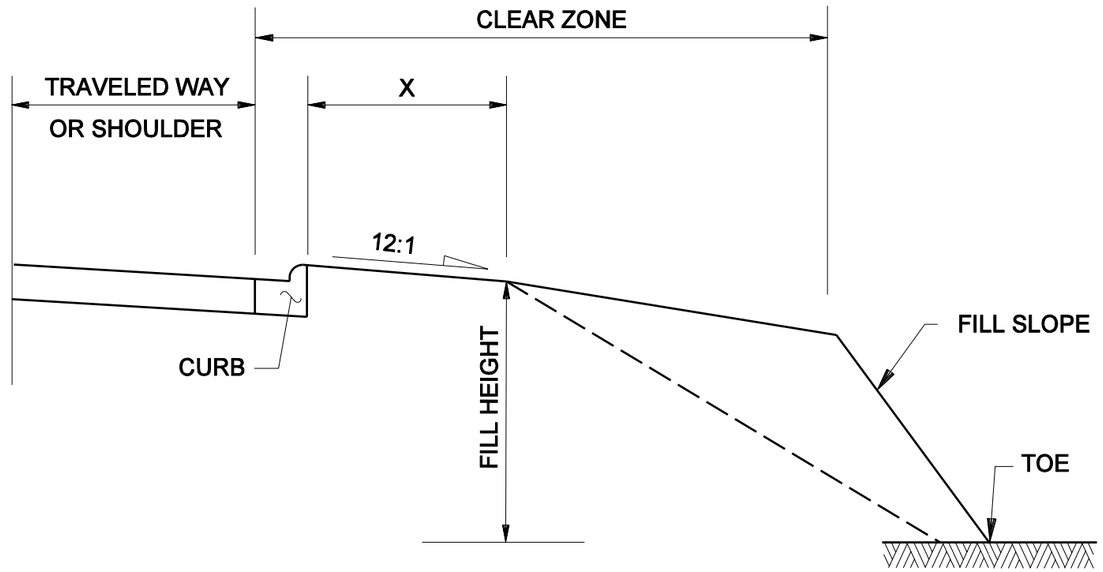

FACILITY	X	FILL HEIGHT	FILL SLOPE
Freeways	N/A	N/A	N/A
Rural Arterials Rural Collectors	1.5 m (1)	All	6:1 to clear zone edge; 3:1 or flatter to toe
Rural Local Roads	1.5 m (1)	0-9 m > 9 m	Des: 4:1 Max.: 3:1 3:1 Maximum
Urban Arterials Urban Collectors Urban Local Streets	3.3 m (2)	All	3:1 Maximum

(1) If sidewalks are present or anticipated, this dimension should be 3.3 m.
(2) If sidewalks are not present or anticipated, this dimension may be reduced to 1.5 m.

TYPICAL FILL SLOPE
(Non-Curbed Facilities)

Figure 45-3B

FACILITY	FORESLOPE	DITCH WIDTH (2)	BACKSLOPE (3)	
			A	B
Freeway	6:1	1.2	4:1 for 6.0 m	$H \leq 3.0$ m; 4:1 $H > 3.0$ m; 3:1
Arterial or Rural Collector	6:1	1.2	4:1 for 6.0 m	3:1 max to top
Urban Collector	Des. 6:1 Max. 4:1	1.2	4:1 for 1.2 m	3:1 max to top
Rural Local Road $V \geq 80$ $V \leq 70$	4:1 (max) 3:1 (max)	Des. 1.2 Min. "V"	4:1 (max) 3:1 (max)	
Urban Local Street	3:1 (max)	Des. 1.2 Min. "V"	3:1 (max)	

Notes:

(1) *See Sections 49-2.0 and 49-3.0 to determine lateral extent of the foreslope in a ditch section.*

(2) *For a rock cut, see Section 45-8.0. Figure value may be exceeded where drainage capacity or other considerations warrant.*

(3) *Value is for earth cut and represents maximum slope. See Section 45-8.0 for typical rock-cut sections.*

TYPICAL CUT SLOPE,
NON-CURBED FACILITY

Figure 45-3C

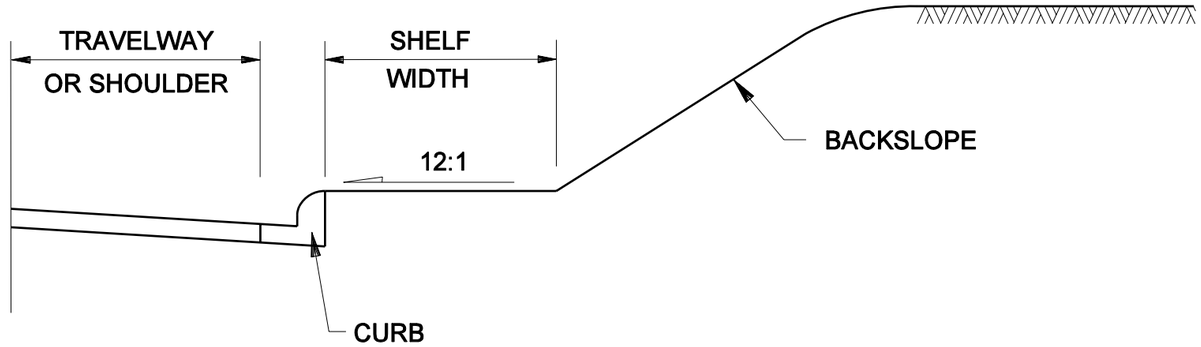

* 50:1 where sidewalk exists, is to be constructed or is anticipated to be constructed in the future (may be sloped away from curb)

FACILITY	SHELF WIDTH (2) (m)	BACKSLOPE
Freeways	N/A	N/A
Rural Facilities	3.3 m (1)	4:1 Maximum
Urban Arterials Urban Collectors	3.3 m (1)	4:1
Urban Local Streets	3.3 m (1)	3:1

Note:
(1) Includes a 0.3-m appurtenance strip behind the sidewalk. If no sidewalk is present or anticipated, this dimension may be reduced to 1.5 m.
(2) Drainage facilities may be required between shelf and backslope.

TYPICAL CUT SLOPES
(Curbed Facilitiy)

Figure 45-3D

Design Speed (km/h)	Taper Rate
30	10:1
40	15:1
50	20:1
60	25:1
70	45:1
80	50:1
90	60:1
100	65:1
110	70:1
120	75:1

TAPER RATE FOR LANE REDUCTION

Figure 45-4A

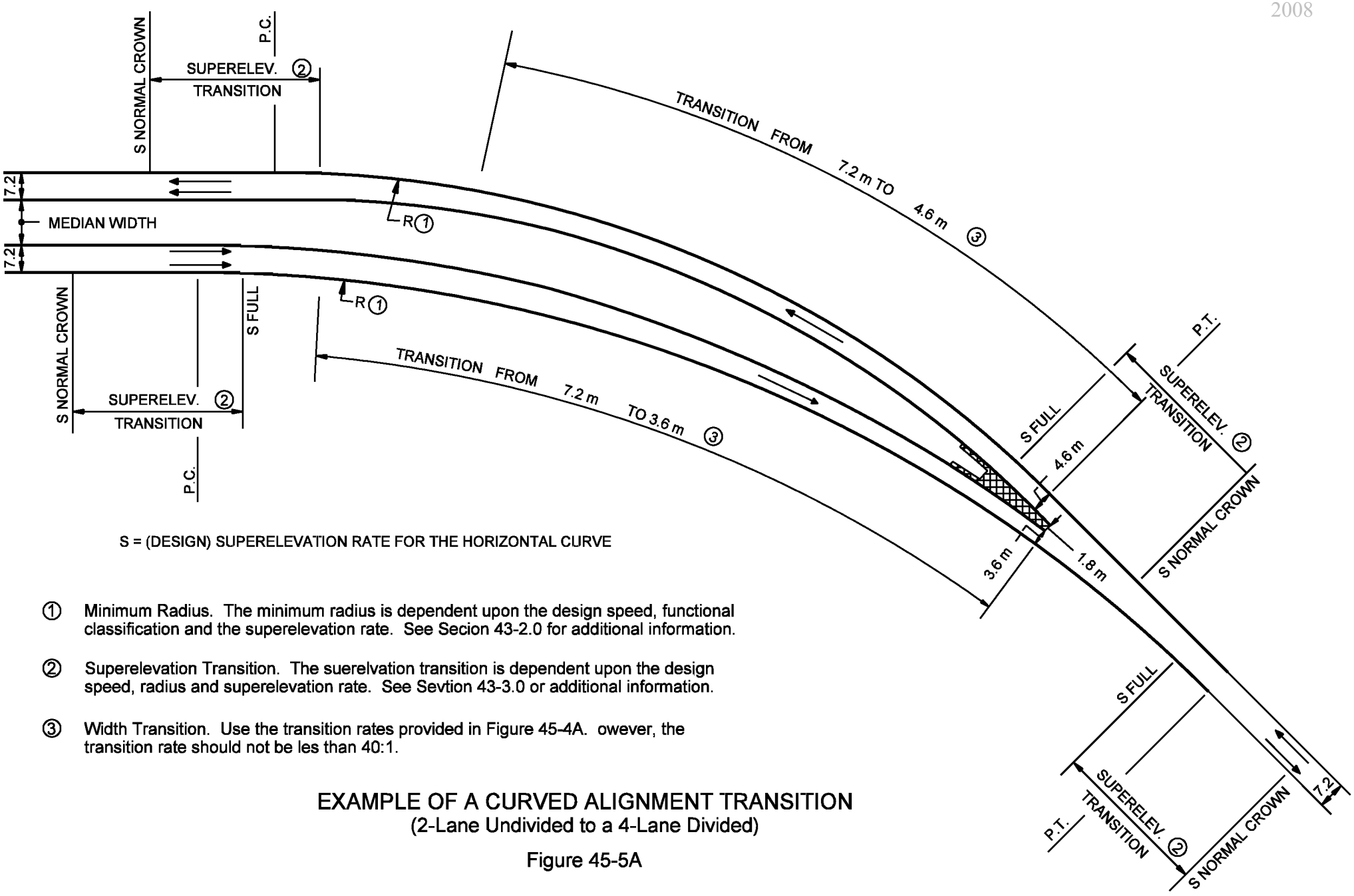

S = (DESIGN) SUPERELEVATION RATE FOR THE HORIZONTAL CURVE

① Minimum Radius. The minimum radius is dependent upon the design speed, functional classification and the superelevation rate. See Secion 43-2.0 for additional information.

② Superelevation Transition. The suerelvation transition is dependent upon the design speed, radius and superelevation rate. See Sevtion 43-3.0 or additional information.

③ Width Transition. Use the transition rates provided in Figure 45-4A. owever, the transition rate should not be les than 40:1.

EXAMPLE OF A CURVED ALIGNMENT TRANSITION
(2-Lane Undivided to a 4-Lane Divided)

Figure 45-5A

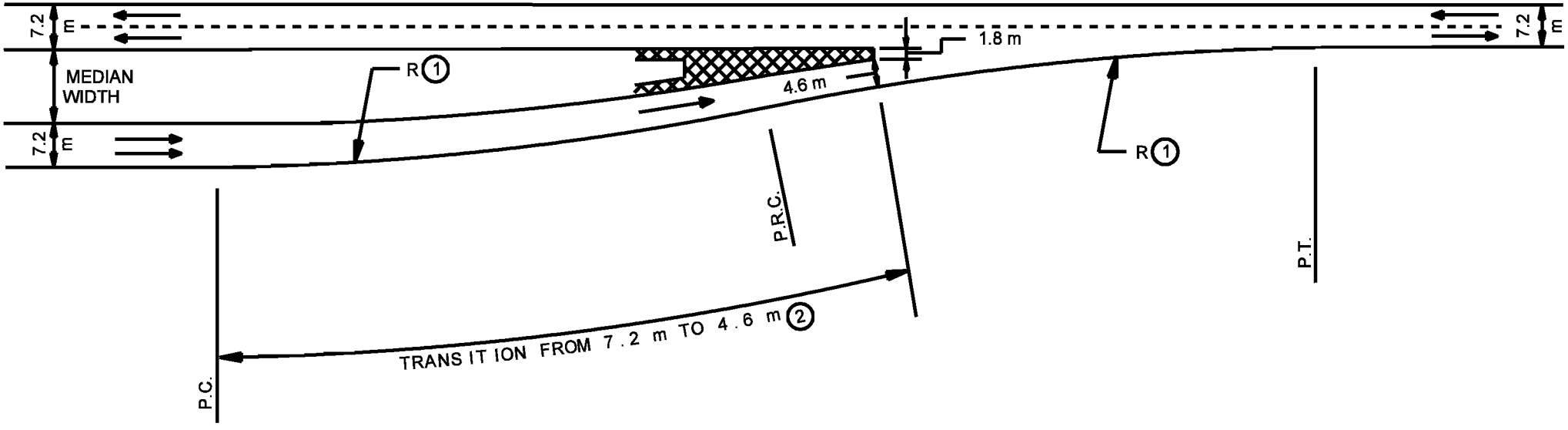

1 Minimum Raidous. The minimum raidus is dependent upon the design speed, functional classification and the superelevation rate. See Section 43-2.0 for additional information.

2 Width Transition. Use the transition rates provided in Figure 45-4A. However, the transition rate should not be less than 40:1.

SPLIT TRANSITION
(2-Lane Undivided to a 4-Lane Divided)

Figure 45-5B

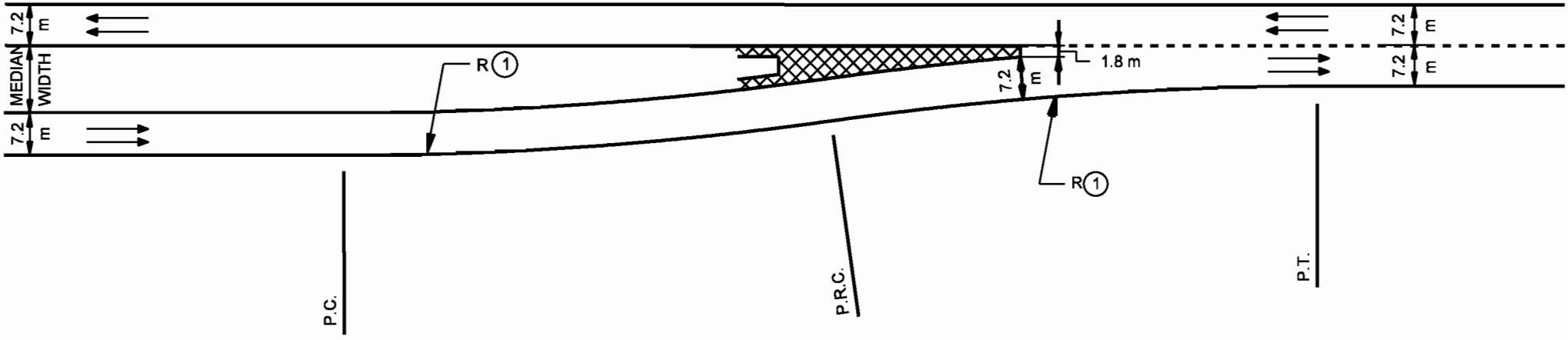

1 Minimum Radius. The minimum radius is dependent upon the designspeed, functional classification and the superelevation rate. See Section 43-2.0 for additional information.

SPLIT TRANSITION
(4-Lane Undivided to a 4-Lane Divided)

Figure 45-5C

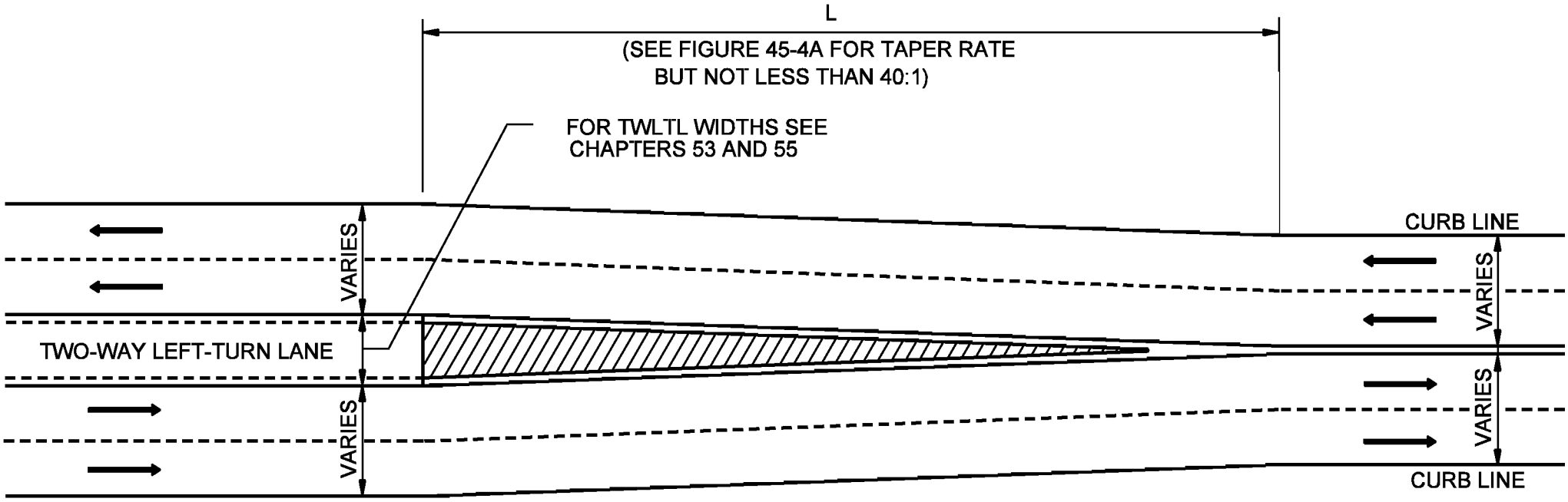

Note: See MUTCD, INDOT Standard Drawings and Chapter Seventy-six for proper striping and delineation detaiils.

TWO-WAY LEFT-TURN LANE TRANSITION

Figure 45-5D