TABLE OF CONTENTS

TABLE OF CONTENTS 1
LIST OF FIGURES 4
38-1A Symbols and Definitions 4
38-5A Longitudinal Extent of Revetment Protection 4
38-5B Wave Height Definition Sketch 4
38-5C Correction Factors for Wave Runup 4
38-5D Wave Runup on Smooth, Impermeable Slopes 4
38-6A Riprap Size Relationship 4
38-6B Bank Angle Correction Factor (K_1) Nomograph 4
38-6C Angle of Repose of Riprap in Terms of Mean Size and Shape of Stone 4
38-6D Definition Sketch (Channel Flow Distribution) 4
38-6E Correction Factor for Riprap Size 4
38-6F Guidelines for the Selection of Stability Factors 4
38-6G Hudson Relationship for Riprap Size Required to Resist Wave Erosion 4
38-6H Rock Riprap Gradation Limits 4
38-6 I Riprap Gradation Classes 4
38-6J Material Gradation 4
38-6K Editable Filter Design form 4
38-6L Geotextile Filters 4
38-6M Typical Riprap Installation: Plan and Flank Details 4
38-6N Typical Riprap Installation: End View 4
38-6 O Launching of Riprap Toe Material 4
38-6P Editable Riprap Size Particle Erosion form 4
38-6Q Editable Riprap Data Sheet 4
38-6R Riprap Size Form (Example 1) 4
38-6S Riprap Size Relationship (Example 1, Step 7) 4
38-6T Channel Geometry Development (Example 2) 4
38-6U Riprap Size Form (Example 2) 4
38-6V Channel Cross Section for Example 2 Illustrating Flow and Potential Scour Depths 4
38-6W Toe and Flank Details (Example 2) 4
38-6X Rock and Wire Mattress Configuration 4
38-6Y Rock and Wire Mattress Installation Covering the Entire Channel Perimeter 4
38-6Z Typical Detail of Rock and Wire Mattress (Constructed from Available Wire Fencing Materials) 4
38-6AA Standard Gabion Sizes 4
38-6BB Mattress Configuration 4
38-6CC Criteria for Gabion Thickness 4
38-6DD Minimum Coating Weight 4
38-6EE Flank Treatment for Rock and Wire Mattress Designs 4
38-6FF Rock and Wire Revetment Mattress Installation 5
38-6GG Mattress Placement Underwater by Crane 5
38-6HH Pontoon Placement of Wire Mattress 5
38-6 II Typical Stacked Block Gabion Revetment Details 5
38-6JJ Gabion Basket Fabrication 5
38-6KK Monoslab Revetment 5
38-6LL Armorflex 5

38-6MM Petraflex ... 5
38-6NN Articulated Concrete Revetment ... 5
38-6 OO Tri-Lock Revetment ... 5
38-6PP Grouted Riprap Sections ... 5
38-6QQ Required Blanket Thickness as a Function of Flow Velocity ... 5
38-6RR Recommended Grading of Grouted Rock Slope Protection ... 5
38-6SS Grouted Fabric-Formed Revetment (Type 1) ... 5
38-6TT Grouted Fabric-Formed Revetment (Type 2) ... 5
CHAPTER THIRTY-EIGHT ... 6
38-1.0 INTRODUCTION ... 6
38-1.01 Purpose ... 6
38-1.02 Erosion Potential ... 6
38-1.03 Symbols and Definitions ... 7
38-2.0 POLICY ... 7
38-3.0 BANK- AND LINING-FAILURE MODES ... 8
38-3.01 Potential Failures ... 8
38-3.02 Particle Erosion ... 8
38-3.03 Translational Slide ... 9
38-3.04 Modified Slump ... 9
38-3.05 Slump ... 9
38-4.0 REVETMENT TYPES ... 9
38-4.01 Common Types ... 9
38-4.02 Riprap ... 10
38-4.03 Wire-Enclosed Rock ... 10
38-4.04 Precast-Concrete Block ... 10
38-4.05 Grouted Riprap ... 10
38-4.06 Grouted Fabric Slope Pavement ... 11
38-4.07 Sand-Cement Bags ... 11
38-4.08 Soil Cement ... 11
38-5.0 DESIGN CONCEPTS ... 12
38-5.01 Introduction ... 12
38-5.02 Design Discharge ... 12
38-5.03 Flow Types ... 12
38-5.04 Section Geometry ... 13
38-5.05 Flow In Channel Bend ... 13
38-5.06 Flow Resistance ... 14
38-5.07 Extent of Protection ... 14
38-5.07(01) Longitudinal Extent ... 14
38-5.07(02) Vertical Extent ... 15
38-6.0 DESIGN GUIDELINES ... 17
38-6.01 Rock Riprap ... 17
38-6.01(01) Bank Slope ... 17
38-6.01(02) Rock Size ... 18
38-6.01(03) Rock Gradation ... 21
38-6.01(04) Layer Thickness ... 22
38-6.01(05) Filter Design ... 22
38-6.01(06) Edge Treatment ... 26
38-6.01(07) Construction Considerations ... 26
38-6.01(08) Design Procedure ... 27

38-6.01(09) Design Examples 29
38-6.02 Wire-Enclosed Rock 38
38-6.02(01) Mattress Gabion 39
38-6.02(02) Stacked-Block Gabion 42
38-6.03 Precast Concrete Blocks 44
38-6.03(01) Block Configurations 44
38-6.03(02) Design Guidelines 44
38-6.03(03) Construction 46
38-6.04 Grouted Riprap 47
38-6.04(01) Design Guidelines 47
38-6.04(02) Construction 49
38-6.05 Grouted-Fabric Slope Paving 49
38-6.05(01) Types 49
38-6.05(02) Design Guidelines 50
38-6.06 Sand-Cement Bags 50
38-6.06(01) Design Guidelines 50
38-6.06(02) Construction 51
38-6.07 Soil-Cement 52
38-6.07(01) Design Guidelines 52
38-6.07(02) Construction 53
38-7.0 REFERENCES 54

LIST OF FIGURES

Figure Title

38-1A Symbols and Definitions
38-5A Longitudinal Extent of Revetment Protection
38-5B Wave Height Definition Sketch
38-5C Correction Factors for Wave Runup
38-5D Wave Runup on Smooth, Impermeable Slopes
38-6A Riprap Size Relationship
38-6B Bank Angle Correction Factor (K_1) Nomograph
38-6C Angle of Repose of Riprap in Terms of Mean Size and Shape of Stone
38-6D Definition Sketch (Channel Flow Distribution)
38-6E Correction Factor for Riprap Size
38-6F Guidelines for the Selection of Stability Factors
38-6G Hudson Relationship for Riprap Size Required to Resist Wave Erosion
38-6H Rock Riprap Gradation Limits
38-6 I Riprap Gradation Classes
38-6J Material Gradation
38-6K Editable Filter Design form
38-6L Geotextile Filters
38-6M Typical Riprap Installation: Plan and Flank Details
38-6N Typical Riprap Installation: End View
38-6 O Launching of Riprap Toe Material
38-6P Editable Riprap Size Particle Erosion form
38-6Q Editable Riprap Data Sheet
38-6R Riprap Size Form (Example 1)
38-6S Riprap Size Relationship (Example 1, Step 7)
38-6T Channel Geometry Development (Example 2)
38-6U Riprap Size Form (Example 2)
38-6V Channel Cross Section for Example 2 Illustrating Flow and Potential Scour Depths
38-6W Toe and Flank Details (Example 2)
38-6X Rock and Wire Mattress Configuration
38-6Y Rock and Wire Mattress Installation Covering the Entire Channel Perimeter
38-6Z Typical Detail of Rock and Wire Mattress (Constructed from Available Wire Fencing Materials)
38-6AA Standard Gabion Sizes
38-6BB Mattress Configuration
38-6CC Criteria for Gabion Thickness
38-6DD Minimum Coating Weight
38-6EE Flank Treatment for Rock and Wire Mattress Designs

38-6FF Rock and Wire Revetment Mattress Installation
38-6GG Mattress Placement Underwater by Crane
38-6HH Pontoon Placement of Wire Mattress
38-6 II Typical Stacked Block Gabion Revetment Details
38-6JJ Gabion Basket Fabrication
38-6KK Monoslab Revetment
38-6LL Armorflex
38-6MM Petraflex
38-6NN Articulated Concrete Revetment
38-6 OO Tri-Lock Revetment
38-6PP Grouted Riprap Sections
38-6QQ Required Blanket Thickness as a Function of Flow Velocity
38-6RR Recommended Grading of Grouted Rock Slope Protection
38-6SS Grouted Fabric-Formed Revetment (Type 1)
38-6TT Grouted Fabric-Formed Revetment (Type 2)
38-6UU (figure deleted)
38-6VV (figure deleted)

CHAPTER THIRTY-EIGHT

BANK PROTECTION

38-1.0 INTRODUCTION

38-1.01 Purpose

One of the hazards of placing a highway near a river or stream channel or other water body is the potential for erosion of the highway embankment by moving water. If erosion of the highway embankment is to be prevented, bank protection must be anticipated, and the proper type and amount of protection must be provided in the right locations.

The available methods of protecting a highway embankment from bank erosion are as follows:

1. relocating the highway away from the stream or water body;
2. moving the water body away from the highway (channel change);
3. changing the direction of the current with training works; and
4. protecting the embankment from erosion.

This Chapter provides procedures for the design of revetment to be used as channel-bank protection, and channel lining on a larger stream or river (i.e., that having a design discharge greater than 1.4 m^3/s). Procedures are also provided for riprap protection at a bridge pier or abutment. For a small discharge, the procedures provided in Chapter Thirty should be used. Emphasis in this Chapter has been placed on rock riprap revetment due to its cost, environmental considerations, flexible characteristics, and widespread acceptance. Other channel-stabilization methods such as spurs, guide-bank retard structures, longitudinal dikes, and bulkheads are discussed in *Stream Stability at Highway Structures*, Hydraulic Engineering Circular No. 20.

38-1.02 Erosion Potential

Channel and bank stabilization is essential to the design of a structure affected by the water environment. The identification of the potential for bank erosion, and the subsequent need for stabilization, is best accomplished through observation. A three-level analysis procedure is provided in Hydraulic Engineering Circular No. 20. This procedure is described in Chapter Thirty. The three-level analysis provides a procedure for determining the geomorphological characteristics, evaluating the existing conditions through field observations, and determining the hydraulic and sediment transport properties of the stream. If sufficient information is obtained at

a given level of the analysis to solve the problem, the procedure may be stopped without proceeding to the other levels.

Observations provide the most positive indication of erosion potential. Observation comparison can be based on historic information or current site conditions. Aerial photographs, old maps, surveying notes, bridge-design files, and river-survey data available at the INDOT Central Office and at Federal agencies. Gaging-station records and interviews of long-time residents can provide documentation of recent and potentially current channel movement or bank instabilities.

Current site conditions can be used to evaluate stability. If historic information indicates that a bank has been relatively stable in the past, local conditions may indicate more recent instabilities. Local site conditions which are indicative of instabilities may include tipping and falling of vegetation along the bank, cracks along the bank surface, the presence of slump blocks, fresh vegetation laying in the channel near the channel banks, deflection of channel flows in the direction of the bank due to a recently deposited obstruction or channel-course change, fresh vertical face cuts along the bank, locally high velocities along the bank, new bar formation downstream from an eroding bank, local headcuts, pending or recent cutoffs, etc. The presence of one of these conditions does not in itself indicate an erosion problem. Bank erosion is common in each channel if the channel is stable.

38-1.03 Symbols and Definitions

To provide consistency within this Chapter and throughout this *Manual*, the symbols in Figure 38-1A will be used. These symbols were selected because of their wide use in bank- and shore-protection publications. Where the same symbol is used for more than one definition, the symbol will be defined where it is used.

38-2.0 POLICY

A highway alignment or improvement can cross, encroach upon, or otherwise require construction of a new channel or modification of the existing channel. It is necessary to protect the public, the highway investment, and the environment from the natural reaction to the highway changes. Department policy requires that the facility, including bank protection, will perform without significant damage or hazard to people and property for flood and flow conditions experienced on a 100-year recurrence interval. The facility, to the maximum extent possible, should perpetuate natural drainage conditions thus protecting and maintaining the environment.

38-3.0 BANK- AND LINING-FAILURE MODES

38-3.01 Potential Failures

Prior to designing a bank-stabilization scheme, the common erosion mechanisms and revetment-failure modes, and the causes or driving forces behind bank erosion processes should be known. Inadequate recognition of potential erosion processes at a particular site may lead to failure of the revetment system.

Many causes of bank erosion and revetment failure have been identified. The more-common causes include abrasion, debris flows, water flow, eddy action, flow acceleration, unsteady flow, freeze-and-thaw, human actions on the bank, ice, precipitation, waves, toe erosion, and subsurface flow. However, it is most often a combination of mechanisms which cause bank or revetment failure, and the actual mechanism or cause is difficult to determine. Failures are classified by mode as follows:

1. particle erosion;
2. translational slide;
3. modified slump; and
4. slump.

38-3.02 Particle Erosion

Particle erosion is the most commonly considered erosion mechanism. Particle erosion results if the tractive force exerted by the flowing water exceeds the bank material's ability to resist movement. If displaced stones are not transported from the eroded area, a mound of displaced rock will develop on the channel bed. The mound has been observed to cause flow concentration along the bank, resulting in further bank erosion.

One type of particle erosion results in loss of the underlying material, resulting in undermining and eventual collapse of the revetment protection. The underlying material is lost through the revetment, or is piped under the toe of the revetment protection. This failure is common in and is damaging to a rigid type of protective lining. Providing a suitable filter, either natural or fabrics, in conjunction with a hydrostatic relief feature, will prevent this failure.

Another type of particle erosion failure occurs at the edges of the protective feature. The interface creates turbulence which in turn increases the tractive stresses placed on the protective layer, underlying layers and the natural bank material beyond the revetment. However, extension of the protective feature moves, not eliminates, the failure.

38-3.03 Translational Slide

A translational slide is a failure of riprap caused by the downslope movement of a mass of stones, with the fault line on a horizontal plane. The initial phases of a translational slide are indicated by cracks in the upper part of the riprap bank that extend parallel to the channel. As the slide progresses, the lower part of the riprap separates from the upper part and moves downslope as a homogeneous body. A resulting bulge may appear at the base of the bank if the channel bed is not scoured.

38-3.04 Modified Slump

The failure of riprap referred to as modified slump is the mass movement of material along an internal slip surface within the riprap blanket. The underlying material supporting the riprap does not fail. This type of failure is similar to the translational slide, but the geometry of the damaged riprap is similar in shape to initial stages of failure caused by particle erosion.

38-3.05 Slump

Slump is a rotational-gravitational movement of material along a surface of rupture that has a concave upward curve. The cause of a slump failure is related to shear failure of the underlying base material that supports the riprap revetment. The primary feature of a slump failure is the localized displacement of base material along a slip surface, which is caused by excess pore pressure that reduces friction along a fault line in the base material.

38-4.0 REVETMENT TYPES

38-4.01 Common Types

The types of slope protection or revetment used for bank or shore protection and stabilization include the following:

1. rock and rubble riprap;
2. wire-enclosed rock (gabions);
3. preformed blocks;
4. grouted rock;
5. grouted fabric;
6. sand or cement bags; and
7. soil cement.

38-4.02 Riprap

Riprap is a layer or facing of rock, dumped or hand-placed to prevent erosion, scour, or sloughing of a structure or embankment. Materials other than rock are also referred to as riprap. These include rubble, broken concrete slabs, or preformed-concrete shapes such as slabs, blocks, rectangular prisms, etc. These materials are similar to rock in that they can be hand-placed or dumped onto an embankment to form a flexible revetment. The depth of riprap should be taken as 450 mm.

38-4.03 Wire-Enclosed Rock

A wire-enclosed rock, or gabion, revetment consists of rectangular wire mesh baskets filled with rock. This revetment is formed by filling pre-assembled wire baskets with rock and anchoring them to the channel bottom or bank. A wire-enclosed rock revetment is either a rock-and-wire mattress, or blocks. In a mattress, the individual wire-mesh units are laid end to end and side to side to form a mattress layer on the channel bed or bank. The gabion baskets comprising the mattress have a depth dimension which is much smaller than its width or length. A block gabion is more equal-dimensional, having a depth that is approximately the same as its width and of the same order of magnitude as its length. It is rectangular or trapezoidal in shape. A block gabion revetment is formed by stacking individual gabion blocks in a stepped fashion.

38-4.04 Precast-Concrete Block

The preformed sections which comprise the revetment system are butted together or joined. As such, they form a continuous blanket or mat. The concrete blocks which make up the mats differ in shape and method of articulation but share certain common features. The features include flexibility, rapid installation, and provisions for establishment of vegetation within the revetment. The permeable nature of this revetment permits free draining of the bank materials. The flexibility, although limited, allows the mattress to conform to minor changes in the bank geometry. Its limited flexibility, however, subjects it to undermining in an environment characterized by large and relatively rapid fluctuations in the surface elevation of the channel bed or bank. Unlike wire-enclosed rock, the open nature of precast-concrete blocks does promote volunteering of vegetation within the revetment.

38-4.05 Grouted Riprap

Grouted riprap consists of rock-slope protection having voids filled with concrete grout to form a monolithic armor. Grouted riprap is a rigid revetment. It will not conform to changes in the bank geometry due to settlement. As with a monolithic revetment, grouted riprap is susceptible to failure from undermining and the subsequent loss of the supporting bank material. Although it is rigid, grouted riprap is not extremely strong. Therefore, the loss of a small area of bank support can cause failure of large portions of the revetment. See the INDOT *Standard Specifications* for more information.

38-4.06 Grouted Fabric Slope Pavement

A grouted fabric slope pavement revetment is constructed by injecting sand-cement mortar between two layers of double-woven fabric which has first been positioned on the slope to be protected. Mortar may be injected into this fabric envelope either underwater or in-the-dry. The fabric enclosure prevents dilution of the mortar during placement underwater. The two layers of fabric act first as the top and bottom form to hold the mortar in place while it hardens. The fabric, to which the mortar remains tightly bonded, then acts as tensile reinforcing to hold the mortar in place on the slope. This revetment is analogous to slope paving with reinforced concrete. The bottom layer of fabric acts as a filter cloth underlayment to prevent loss of soil particles through cracks which may develop in the revetment as a result of soil subsidence. Greater relief of hydrostatic uplift is provided by weep holes or filter points which are woven into the fabric and remain unobstructed by mortar during the filling operation.

38-4.07 Sand-Cement Bags

Sand-cement bags consist of a dry mix of sand and cement placed in a burlap or other suitable bag. They are hand placed in contact with adjacent bags. They require firm support from the protected bank. A filter fabric is placed underneath this type of revetment. Adequate protection of the terminals and toe is essential. The revetment has little flexibility, low tensile strength, and is susceptible to damage, particularly on a relatively flat slope where the area of contact between the bags is less.

38-4.08 Soil Cement

Soil cement consists of a dry mix of sand, cement, and admixtures batched in a central mixing plant. It is transported, placed with equipment capable of producing the width and thickness required, and compacted to the required density. Control of the moisture and time after introduction of the mixing water is critical. Curing is required. This results in a rigid protection. Soil cement can be placed either as a lining or in stepped horizontal layers. The stepped horizontal layers are stable provided toe scour protection has been incorporated into the design.

38-5.0 DESIGN CONCEPTS

38-5.01 Introduction

Concepts related to the design of bank protection are discussed below.

38-5.02 Design Discharge

The design flow rate for the design or analysis of a highway structure in the vicinity of a river or stream has a 10- to 100-year recurrence interval. This discharge level will also be applicable to the design of a revetment system. However, a lower discharge may produce hydraulically-worse conditions with respect to riprap stability. Several discharge levels be evaluated to ensure that the design is adequate for all discharge conditions up to that selected as the design discharge for a structure associated with the riprap scheme.

38-5.03 Flow Types

Open-channel flow can be classified as follows:

1. uniform, gradually-varying, or rapidly-varying flow;
2. steady or unsteady flow; and
3. subcritical or supercritical flow.

The design relationships described herein are based on the assumption of uniform, steady, subcritical flow. The relationships are also valid for gradually-varying flow conditions. Although the individual hydraulic relationships are not in themselves applicable to rapidly-varying, unsteady, or supercritical flow conditions, procedures are provided for extending their use to these flow conditions. See Chapter Thirty for more information related to channel design.

A rapidly-varying, unsteady flow condition is common in an area of flow expansion, flow contraction, or reverse flow. These conditions are common at and immediately downstream of a bridge. A supercritical or near-supercritical flow condition is common at a bridge constriction or a steeply-sloped channel.

Non-uniform, unsteady, and near-supercritical flow conditions create stresses on the channel boundary that are significantly different from those induced by uniform, steady, subcritical flow. These stresses are difficult to assess quantitatively. The stability-factor method of riprap design

provided in Section 38-6.0 provides a means of adjusting the final riprap design which is based on relationships derived for steady, uniform, subcritical flow for the uncertainties associated with the other flow conditions. The adjustment is made through the assignment of a stability factor. The magnitude of the stability factor is based on the level of uncertainty inherent in the design-flow conditions.

38-5.04 Section Geometry

The design procedures described herein require as input channel cross-section geometry. The cross-section geometry is necessary to establish the hydraulic design parameters (flow depth, top width, velocity, hydraulic radius, etc.) required by the riprap-design procedures, and to establish a construction cross section for placement of the revetment material. Where the entire channel perimeter will be stabilized, the selection of appropriate channel geometry is only a function of the desired channel conveyance properties and limiting geometric constraints. However, where the channel bank alone will be protected, the design must consider the existing channel-bottom geometry.

The development of an appropriate channel section for analysis is subjective. The intent is to develop a section which reasonably simulates a worst-case condition with respect to riprap stability. Information which can be used to evaluate channel geometry includes current channel surveys, past channel surveys (if available), and current and past aerial photos. The effect that channel stabilization will have on the local channel section must be considered.

The first problem arises if an attempt is made to establish an existing channel bottom profile for use in design. A single channel profile is not enough to establish the design cross section. In addition to current-channel surveys, historic surveys can provide valuable information. A comparison of current and past channel surveys at the location provides information on the stability of the site and a history of past channel-geometry changes. Past surveys for a particular site may not be available. If so, past surveys at other sites in the vicinity of the design location may be used to evaluate past changes in channel geometry.

38-5.05 Flow In Channel Bend

Flow conditions in a channel bend are complicated by the distortion of flow patterns in the vicinity of the bend. In a long, relatively straight channel, the flow conditions are uniform and symmetrical about the centerline of the channel. However, in a channel bend, the centrifugal forces and secondary currents produced can lead to non-uniform and non-symmetrical flow conditions.

The increased velocities and shear stresses that are generated as a result of non-uniform flow should be considered in a bend.

Superelevation of flow in a channel bend should be considered in the revetment design. Although the magnitude of superelevation is small if compared with the overall flow depth in the bend (less than 0.3 m), it should be considered in establishing freeboard limits for a bank-protection scheme on a sharp bend. The magnitude of superelevation at a channel bend may be estimated for subcritical flow from the equation as follows:

$$Z = \frac{CV_a^{\,2}T}{gR_o} \qquad \text{(Equation 38-5.1)}$$

Where: Z = superelevation of the water surface, m
C = coefficient that relates free vortex motion to velocity streamline for unequal radii of curvature
V_a = mean channel velocity, m/s
T = water-surface width at section, m
g = gravitational acceleration, 9.81 m/s^2)
R_o = mean radius of the channel centerline at the bend, m

The coefficient C has been evaluated by the U.S. Geological Survey (USGS), and ranges from 0.5 to 3.0, with an average value of 1.5.

38-5.06 Flow Resistance

The hydraulic analysis performed as a part of the riprap-design process requires the estimation of Manning's roughness coefficient. Physical characteristics upon which the resistance equations are based include the channel base material, surface irregularities, variations in section geometry, bed form, obstructions, vegetation, channel meandering, flow depth, and channel slope. Seasonal changes in these factors must also be considered. See Chapter Thirty for a discussion on the selection of Manning's *n* value.

38-5.07 Extent of Protection

Extent of protection refers to the longitudinal and vertical extent of protection required to adequately protect the channel bank.

38-5.07(01) Longitudinal Extent

The longitudinal extent of protection required for a particular bank protection scheme is dependent on local site conditions. The revetment should be continuous for a distance greater than the length that is impacted by channel-flow forces severe enough to cause dislodging or transport of bank material. Although this is a vague criterion, it should be considered. Review of existing bank-protection sites has revealed that a common misconception in stream-bank protection is to provide protection too far upstream and not far enough downstream.

One criterion for establishing the longitudinal limits of protection required is illustrated in Figure 38-5A. As illustrated, the minimum distances recommended for bank protection are an upstream distance of 1 channel width, and a downstream distance of 1.5 channel widths from corresponding reference lines. All reference lines pass through tangents to the bend at the bend entrance or exit. This criterion is based on an analysis of flow conditions in symmetric channel bends under ideal laboratory conditions. Real-world conditions are not as simplistic.

Many site-specific factors have an effect on the actual length of bank that should be protected. The designer will determine that the above criteria are difficult to apply on a mildly-curving bend or on a channel having irregular, non-symmetric bends. Other channel controls such as bridge abutments can be producing a stabilizing effect on the bend so that only a part of the channel bend needs to be stabilized. The magnitude or nature of the flow event can only cause erosion problems in a localized portion of the bend, requiring that only a short channel length be stabilized. Therefore, the above criteria should only be used as a starting point. Additional analysis of site-specific factors is necessary to define the actual extent of protection required.

Field reconnaissance useful for the evaluation of the longitudinal extent of protection required, particularly if the channel is actively eroding. In a straight channel reach, scars on the channel bank may be useful to help identify the limits required for channel-bank protection. The upstream and downstream limits of the protection scheme should be extended a minimum of 1 channel width beyond the observed erosion limits.

In a curved channel reach, the scars on the channel bank can be used to establish the upstream limit of erosion. A minimum of 1 channel width should be added to the observed upstream limit to define the limit of protection. The downstream limit of protection required in a curved channel reach is more difficult to define. Because the natural progression of bank erosion is in the downstream direction, the present visual limit of erosion may not define the ultimate downstream limit. Additional analysis based on consideration of flow patterns in the channel bend may be required.

38-5.07(02) Vertical Extent

The vertical extent of protection required of a revetment includes design height and foundation or toe depth.

1. Design Height. The design height of a riprap installation should be equal to the design highwater elevation plus an allowance for freeboard. Freeboard is provided in a causeway situation to ensure that the desired degree of protection will not be reduced due to unaccounted factors, including the following:

   a. wave action from wind or boat traffic;
   b. superelevation in channel bends;
   c. hydraulic jumps; and
   d. flow irregularities due to piers, transitions, or flow junctions.

   Erratic phenomena such as unforeseen embankment settlement, the accumulation of silt, trash, debris in the channel, aquatic or other growth in the channel, and ice flows should be considered in setting the freeboard height. Wave runup on the bank must be considered.

   The prediction of wave height from a boat-generated wave is not as straightforward as other wave sources. Figure 38-5B provides a definition sketch for the wave-height discussion to follow. The height of a boat-generated wave must be estimated from observations.

   It is necessary to estimate the magnitude of wave runup which results if waves impact the bank. Wave runup is a function of the design-wave height, the wave period, bank angle, and the bank-surface characteristics (as represented by different revetment materials). For a wave height of less than 0.6 m, wave runup can be computed using Figures 38-5C and 38-5D. The runup height, *R*, shown in Figure 38-5D is for concrete pavement. Correction factors are provided in Figure 38-5C for reducing the runup magnitude for other revetment materials. The correction factor is multiplied by the wave height to obtain *R*.

   The factors to be considered in the selection of an appropriate freeboard height are described below. As a minimum, a freeboard elevation of 0.3 m to 0.6 m should be used in an unconstricted reach, or 0.6 m to 0.9 m in a constricted reach. The Federal Emergency Management Agency requires 0.9 m for levee protection, or 1.2 m at a bridge for a 100-year flood. If computational procedures indicate that additional freeboard may be required, the greater height should be used. Wave and flow conditions should be observed during various seasons of the year, if possible. Consult existing records, and interview persons who have knowledge of past conditions in establishing the necessary vertical extent of protection required for a particular revetment installation.

2. Toe Depth. The undermining of revetment-toe protection has been identified as one of the mechanisms of revetment failure. In the design of bank protection, estimates of the

depth of scour are needed so that the protective layer is placed sufficiently low in the streambed to prevent undermining. The ultimate depth of scour must consider channel degradation and natural scour and fill processes.

The relationships provided in Equations 38-5.2 and 38-5.3 below can be used to estimate the probable maximum depth of scour due to the natural scour and fill phenomenon in a straight channel or in a channel having mild bends. In application, the depth of scour, d_s, should be measured from the lowest elevation in the cross section. The low point in the cross section may eventually move adjacent to the protection if this is not shown in the current survey.

$\underline{d_s}$ = 3.66 m for D_{50} < 1.5 mm (Equation 38-5.2)

$d_s = 3.72 D_{50}^{-0.11}$ for D_{50} > 1.5 mm (Equation 38-5.3)

Where: d_s = estimated probable maximum depth of scour, m
D_{50} = median diameter of bed material, mm

If D_{50} is in meters, $d_s = 1.738 D_{50}^{-0.11}$.

The depth of scour predicted from Equations 38-5.2 and 38-5.3 must be added to the magnitude of predicted degradation and local scour to arrive at the total required toe depth.

38-6.0 DESIGN GUIDELINES

38-6.01 Rock Riprap

Guidelines are provided for bank slope, rock size, rock gradation, riprap layer thickness, filter design, edge treatment, and construction considerations. Construction details are illustrated. The guidelines apply equally to rock or rubble riprap.

38-6.01(01) Bank Slope

A primary consideration in the design of a stable riprap bank-protection scheme is the slope of the channel bank. For a riprap installation, the maximum recommended face slope is 2H:1V. Although not recommended, the steepest slope acceptable for rubble revetment is 1.5H:1V. To be stable under an identical wave attack or lateral velocity, a rubble revetment with a steep slope will need larger rubble sizes and greater thicknesses than one with a flatter slope.

38-6.01(02) Rock Size

The stability of a particular riprap particle is a function of its size, expressed either in terms of its weight or equivalent diameter. Relationships are provided for evaluating the riprap size required to resist particle and wave-erosion forces.

1. Particle Erosion. The methods used to evaluate a material's resistance to particle erosion are the permissible-velocity approach and the permissible tractive-force (shear stress) approach. In the permissible-velocity approach, the channel is assumed stable if the computed mean velocity is lower than the maximum permissible velocity. The tractive-force (boundary-shear stress) approach focuses on stresses developed at the interface between flowing water and materials forming the channel boundary.

2. Design Relationship. A riprap-design relationship that is based on tractive-force theory with velocity as its primary design parameter is provided in Equation 38-6.1. The design relationship in Equation 38-6.1 below is based on the assumption of uniform, gradually-varying flow. Figure 38-6A provides a graphical solution to Equation 38-6.1. Equation 38-6.2 can be solved using Figures 38-6B and 38-6C.

$$D_{50} = \frac{0.00594 V_a^{\ 3}}{\left(d_{avg}\right)^{0.5}\left(K_1\right)^{1.5}} \qquad \text{(Equation 38-6.1)}$$

Where: D_{50} = median riprap particle size, m
C = correction factor, described below
V_a = average velocity in the main-flow channel, m/s
d_{avg} = average flow depth in the main-flow channel, m

K_1 is defined as follows:

$$K_1 = \left(1 - \frac{\sin^2\theta}{\sin^2\phi}\right)^{0.5} \qquad \text{(Equation 38-6.2)}$$

Where: θ = bank angle with the horizontal
φ = riprap material's angle of repose.

The average flow depth and velocity used in Equation 38-6.1 are main channel values. The main channel is defined as the area between the channel banks (see Figure 38-6D).

Equation 38-6.1 is based on a rock-riprap specific gravity of 2.65 and a stability factor of 1.2. Equations 38-6.3 and 38-6.4 provide correction factors for other specific gravities and stability factors as follows:

$$C_{sg} = \frac{2.12}{(S_s - 1)^{1.5}} \qquad \text{(Equation 38-6.3)}$$

Where S_s = specific gravity of rock riprap.

$$C_{sf} = \left(\frac{SF}{1.2}\right)^{1.5} \qquad \text{(Equation 38-6.4)}$$

Where SF = stability factor to be applied.

The correction factors computed using Equations 38-6.3 and 38-6.4 are multiplied together to form a single correction factor, *C*. This correction factor is then multiplied by the riprap size computed from Equation 38-6.1 to arrive at a stable riprap size. Figure 38-6E provides a solution to Equations 38-6.3 and 38-6.4 using correction factor *C*.

The stability factor, *SF*, used in Equation 38-6.4 is defined as the ratio of the average tractive force exerted by the flow field and the riprap material's critical shear stress. As long as the stability factor is greater than 1, the critical shear stress of the material is greater than the flow-induced tractive stress, and the riprap is considered to be stable. A stability factor of 1.2 was used in the development of Equation 38-6.1.

The stability factor is used to reflect the level of uncertainty in the hydraulic conditions at a particular site. Equation 38-6.1 is based on the assumption of uniform or gradually varying flow. This assumption can be violated or other uncertainties can occur, such as debris or ice impacts, the cumulative effect of high shear stresses, or forces from boat-generated waves. The stability factor is used to increase the design rock size if these conditions must be considered. Figure 38-6F provides guidelines for the selection of an appropriate value for the stability factor.

3. Application. Application of the relationship in Equation 38-6.1 is limited to a uniform or gradually-varying flow condition that is in a straight or mildly-curving channel reach of relatively uniform cross section. The relationship is also applicable in a non-uniform, rapidly-varying flow condition exhibited in a natural channel with sharp bends and steep slopes, or in the vicinity of a bridge pier or abutment.

To fill the need for a design relationship that can be applied at a sharp bend or on steep slopes in a natural channel or at a bridge abutment, Equation 38-6.1 should be used with appropriate adjustments in the velocity or stability factor as described below.

4. Steep Slopes. The flow condition in a steep-sloped channel is rarely uniform. It is characterized by high flow velocity and significant flow turbulence. In applying Equation 38-6.1 to a steep-sloped channel, the appropriate velocity must be determined. In determining the flow velocity, Equation 38-6.5 must be used to determine the channel's roughness coefficient. The selection of the stability factors shown in Figure 38-6F must be considered..

For a high-gradient stream, it is difficult to obtain an estimate of the median-bed material size. If the stream slope is steeper then 0.2% and the bed material is larger than 0.06 m (gravel, cobble, or boulder-size material), the relationship shown in the following equation be used to evaluate the base Manning's *n*.

$$n = 0.32\, S_f^{0.38}\, R^{-0.16} \qquad \text{(Equation 38-6.5)}$$

Where: S_f = friction slope
R = hydraulic radius, m

5. Bridge Pier. For recommendations, see Chapter Thirty-two.

6. Wave Erosion. Waves generated by boat traffic have also been observed to cause bank erosion on an inland waterway. The most widely-used measure of riprap's resistance to waves is that developed by R. Y. Hudson, *Laboratory Investigations of Rubble-Mound Breakwaters*, 1959. The Hudson relationship is described in the equation as follows:

$$W_{50} = \frac{\gamma_s H^3}{2.2 \cot\theta (S_s - 1)^3} \qquad \text{(Equation 38-6.6)}$$

Where: W_{50} = weight of median particle, kg

γ_s = unit weight of riprap (solid) material, kg/m^3 (other parameters are as defined previously)

H = wave height, m

S_s = specific gravity of riprap material

θ = bank angle with the horizontal

Assuming S_s = 2.65 and γ_s = 2643 kg/m^3, Equation 38-6.6 can be reduced to the following:

$$W_{50} = \frac{267.4H^3}{\cot\theta} \qquad \text{(Equation 38-6.7)}$$

In terms of an equivalent diameter, Equation 38-6.7 can be reduced to the following:

$$D_{50} = \frac{0.75H}{\cot^{0.33}\theta} \qquad \text{(Equation 38-6.8)}$$

Where D_{50} = median riprap size, m.

Methods for estimating a design wave height are provided in Section 38-5.07. Equation 38-6.8 is provided in nomograph form in Figure 38-6G. Equations 38-6.7 and 38-6.8 can be used for preliminary or final design where H is less than 1.5 m, and there is no major overtopping of the embankment.

7. Ice Damage. Ice can affect riprap linings. Moving surface ice can cause crushing and bending forces and large impact loadings. The tangential flow of ice along a riprap-lined channel bank can also cause excessive shearing forces. Quantitative criteria for evaluating the impact ice has on a channel-protection scheme are unavailable. However, historic observations of ice flows in New England rivers indicate that riprap sized to resist a design flow event will also resist ice forces.

   For design, consideration of ice forces should be evaluated as required for each project. Ice flows are not of sufficient magnitude to warrant detailed analysis. Where ice flows have historically caused problems, a stability factor of 1.2 to 1.5 should be used to increase the design rock size. The selection of an appropriate stability factor to account for ice-generated erosive problems should be based on local experience.

38-6.01(03) Rock Gradation

The gradation of stones in riprap revetment affects the riprap's resistance to erosion. The stone should be well-graded throughout the riprap-layer thickness. The gradation limits should not be so restrictive that production costs are excessive. Figure 38-6H provides suggested guidelines for establishing gradation limits. Figure 38-6J can be used as an aid in selecting appropriate gradation limits.

The use of a four-point gradation as specified in Figure 38-6H can be too harsh a requirement for a smaller quarry. If so, the 85% requirement can be dropped as is done in Figure 38-6 I. A uniform gradation between D_{50} and D_{100} will likely result in an appropriate D_{85}.

38-6.01(04) Layer Thickness

All stones should be contained within the riprap-layer thickness to provide maximum resistance against erosion. Oversized stones in isolated locations may cause riprap failure by precluding mutual support between individual stones, providing large voids that expose filter and bedding materials, and creating excessive local turbulence that removes smaller stones. Small amounts of oversized stones should be removed individually and replaced with proper-size stones. The following criteria apply to the riprap layer thickness.

1. It should not be less than the spherical diameter of the D_{100} (W_{100}) stone, or less than two times the spherical diameter of the D_{50} (W_{50}) stone, whichever results in the greater thickness.

2. It should not be less than 300 mm for practical placement.

3. The thickness determined by either Item 1 or 2 above should be increased by 50 percent if the riprap is placed underwater to provide for uncertainties associated with this type of placement.

4. An increase in thickness of 150 mm to 300 mm, accompanied by an appropriate increase in stone sizes, should be provided where riprap revetment will be subject to attack by floating debris or ice or by waves from boat wakes, wind, or bedforms.

38-6.01(05) Filter Design

A filter is a transitional layer of gravel, small stones, or fabric placed between the underlying soil and the structure. The filter prevents the migration of the fine soil particles through voids in the structure, distributes the weight of the armor units to provide more uniform settlement, and permits relief of hydrostatic pressures within the soils. A filter should be used where the riprap is placed on non-cohesive material subject to significant subsurface drainage, such as where the water-surface level frequently fluctuates, or in an area of high groundwater level.

1. <u>Granular Filter</u>. For rock riprap, a filter ratio of 5 or less between layers will result in a stable condition. The filter ratio is defined as the ratio of the 15-percent particle size, D_{15}, of the coarser layer to the 85-percent particle size, D_{85}, of the finer layer. The ratio of the 15-percent particle size of the coarser material to the 15-percent particle size of the finer

material should exceed 5 but should be less than 40. This requirement can be stated as follows:

$$\frac{D_{15}(coarser\ layer)}{D_{85}(finer\ layer)} < 5 < \frac{D_{15}(coarser\ layer)}{D_{15}(finer\ layer)} < 40 \qquad \text{(Equation 38-6.9)}$$

The first test of the inequality is intended to prevent piping through the filter. The second test provides for adequate permeability for structural bedding layers. The right-hand portion provides a uniformity criterion.

If a single layer of filter material will not satisfy the filter requirements, one or more additional layers of filter material must be used. The filter requirement applies between the bank material and the filter blanket, between successive layers of filter material if more than one layer is used, and between the filter blanket and the riprap cover. In addition to the filter requirements, the grain-size curves for the various layers should be approximately parallel to minimize the infiltration of fine material from the finer layer to the coarser layer. Not more than 5 percent of the filter material should pass the 75-µm sieve. Figures 38-6J and 38-6K can be used as an aid in designing an appropriate granular filter. An editable version of Figure 38-6K may also be found on the Department's website at www.in.gov/dot/div/contracts/design/dmforms/.

The thickness of the filter blanket should range from 150 mm to 450 mm for a single layer, or from 100 mm to 200 mm for individual layers of a multiple layer blanket. Where the gradation curves of adjacent layers are approximately parallel, the thickness of the blanket layers should approach the minimum. The thickness of individual layers should be proportionately increased above the minimum as the gradation curve of the material comprising the layer departs from a parallel pattern.

2. Geotextile Filter. A synthetic geotextile filter may be used use as an alternative to a granular filter. See Figure 38-6L. Since the original geotextile erosion control application in 1957, thousands of successful projects have been completed. The advantages relevant to using a geotextile filter are as follows.

   a. Installation is quick and labor efficient.

   b. A geotextile filter is more economical than a granular filter.

   c. A geotextile filter has consistent and more-reliable material quality.

   d. A geotextile filter has high inherent tensile strength.

e. Local availability of suitable granular-filter material is no longer a design consideration in using a fabric filter.

Disadvantages include the following.

a. Geotextiles can be difficult to install underwater.

b. Geotextiles have widely-variable hydraulic properties and must be designed based on project-specific conditions and performance requirements.

c. Geotextile-filter performance is sensitive to construction procedures.

d. Special installation or inspection procedures may be necessary in using a geotextile filter.

3. Geotextile-Filter Design The design follows traditional graded granular-filter design principles and should consider the following:

a. soil retention (piping resistance);
b. permeability;
c. clogging; and
d. survivability.

Individual site conditions and performance requirements should be established in conjunction with the geotextile design. Generalized geotextile requirements should be used only for a very small or non-critical/non-severe installation where a detailed analysis is not warranted. AASHTO has developed materials and construction specifications (AASHTO Specification M 288) for a routine, non-critical/non-severe geotextile application. Geotextile-filter design requirements, for all levels of project severity and criticality, are provided in the Federal Highway Administration publication *Geosynthetic Design and Construction Guidelines*, (FHWA-HI-95-038). This reference provides guidance on specifying and installing geotextiles for a variety of transportation applications. The American Society for Testing and Materials Committee D-35 has developed standard testing procedures for approximately 35 general, index, and performance properties of geosynthetics. These standard test procedures are recommended for use in the design if using geosynthetics.

The following design steps are necessary for geotextile design in riprap or another permanent-erosion-control application.

Step 1: Evaluate the application site (determine if the application is critical or severe).

Step 2: Obtain and test soil samples (perform grain size analysis and permeability tests).

Step 3: Evaluate possible armor material and placement procedures.

Step 4: Calculate anticipated reverse flow through the erosion control system.

Step 5: Determine geotextile requirements as follows:

(1) soil retention;
(2) permeability/permittivity;
(3) clogging; and
(4) survivability.

Step 6: Estimate cost and prepare specifications.

4. Geotextile Installation Procedure. A properly-selected cloth should be installed with regard to the following precautions.

a. Grade the area and remove debris to provide a smooth, fairly even surface.

b. Place geotextile loosely, lay with the machine (generally roll) direction in the direction of anticipated water flow or movement.

c. Seam or overlap the geotextile as required.

d. The maximum allowable slope on which a riprap-geotextile system can be placed is equal to the lowest soil-geotextile friction angle for the natural ground or stone-geotextile friction angle for cover or armor materials. Additional reductions in slope may be necessary due to hydraulic considerations and possible long-term stability. For a slope steeper than 2.5H:1V, special construction procedures will be required.

e. For a streambank or wave-action application, the geotextile must be keyed in at the bottom of the slope. If the system can not be extended about 3 m above the anticipated high-water level, the geotextile should also be keyed in at the crest of the slope.

f. Place the revetment cushion layer or riprap over the geotextile width while avoiding puncturing it.

38-6.01(06) Edge Treatment

The edges of a riprap revetment (flanks, toe, and head) require a treatment to prevent undermining. The flanks of the revetment should be designed as illustrated in Figure 38-6M. The upstream flank is illustrated in section (a) and the downstream flank in section (b) of the figure. A more constructible flank section uses riprap rather than compacted fill.

Undermining of the revetment toe is one of the primary mechanisms of riprap failure. The toe of the riprap should be designed as illustrated in Figure 38-6N. The toe material should be placed in a toe trench along the entire length of the riprap blanket.

Where a toe trench cannot be dug, the riprap blanket should terminate in a thick, stone toe at the level of the streambed (see alternate design in Figure 38-6N). The toe material should not mound and form a low dike. A low dike along the toe can result in flow concentration along the revetment face which can stress the revetment to failure. The channel's design capability should not be impaired by placement of too much riprap in a toe mound.

The size of the toe trench or the alternate stone toe is controlled by the anticipated depth of scour along the revetment. As scour occurs, the stone in the toe will launch into the eroded area as illustrated in Figure 38-6 O. Observation of the performance of this type of rock toe indicates that the riprap will launch to a final slope of approximately 2H:1V.

The volume of rock required for the toe must be equal to or exceed one and one-half times the volume of rock required to extend the riprap blanket (at its design thickness and on a slope of 2H:1V) to the anticipated depth of scour. Dimensions should be based on the required volume using the thickness and depth determined from the scour evaluation. The alternate location can be used if the amount of rock required does not constrain the channel. Establishing a design scour depth is described in Section 38-5.07.

38-6.01(07) Construction Considerations

Construction considerations related to a riprap revetment include bank slope or angle, bank preparation, and riprap placement.

1. Bank Preparation. The bank should be prepared by clearing all trees and debris from the bank and grading the bank surface to the desired slope. The graded surface should not deviate from the specified slope line by more than 150 mm. However, a local depression larger than this can be accommodated because initial placement of filter material or rock for the revetment will fill such a depression. Large boulders or debris found buried near the edges of the revetment should be removed.

2. Riprap Placement. The common methods of riprap placement are hand placing; machine placing, such as from a skip, dragline, or bucket; and dumping from trucks and spreading by bulldozer. Hand placement produces the best riprap revetment, but it is the most expensive method except if labor is inexpensive. Steeper side slopes can be used with hand-placed riprap more so than with another placement method. Where steep slopes are unavoidable (the channel width is constricted by an existing bridge opening or other structure, and right of way is costly), hand placement should be considered.

In the machine-placement method, sufficiently small increments of stone should be released as close to their final positions as practical. Rehandling or dragging operations to smooth the revetment surface tend to result in segregation and breakage of stone and can result in a rough revetment surface. Stone should not be dropped from an excessive height because this may result in the same undesirable conditions. Riprap placement by dumping and spreading is satisfactory, provided the required layer thickness is achieved. However, this is the least-desirable method, as a large amount of segregation and breakage can occur. It may be economical to increase the layer thickness and stone size somewhat to offset the shortcomings of this placement method.

38-6.01(08) Design Procedure

The rock-riprap design procedure described below consists of preliminary data analysis, rock sizing, and revetment-detail design. Figures 38-6P and 38-6Q provide a useful format for recording data at each step of the analysis. Editable versions of these forms may also be found on the Department's website at www.in.gov/dot/div/contracts/design/dmforms/.

1. Compile all necessary field data including channel cross section surveys, soils data, aerial photographs, history of problems at site, etc.

2. Determine design discharge.

3. Develop design cross sections. The rock-sizing procedure described herein is intended to prevent riprap failure from particle erosion.

4. Compute design water surface as follows.

    a. In evaluating the design water surface, Manning's *n* should be estimated. If a riprap lining is being designed for the entire channel perimeter, an estimate of the rock size may be required to determine *n*. See Section 38-5.06.

    b. If the design section is a regular trapezoidal shape, and flow can be assumed to be uniform, use the design procedure described in Chapter Thirty.

c. If the design section is irregular or flow is not uniform, backwater procedures must be used to determine the design water surface.

d. The backwater analysis must be based on conveyance weighing of flows in the main channel, right bank, and left bank.

5. Determine design average velocity and depth as follows.

a. Average velocity and depth should be determined for the design section in conjunction with the computations from Step 4. The average depth and velocity in the main flow channel should be used.

b. If riprap is being designed to protect the channel banks, abutments, or piers located in the floodplain, the average floodplain depth and velocity should be used.

6. Compute the bank angle correction factor K_1 from Equation 38-6.2 and Figures 38-6B and 38-6C.

7. Determine the riprap size required to resist particle erosion from Equation 38-6.1 and Figure 38-6A as follows.

a. Initially assume no corrections.

b. Evaluate the correction factor for rock-riprap specific gravity and stability factor $C = C_{sg}C_{sf}$.

c. If designing riprap for a pier or abutment, see Chapter Thirty-two.

8. If the entire channel perimeter is being stabilized, and an assumed D_{50} was used in determination of Manning's *n* for backwater computations, repeat Steps 4 through 7.

9. If in a causeway situation, determine the wave height.

10. Select the final D_{50} riprap size, set material gradation from Section 38-6.01(03) and Figure 38-6J, and determine riprap-layer thickness from Section 38-6.01(05).

11. Determine the longitudinal extent of protection required (Section 38-5.07).

12. Determine the appropriate vertical extent of revetment (Section 38-5.07).

13. Design filter layer from Section 38-6.01(05), Figure 38-6K as follows:

    a. determine the appropriate filter material size and gradation; and
    b. determine layer thickness.

14. Design edge flanks and toe. See Section 38-6.01(07).

38-6.01(09) Design Examples

The following design examples illustrate the use of the design methods and procedures outlined above. Example 38-6.1 illustrates the design of a riprap-lined channel section. Example 38-6.2 illustrates the design of riprap as bank protection. In the examples, the steps correlate with the design procedure described above. Computations are also shown on the appropriate figures.

* * * * * * * *

1. Example 38-6.1. A 380-m channel reach is to be realigned to make room for the widening of an existing highway. Realignment of the channel reach will necessitate straightening the channel and reducing its length from 380 m to 305 m. The channel is to be sized to carry 140 m^3/s within its banks. Additional site conditions are as follows:

    a. flow conditions can be assumed to be uniform or gradually varying;

    b. the existing channel profile dictates that the straightened reach be designed at a uniform slope of 0.0049;

    c. the natural soils are gap graded from medium sands to coarse gravels, with the distribution as follows:

    D_{85} = 32 mm D_{50} = 19.5 mm D_{15} = 1.37 mm
    K (permeability) = 3.5×10^{-2} cm/s

    d. available rock riprap has a specific gravity of 2.65, and D_{50} = 0.3 m.

    Design a stable trapezoidal riprap-lined channel for this site. Design figures used to summarize the data in this example are reproduced in Figures 38-6R and 38-6S.

    a. Compile Field Data.

        (1) See the given information for this example.

(2) Other field data include site history, geometric constraints, roadway-crossing profiles, site topography, etc.

b. Design Discharge.

(1) Given as 140 m^3/s.

(2) Discharge in main channel equals the design discharge because the entire design discharge is to be contained in the channel as specified.

c. Design Cross Section.

(1) As specified, a trapezoidal section is to be designed.

(2) Initially assume a trapezoidal section with a 6.1 m bottom width and 2H:1V side slopes (see Figure 38-6R).

d. Compute Design Water Surface.

(1) Determine roughness coefficient, n = 0.04.

(2) Compute flow depth. Assume R = 2.1 m

(3) Solve Manning's equation for normal depth or see Chapter Thirty.

$$Q = \frac{AR^{0.67}S^{0.5}}{n}$$

d = 3.61 m

(4) Compute the hydraulic radius to compare with the assumed value used in Step d(1). Use computer programs, available charts and tables, or manually compute.

$R = A/P$
R = 47.8 / 22.1
R = 2.16 m, which is approximately equal to R (assumed); therefore,
d = 3.61 m OK

e. Determine design parameters.

$A = 3.61(6.1) + 2\,(3.61)^2 = 48.1\ m^2$
$V_a = Q/A$ = 140 / 48.1 = 2.91 m/s

$d_a = d$ = 3.61 m (uniform channel bottom)

f. Bank Angle Correction Factor.

θ = 2H:1V
φ = 41 (from Figure 38-6B)
K_1 = 0.73 (from Figure 38-6A)

g. Determine riprap size. See Section 38-6.01(08).

(1) Using Figure 38-6S.

for channel bed, D_{50} = 85 mm
for channel bank, D_{50} = 131 mm

(2) Riprap specific gravity = 2.65 (given).

Stability factor = 1.2 (Figure 38-6P, column 9)
Uniform flow, little or no uncertainty in design
C = 1

(3) No piers or abutments to evaluate for this example, therefore $C_{p/a}$ = 1.

(4) Corrected riprap size.

For channel bed, $D'_{50} = D_{50}$ = 85 mm
For channel banks, $D'_{50} = D_{50}$ = 131 mm

h. This step is not applicable.

i. Surface waves. Surface waves determined not to be a problem at this site.

j. Select design riprap size, gradation, and layer thickness.

D_{50} size: Recommend AASHTO Face Class riprap
D_{50} = 290 mm for entire perimeter

Layer thickness, T.

$T = 2D_{50}$ = 2(290 mm) = 580 mm, or $T = D_{100}$ = 395 mm
Use T = 600 mm

k. Longitudinal Extent of Protection. Riprap lining is to extend along the entire length of the straightened reach plus an additional upstream and downstream distance.

l. Vertical Extent of Protection. Riprap entire channel perimeter to top of bank.

m. Filter layer design.

(1) Filter material size.

$$\frac{D_{15}\ coarser\ layer}{D_{85}\ finer\ layer} < 5 < \frac{D_{15}\ coarser\ layer}{D_{15}\ finer\ layer} < 40 \qquad \text{(Equation 38-6.10)}$$

(2) Riprap-to-soil interface.

$$\frac{D_{15}\ riprap}{D_{85}\ soil} = \frac{183}{30} = 6 > 5 \qquad \text{(Equation 38-6.11)}$$

and,

$$\frac{D_{15}\ riprap}{D_{15}\ soil} = \frac{183}{1.37} = 133 > 40 \qquad \text{(Equation 38-6.12)}$$

Therefore, a filter layer is needed. Try a 51-mm uniformly-graded coarse gravel filter.

(3) Filter-to-soil interface.

$$\frac{D_{15}\ filter}{D_{85}\ soil} = \frac{30}{32} = 0.94 < 5 \qquad \text{(Equation 38-6.13)}$$

and,

$$\frac{D_{15}\ riprap}{D_{15}\ soil} = \frac{30}{1.37} = 21.9 > 5\ and < 40 \qquad \text{(Equation 38-6.14)}$$

Therefore, filter-to-soil interface is OK.

(4) Riprap-to-filter interface.

$$\frac{D_{15}\ riprap}{D_{85}\ filter} = \frac{183}{60} = 3 < 5 \qquad \text{(Equation 38-6.15)}$$

and,

$$\frac{D_{15}\ riprap}{D_{15}\ filter} = \frac{183}{30} = 6 > 5\ and < 40 \qquad \text{(Equation 38-6.16)}$$

Therefore, the 51-mm filter material is adequate.

(5) Filter layer thickness. Because the soil-gradation curve and the filter-layer gradation curve are not approximately parallel, use layer thickness of 203 mm.

n. Edge Details. Line the entire perimeter. The edge flanks and toe should be as shown in Figure 38-6M. Also see the sketch in Figure 38-6R.

* * * * * * * *

2. Example 38-6.2. The site illustrated in Figure 38-6T and discussed below is migrating laterally towards Route 1; see Figure 38-6T(a). Design a riprap revetment to stabilize the active bank erosion at this site.

The process of developing an appropriate channel geometry is illustrated in Figure 38-6T. Figure 38-6T(a) illustrates the location of the design site at position 2 along Route 1. The section illustrated in Figure 38-6T(c) was surveyed at this location and represents the current condition. No previous channel surveys are available at this site. However, data from some old surveys are available in the vicinity of an upstream railroad crossing (location 1). Figure 38-6T(b) illustrates these survey data. The surveys indicate that there is a trend for the thalweg of the channel to migrate within the right half of the channel. Because locations 1 and 2 are along bends of similar radii, it can be assumed that a similar phenomenon occurs at location 2. A thalweg located immediately adjacent to the channel bank represents the hydraulically-worst situation section at location 2. Therefore, the surveyed section at location 2 is modified to reflect this. The maximum section depth located in the thalweg is increased to reflect the effect of stabilizing the bank. The maximum depth in the thalweg is set to 1.7 times the average depth of the original section. It is assumed that the average depth before modification of the section is the same as the average depth after modification. The final modified-section geometry is illustrated in Figure 38-6T(c).

Additional site conditions are as follows:

a. flow conditions are gradually varying;

b. channel characteristics are as described above;

c. topographic survey indicates the following:

(1) channel slope = 0.0024
(2) channel width = 90 m; and
(3) bend radius = 365 m;

d. channel bottom is armored with cobble-sized material with D_{50} of approximately 150 mm;

e. bank soils are silty sand with the soil characteristics as follows:

D_{85} = 1.28 mm;
D_{50} = 0.46 mm;
D_{15} = 0.14 mm; and
K (permeability) = 1.0×10^{-6} m/s;

f. available rock riprap has a specific gravity of 2.60 and is described as angular;

g. field observations indicate that the banks are severely cut just downstream of the bend apex. Erosion was also observed downstream to the bend exit and upstream to the bend quarter points; and

h. bank height along the cut banks is approximately 2.7 m.

Figure 38-6U provides the completed Example 2. Figures 38-6V and 38-6W summarize the data used in Example 2.

a. Compile Field Data.

(1) See the given information for this example.
(2) See the site history described above.

b. Design Discharge.

(1) Given as 1320 m^3/s.

(2) From backwater analysis of this reach, it is determined that the discharge confined to the main channel, Q_{mc}, is 980 m^3/s.

c. Design Cross Section.

(1) Only the channel bank is to be stabilized. Therefore, the channel section will consist of the existing channel with the bank graded to an appropriate angle to support the riprap revetment. Figure 38-6V illustrates the existing channel section.

(2) To minimize loss of bank vegetation and to limit the encroachment of the channel on adjacent lands, a 2H:1V bank slope is to be used.

(3) The current bank height along the cut banks is 2.7 m.

d. Compute Design Water Surface.

(1) Determine roughness coefficient n = 0.042. This represents the average reach n used in the backwater analysis.

(2) Compute flow depth:

(a) Flow depth determined from backwater analysis. The maximum main channel depth is determined to be d_{max} = 4.57 m.

(b) Hydraulic radius for main channel. R = 3.17 m from the backwater analysis. *R assumed* of 3.05 m is approximately equal to *R actual*. Therefore, n as computed is OK.

e. Determine Other Design Parameters. From the backwater analysis, the main-channel values are as follows:

A = 255 m^2
V_a = 3.84 m/s
$d_a = d$ = 3.66 m

f. Bank angle correction factor.

θ = 2H:1V
φ = 41 deg, from Figure 38-6B and Figure 38-6W
K_1 = 0.73 from Figure 38-6A

g. Determine riprap size.

(1) Using Figure 38-6A, D_{50} = 274 mm

(2) Riprap specific gravity = 2.60 (given)
Stability factor = 1.6
gradually varying flow, sharp bend, bend radius to width = 4
C = 1.6

(3) no piers or abutments to evaluate for this example, therefore $C_{p/a}$ = 1

(4) Corrected riprap size.

$D'_{50} = D_{50}(1.6)(1.0) = 438$

h. This step is not applicable.

i. Surface Waves. Surface waves determined not to be a problem at this site.

j. Select design riprap size, gradation, and layer thickness for preliminary design of waterway area.

D_{50} size: Recommend AASHTO 0.23-Mg-class riprap
D_{50} = 549 mm

Gradation: See Figure 38-6U.

Layer thickness, T:
$T = 2D_{50} = 2(549) = 1098$ mm, or $T = D_{100} = 686$ mm
Use T = 1100 mm

k. Longitudinal Extent of Protection. Field observations indicate that the banks are severely cut just downstream of the bend apex. Erosion was also observed downstream to the bend exit and upstream to the bend quarter points. Therefore, establish longitudinal limits of protection to extend to a point 90 m, W, upstream of the bank entrance, and to a point 135 m, 1.5W, downstream of the bend exit.

l. Vertical Extent of Protection. Riprap the entire channel bank from top of bank to below the depth of anticipated scour. Scour depth is evaluated as illustrated in Section 38-5.07, as follows:

$d_s = 3.72D_{50}^{-0.11}$ (Equation 38-5.3)
$d_s = 3.72\ (150)^{-0.11} = 2.14$ m

Adding this to the observed maximum depth yields a potential maximum scour depth of 4.57 + 2.14 = 6.71 m.

The bank material should be run to this depth, or a sufficient volume of stone should be placed at the bank toe to protect against the necessary depth of scour.

m. Filter Layer Design.

(1) Filter-material size (Figure 38-6K).

$$\frac{D_{15}\ coarser\ layer}{D_{15}\ finer\ layer} < 5 < \frac{D_{15}\ coarser\ layer}{D_{15}\ finer\ layer} < 40 \qquad \text{(Equation 38-6.17)}$$

(2) Riprap-to-soil interface.

$$\frac{D_{15}\ riprap}{D_{85}\ soil} = \frac{150}{1.3} = 115 > 5 \qquad \text{(Equation 38-6.18)}$$

and,

$$\frac{D_{15}\ riprap}{D_{15}\ soil} = \frac{150}{0.14} = 1094 > 40 \qquad \text{(Equation 38-6.19)}$$

Therefore, a filter layer is needed. Try a 13-mm uniformly-graded fine-gravel filter with gradation characteristics as shown in Figure 38-6J..

(3) Filter-to-soil interface.

$$\frac{D_{15}\ filter}{D_{85}\ soil} = \frac{4.6}{1.3} = 3.5 < 5 \qquad \text{(Equation 38-6.20)}$$

and,

$$\frac{D_{15}\ riprap}{D_{15}\ soil} = \frac{4.6}{0.14} = 33 > 5\ and < 40 \qquad \text{(Equation 38-6.21)}$$

Therefore, filter-to-soil interface is OK.

(4) Riprap-to-filter interface.

$$\frac{D_{15}\ riprap}{D_{85}\ filter} = \frac{150}{30} = 5 \leq 5 \qquad \text{(Equation 38-6.22)}$$

and,

$$\frac{D_{15}\ riprap}{D_{15}\ filter} = \frac{150}{4.57} = 32.8 > 5\ and < 40 \qquad \text{(Equation 38-6.23)}$$

Therefore, the 13-mm filter material is adequate.

(5) Filter Layer Thickness. Because the soil-gradation curve and filter layer, riprap, and bank soil are approximately parallel, use a layer thickness of 203 mm.

n. Edge Details. For the flank and toe details, see Figure 38-6W.

Anticipated scour depth below the existing channel bottom at the bank, d'_s, is the depth of scour computed in Step 12 minus the current bed elevation at the bank (see Figure 38-6V): 6.7 m – 3.7 m = 3 m.

Rock quantity required below the existing bed is determined as follows:

$$R_q = 1.5Td'_s \sin^{-1}\theta \qquad \text{(Equation 38-6.24)}$$

Where: R_q =required riprap quantity per meter of bank, m^2
θ = bank angle with the horizontal, deg
T = riprap-layer thickness, m

R_q = 1.5 (1.1)(3)(2.24) = 11.1 m^2

A 1.8-m deep trapezoidal toe trench, with side slopes of 2H:1V and 1H:1V and a bottom width of 1.8 m, contains the necessary volume. Figure 38-6W illustrates the resulting toe-trench detail.

38-6.02 Wire-Enclosed Rock

As described in Section 38-4.03, a wire-enclosed rock, or gabion, revetment consists of rectangular wire mesh baskets filled with rock. The most common types of wire-enclosed revetment are mattresses and stacked blocks. The wire cages which make up the mattresses and gabions are available from commercial manufacturers.

A rock-and-wire-mattress revetment consists of flat wire baskets or units filled with rock that are laid end to end and side to side on a prepared channel bed or bank. The individual mattress units are wired together to form a continuous revetment mattress.

A stacked-block gabion revetment consists of rectangular wire baskets which are filled with stone and stacked in a stepped-back fashion to form the revetment surface. It is commonly used at the toe of an embankment slope as a toewall, which helps to support other upper-bank revetments and prevents undermining.

38-6.02(01) Mattress Gabion

Components of a rock-and-wire-mattress include layout of a general scheme or concept, bank and foundation preparation, mattress size and configuration, stone size, stone quality, basket- or rock-enclosure fabrication, edge treatment, and filter design. Design guidance is provided below.

1. General. A rock-and-wire-mattress revetment can be constructed from commercially-available wire units as illustrated in Figures 38-6X and 38-6Y, or from available wire-fencing material as illustrated in Figure 38-6Z. The use of commercially-available basket units is the most common practice and the least expensive.

   A rock-and-wire-mattress revetment can be used to protect either the channel bank as illustrated in Figure 38-6X, or the entire channel perimeter (Figure 38-6Y). If used for bank protection, this revetment consists of a toe section and upper-bank paving (see Figure 38-6X). As illustrated in Figure 38-6X, a variety of toe designs can be used. Design emphasis should be placed on toe design and filter design. These designs are discussed later. The vertical and longitudinal extent of the mattress should be based on guidelines provided in Section 38-5.07.

2. Bank and Foundation Preparation. The channel bank should be graded to a uniform slope. The graded surface, either on the slope or on the streambed at the toe of the slope on which the rock-and-wire mattress is to be constructed, should not deviate from the specified slope line by more than 150 mm. Blunt or sharp objects such as rocks or tree roots protruding from the graded surface should be removed.

3. Mattress-Unit Size and Configuration. Individual mattress units should be of a size that is easily handled on site. Commercially-available gabion units are available in standard sizes as indicated in Figure 38-6AA. Manufacturers' literature indicates that alternative sizes can be manufactured if required, provided that the quantities involved are of a reasonable magnitude.

The mattress should be divided into compartments so that failure of one section of the mattress will not cause loss of the entire mattress. Compartmentalization also adds to the structural integrity of individual gabion units. Diaphragms should be installed at a nominal 0.9-m spacing within each of the gabion units to provide the recommended compartmentalization (see Figure 38-6BB).

On a slope steeper than 1H:3V, and in an environment subject to high stresses (area prone to high flow velocity, debris flow, ice flow, etc.), diaphragms should be spaced at minimum intervals of 0.6 m to prevent movement of the stone inside the basket.

The thickness of the mattress is determined by the erodibility of the bank soil, the maximum velocity of the water, and the bank slope. The minimum thickness required for given conditions is tabulated in Figure 38-6CC. These values are based on observations of a number of mattress installations which assume a filling material in the size range of 75 mm to 150 mm.

The mattress thickness should be at least as thick as two overlapping layers of stone. The thickness of a mattress used as a bank-toe apron should exceed 300 mm. The range is 300 mm to 500 mm. The thickness of a mattress revetment can vary according to need by utilizing gabions of different depths as illustrated in Figure 38-6X(d).

4. Stone Size. The maximum stone size should not exceed the thickness of the individual mattress units. The stone should be well-graded within the sizes available. Seventy percent of the stone, by weight, should be slightly larger than the wire-mesh opening. For commercially-available units, the wire-mesh opening sizes are listed in Figure 38-6AA.

   The common median-stone size used in a mattress design ranges from 75 mm to 150 mm for a mattress less than 0.3 m thick. For a thicker mattress, rock with a median size up to 0.3 m is used.

5. Stone Quality. The stone should satisfy the quality requirements for dumped-rock riprap.

6. Basket Fabrication. Commercially-fabricated basket units are formed from galvanized steel wire mesh of triple twist hexagonal weave. The netting wire and binding wire is approximately 2 mm in diameter. The wire for edges and corners is approximately 3 mm in diameter. Manufacturers' instructions for field assembly of basket units should be followed.

   Galvanized wire baskets may be safely used in fresh water or where the pH of the liquid in contact with it is not greater than 10.

For a highly-corrosive condition, such as in a salt-water environment, industrial area, polluted stream, or soil such as muck, peat, or cinders, a polyvinyl chloride (PVC) coating should be placed over the galvanized wire. It should be capable of resisting deleterious effects of natural weather exposure and immersion in salt water and should not show a material difference in its initial characteristics over time.

7. Edge Treatment. The toe, head, and flanks of a rock-and-wire mattress revetment installation require treatment to prevent damage from undermining. Figure 38-6X illustrates the possible toe-treatment configurations. If a toe apron is used, its projection should be 1.5 times the expected maximum depth of scour in the vicinity of the revetment toe. Where little toe scour is expected, the apron can be replaced by a single-course gabion toewall which helps to support the revetment and prevents undermining. Where an excessive amount of toe scour is anticipated, both an apron and a toe wall can be used.

   To provide extra strength at the revetment flanks, mattress units having additional thickness be used at the upstream and downstream edges of the revetment (see Figure 38-6EE). A thin layer of topsoil should be spread over the flank units to form a soil layer to be seeded once the revetment installation is complete. The head of a rock-and-wire-mattress revetment can be terminated at grade as illustrated in Figure 38-6X.

8. Filter Design. Individual mattress units will act as a crude filter and a pavement unit if filled with overlapping layers of hand-size stones. However, the need for a filter should be investigated. If necessary, a layer of permeable membrane cloth (geotextile) woven from synthetic fibers, or a 100-mm to 150-mm layer of gravel should be placed between the silty bank and the rock-and-wire-mattress revetment to further inhibit washout of fines.

9. Construction. Construction methods for a rock-and-wire mattress vary with the design and purpose for which the protection is provided. Details are illustrated in Figures 38-6X, 38-6Y, and 38-6Z. A rock-and-wire-mattress revetment may be fabricated where it is to be placed or at an off-site location. Fabrication at an offsite location requires that the individual mattress units be transported to the site. Moving and placing the baskets should not damage them by breaking or loosening strands of wire or ties, or by removing the galvanizing or PVC coating. Because of the potential for damage to the wire enclosures, off-site fabrication is not recommended.

   Installation of mattress units above the water line is accomplished by placing individual units on the prepared bank, lacing them together, filling them with appropriately-sized rock, then lacing the tops to the individual units. Figure 38-6FF provides an illustration. Where the mattress units must be placed below the water line in relatively shallow water, mattress units can be assembled at a convenient location and then be placed on the bank using a crane as illustrated in Figure 38-6GG. For a deep-water installation, an efficient

method of large-scale placement is to fabricate the mattress sections on a barge or pontoon and then launch them into the water at the shore line (see Figure 38-6HH).

38-6.02(02) Stacked-Block Gabion

Components of a stacked-block gabion revetment include the layout of a general scheme or concept, bank and foundation preparation, unit size and configuration, stone size and quality, edge treatment, backfill and filter considerations, and basket or rock enclosure fabrication. Design guidelines for stone size and quality and bank preparation are the same as those discussed for a mattress design.

1. General. A stacked-block gabion revetment is used instead of a gabion mattress where the slope to be protected is steeper than 1H:1V, or where the purpose of the revetment is for flow training. Design methods include flow-training wall, as shown in Figure 38-6 I I(a), or low retaining wall, as shown in Figure 38-6 I I(b).

   A stacked-block gabion revetment must be based on a firm foundation. The foundation or base elevation of the structure should be below the anticipated scour depth. In an alluvial stream where channel-bed fluctuations are common, an apron should be used as illustrated in Figure 38-6 I I(a) and (b). An apron should be used where the estimated scour depth is uncertain.

2. Size and Configuration. The common commercial sizes are listed in Figure 38-6AA. The most common size used is that of width and depth of 0.9 m. A size of less than 0.3 m thickness is not practical.

   Configurations include flow-training wall or structural retaining walls. The primary function of a flow-training wall is to establish a normal channel boundary in a river where erosion has created a wide channel, or to realign the river where it is encroaching on an existing or proposed structure. A stepped-back wall is constructed at the desired bank location. Counterforts are installed to tie the wall to the channel bank at regular intervals as illustrated. The counterforts are installed to form a structural tie between the training wall and the natural stream bank and to prevent overflow from scouring a channel behind the wall. Counterforts should be spaced to eliminate the development of eddy or other flow currents between the training wall and the bank which can cause further erosion of the bank. The dead-water zones created by the counterforts so spaced will encourage sediment deposition behind the wall which will enhance the stabilizing characteristics of the wall.

   A retaining wall can be designed in a stepped-back configuration as illustrated in Figure 38-6 I I(b). Structural details and configurations can vary from site to site.

A gabion wall is a gravity structure, and its design follows standard engineering practice for a retaining structure. Design procedures are available in standard soil mechanics texts or in gabion manufacturers' literature.

3. Edge Treatment. The upstream and downstream flanks of the revetment should include counterforts. See Figure 38-6 I I(a). The counterforts should be placed 3.6 m to 5.5 m from the upstream and downstream limits of the structure and should extend a minimum of 3.6 m into the bank.

   The toe of the revetment should be protected by placing the base of the gabion wall at a depth below the anticipated scour depth. Where it is difficult to predict the depth of expected scour, or where channel-bed fluctuations are common, a mattress apron should be used. The minimum apron length should be equal to 1.5 times the anticipated scour depth below the apron. This length can be increased in proportion to the level of uncertainty in predicting the local toe scour depth.

4. Backfill or Filter Requirements. Gabion-structure design requires the use of selected backfill behind the retaining structure to provide for drainage of the soil mass behind the wall. The permeable nature of a gabion structure permits natural drainage of the supported embankment. However, because material leaching through the gabion wall can become trapped and cause plugging, a granular backfill material should be used. The backfill should consist of a 50-mm to 300-mm layer of graded crushed stone backed by a layer of fine granular backfill.

5. Basket Fabrication. Commercially-fabricated basket units are formed from galvanized steel wire mesh of triple twist hexagonal weave. Figure 38-6JJ illustrates the details of basket fabrication.

6. Construction. Construction of a gabion installation varies with the design and purpose for which the protection is being provided. Installation methods are shown in Figures 38-6 I I and 38-6JJ.

   As with a mattress gabion, fabrication and filling of individual basket units can be done at the site or at an off-site location. The most common practice is to fabricate and fill individual gabions at the design site. The following steps outline the sequence used for installing a stacked-block gabion revetment or wall.

   a. Prepare the revetment foundation. This includes excavation for the foundation and revetment wall.

b. Place the filter and gabion mattress, if required, on the prepared grade. Sequentially stack the gabion baskets to form the revetment system.

c. Each basket is unfolded and assembled by lacing the edges together and the diaphragms to the sides.

d. Fill the gabions to a depth of 0.3 m with stone of 100 mm to 300 mm diameter. Place one connecting wire in each direction and loop it around two meshes of the gabion wall. Repeat this operation until the gabion is filled.

e. Wire the adjoining gabions together by their vertical edges. Stack empty gabions onto the filled gabions and wire them at front and back.

f. After the gabion is filled, fold the top shut and wire it to the ends, sides, and diaphragms.

g. Crushed stone and granular backfill should be placed at intervals to help support the wall structure. Backfill be should placed in three-course intervals.

38-6.03 Precast Concrete Blocks

A precast-concrete-block revetment consists of preformed sections which interlock with each other, are attached to each other, or butt together to form a continuous blanket or mat. The concrete blocks which make up the mats differ in shape and method of articulation, but they share certain common features. The features include flexibility, rapid installation, and provision for the establishment of vegetation within the revetment.

38-6.03(01) Block Configurations

Precast-concrete blocks are available in a number of shapes and configurations. Figures 38-6KK, 38-6LL, 38-6MM, 38-6NN and 38-6 OO illustrate commercially-available concrete-block configurations. Other manufacturers' configurations are available. A precast-concrete revetment is bound to rectangular sheets of filter fabric, interlocks individual blocks, or is butted together at the site. The most common method is to join individual blocks with wire cable or synthetic fiber rope.

38-6.03(02) Design Guidelines

Components of a precast-concrete-block revetment design include layout of a general scheme or concept, bank preparation, mattress and block size, slope, edge treatment, filter design, and surface treatment.

As illustrated in Figures 38-6KK, 38-6LL, 38-6MM, 38-6NN and 38-6 OO, precast-concrete blocks are placed on the channel bank as continuous mattresses. Design emphasis should be placed on toe design, edge treatment, and filter design.

1. Bank Preparation. Channel banks should be graded to a uniform slope. Large boulders, roots, or debris should be removed from the bank prior to final grading. Holes, soft areas, and large cavities should be filled. The graded surface, either on the slope or on the stream bed at the toe of the slope on which the revetment is to be constructed, should be true to line and grade. The bank surface should be lightly compacted to provide a solid foundation for the mattress.

2. Mattress And Block Size. The overall mattress size is dictated by the longitudinal and vertical extent required of the revetment system. An articulated block mattress is assembled in sections prior to placement on the bank. Individual mattresses should be constructed to a size that is easily handled on site with available construction equipment. The size of individual blocks is variable from manufacturer to manufacturer. Individual manufacturers have a number of standard sizes of a particular block available. Manufacturers' literature should be consulted in selecting an appropriate block size for a given hydraulic condition.

3. Slope. An articulated precast-block revetment can be used on a bank slope up to 1.5H:1V. However, an earth anchor should be used at the top of the revetment to secure the system against slippage (see Figures 38-6MM and 38-6NN). A precast-block revetment that is assembled by butting individual blocks end to end with no physical connection should not be used on a slope steeper than 3H:1V.

4. Edge Treatment. The toe, head, and flanks require treatment to prevent undermining. Toe treatment includes an apron design as illustrated in Figures 38-6KK and 38-6NN, and a toe-trench design as illustrated in Figures 38-6LL and 38-6MM. As a minimum, a toe apron should extend 1.5 times the anticipated scour depth in the vicinity of the bank toe. If a toe trench is used, the mattress should extend to a depth greater than the anticipated scour depth in the vicinity of the bank toe.

   The edges can be terminated at-grade (Figures 38-6KK, 38-6LL, and 38-6NN) or in a termination trench. A termination trench is recommended in an environment subject to significant erosion (silty or sandy soil, or high velocity), or where failure of the revetment results in significant economic loss. A termination trench provides more protection against failure from undermining and outflanking than an at-grade termination.

However, where upper-bank erosion or lateral outflanking is not expected to be a problem, a grade termination may provide an economic advantage.

For an articulated block, earth anchors should be placed at regular intervals along the top of the revetment (see Figures 38-6LL and 38-6MM). Anchors are spaced based on soil type, mat size, and the size of the anchors. See manufacturers' literature for the recommended spacing.

5. Filter. Prior to installing the mats, a geotextile filter fabric should be installed on the bank to prevent bank material from leaching through the openings in the mattress structure. Although a fabric filter is recommended, graded filter material can be used if it is properly designed and installed to prevent movement of the graded material through the protective mattress.

6. Surface Treatment. The spaces between and within individual blocks located above the low-water line should be filled with earth and seeded so that natural vegetation can be established on the bank (see Figures 38-6LL and 38-MM). This treatment enhances both the structural stability of the embankment and its aesthetic qualities.

38-6.03(03) Construction

Schematics of the types of precast-block revetments discussed above are provided in Figures 38-6KK, 38-6LL, 38-6MM, 38-6NN, and 38-6 OO. More-detailed sketches and information are available from individual manufacturers. Manufacturers also have available information on construction procedures. A manufacturer can provide on-site advice and assistance in the installation of its system.

After the site preparation work is completed, construction follows the following sequence.

1. Excavate toe, flank, and upper bank protection trenches as required.

2. Place filter fabric or graded filter material on the prepared subgrade.

3. Individual mats are attached to a spreader bar and lifted for placement onto the embankment slope. Mats are placed side by side on the bank until the entire prepared surface is covered.

4. Adjacent mats are secured to one another by fastening side-connecting cables and end loops or by pouring side-connecting keys.

5. Optional anchors are placed at the top and flanks of the protection as required.

6. Backfill is spread over the mats and into the open cells or spaces between cells and into the anchor trenches. Anchor trenches are then compacted. The backfill should be seeded and fertilized according to local seasonal conditions.

A non-articulated block revetment in which the blocks are butted together instead of being physically attached, is constructed in a similar manner. However, the individual blocks must be placed on the bank by hand, one at a time. This results in a much more labor-intensive installation procedure.

38-6.04 Grouted Riprap

38-6.04(01) Design Guidelines

Grouted revetment riprap consists of rock-slope-protection having voids filled with concrete grout to form a monolithic armor. See Section 38-4.05 for additional descriptive information and performance characteristics.

Components of grouted-rock-riprap design include the layout of a general scheme or concept, bank preparation, bank slope, rock quality, grout quality, edge treatment, filter design, and pressure relief.

Grouted riprap is a rigid monolithic bank-protection method. Once complete, it forms a continuous surface. A grouted-riprap section is shown in Figure 38-6PP.

Grouted riprap should extend from below the anticipated channel-bed scour depth to the design highwater level, plus additional height for freeboard.

1. Bank and Foundation Preparation. The bank should be prepared by clearing all trees or debris from the bank and grading the bank surface to the desired slope. The graded surface should not deviate from the specified slope line by more than 150 mm. However, a local depression larger than this can be accommodated because initial placement of filter material r rock for the revetment will fill the depression.

   Because grouted riprap is rigid but not extremely strong, support by the embankment must be maintained. To form a firm foundation, the bank surface should be tamped or lightly compacted. Soil permeability similar to that of the natural, undisturbed bank material should be maintained. The foundation for the grouted-riprap revetment should have a bearing capacity sufficient to support either the dry weight of the revetment alone or the submerged weight of the revetment plus the weight of the water in the wedge above the revetment for design conditions, whichever is greater.

2. Bank Slope. The bank slope for should not be steeper than 1.5H:1V.

3. Rock Quality. Rock used in grouted-rock slope-protection is the same as that used in ordinary rock-slope-protection. However, the values for specific gravity and hardness may be lowered if necessary as the rocks are protected by the surrounding grout. The rock used in a grouted-riprap installation should be free of fines so that penetration of grout may be achieved.

4. Grout Quality and Characteristics. Grout should consist of concrete with a maximum aggregate size of 19 mm and a slump of 75 mm to 100 mm. A sand mix may be used where roughness of the grout surface is unnecessary, provided sufficient cement is added to provided strength and workability.

   The finished grout should leave face stones exposed for one-fourth to one-third their depth. The surface of the grout should expose a matrix of coarse aggregate. See the INDOT *Standard Specifications* for more information on grout.

5. Edge Treatment. The head, toe, and flanks require treatment to prevent undermining. The revetment toe should extend to a depth below anticipated scour depths or to bedrock. The toe should be designed as illustrated in Figure 38-6PP(a). After excavating to the desired depth, the riprap-slope protection should be extended to the bottom of the trench and grouted. The remainder of the excavated area in the toe trench should be filled with ungrouted riprap. The grout-free riprap provides extra protection against undermining at the bank toe. Edge-treatment designs are illustrated in Figure 38-6PP (a), (b) and (c).

6. Filter Design. A filter is required under the grouted-riprap revetment to provide a zone of high permeability to carry off seepage water and prevent damage to the overlying structure from uplift pressure. A 150-mm granular filter is required beneath the pavement to provide an adequate drainage zone. The filter can consist of well-graded granular material or uniformly-graded granular material with an underlying filter fabric. The filter should be designed to provide a high degree of permeability while preventing base material particles from penetrating the filter, thus causing clogging and failure of the protective filter layer.

7. Pressure Relief. Weep holes should be provided in the revetment to relieve hydrostatic pressure buildup behind the grout surface; see Figure 38-6PP(a). Weep holes should extend through the grout surface to the interface with the gravel underdrain layer. Weep holes should consist of 75-mm diameter pipes having a maximum horizontal spacing of 1.8 m and a maximum vertical spacing of 3.0 m. The buried end of the weep hole should be covered with wire screening or a fabric filter of a gage that will prevent passage of the gravel underlayer.

38-6.04(02) Construction

Construction details for a grouted-riprap revetment are illustrated in Figure 38-6PP. The following construction procedures should be followed.

1. Construction procedures include bank clearing and grading, development of foundations, placement of rock-slope protection, grouting of the interstices, backfilling toe and flank trenches, and vegetation of disturbed areas.

2. The rock should be wet immediately prior to commencing the grouting operation.

3. The grout may be transported to the place of final deposit by means of chutes, tubes, buckets, pneumatic equipment, or other mechanical method which will control segregation and uniformity of the grout.

4. Spading and rodding are necessary where penetration is achieved through gravity flow into the interstices.

5. Loads should not be allowed upon the revetment until the proper strength has been developed.

38-6.05 Grouted-Fabric Slope Paving

A grouted fabric-formed revetment is a relatively new development for use on an earth surface subject to erosion. It has been used as an alternative to traditional revetment such as a concrete liner, or riprap on a reservoir, canal, or dike.

A grouted fabric-formed revetment is made by pumping a fluid structural grout, or fine-aggregate concrete, into an insitu envelope consisting of a double-layer synthetic fabric. During filling, excess mixing water is squeezed out through the permeable fabric, to substantially reduce the water/cement ratio with consequent improvement in the quality of the hardened concrete. An advantage of this type of revetment is that it may be assembled underwater or in a dry location.

38-6.05(01) Types

The types of fabric-formed revetments are as follows.

1. Type 1. Two layers of nylon fabric are woven together at 125-mm to 250-mm centers as indicated in Figure 38-6QQ. These points of attachment serve as filter points to relieve hydrostatic uplift caused by percolation of groundwater through the underlying soil. The finished revetment has a deeply-cobbled or quilted appearance. Mat thickness averages from 50 mm to 150 mm.

2. Type 2. Two layers of nylon or polypropylene woven fabric are joined together at spaced centers by means of interwoven tie cords, the length of which controls the thickness of the finished revetment. See Figure 38-6RR. Plastic tubes may be inserted through the two layers of fabric prior to grout injection to provide weep holes for relief of hydrostatic uplift. The finished revetment is of uniform cross section and has a lightly-pebbled appearance. Mat thickness averages from 50 mm to 250 mm.

3. Type 3. Two layers of nylon fabric are interwoven into rectangular block patterns. The points of interweaving serve as hinges to permit articulation of the hardened concrete blocks. The revetment is reinforced with steel cables or nylon rope threaded between the two layers of fabric prior to grout injection and remains embedded in the hardened cast-in-place blocks. Block thickness is controlled with spacer cords in the center of each block.

38-6.05(02) Design Guidelines

The woven fabric for a grouted fabric-formed revetment is available from a number of manufacturers. The designer should consult the manufacturers' literature for designing and selecting the appropriate type of material and thickness for a given hydraulic condition.

38-6.06 Sand-Cement Bags

A sand-cement bag consists of a dry mix of sand and cement placed in a burlap or other suitable bag. It requires firm support from the protected bank. A filter fabric is placed underneath this type of riprap. Adequate protection of the terminals and toe is essential. The riprap has little flexibility and low tensile strength. It is susceptible to damage on a flatter slope where the area of contact between the bags is less.

38-6.06(01) Design Guidelines

Concrete riprap consists of approximately 0.02 m^3 of class C concrete in a burlap bag or in a cement sack. Each bag should be tied if in a cement sack, or the top should be folded around the bag if in a burlap sack. This type of riprap provides a heavy protection regardless of the

requirements of the site. The riprap has little flexibility and low tensile strength, and it is susceptible to damage from floating ice. It requires firm support from the protected bank and requires a filter blanket underneath the riprap. Adequate protection of the terminals and toe is essential. The toe trench must end in firm support and extend below the depth of anticipated scour. Details of terminal protection and cutoff stubs are shown in Figure 38-6SS.

The bags make close contact with each other. Some bond is secured between the bags due to the cement mortar leaking through the porous bags. A flat slope reduces the area of contact between the sacks and thus the bond is less. The slope of the protected embankment is 1.5H:1V. If the slope is as flat as 2H:1V, all sacks after the bottom row should be laid as headers, with the long dimension of each sack in line with the slope, rather than as stretchers, with the long dimension at a right angle to the slope direction.

Concrete riprap in bags can be placed as a dry mix. The riprap is wetted as the work progresses. Some of the bond between sacks can be lost by this method, but it allows the sacks to be filled at a convenient location and brought to the construction site. A well-graded filter blanket is essential to drain the water that is added during construction.

38-6.06(02) Construction

Cloth sacks, about two-thirds filled with concrete and securely tied, or burlap grain sacks, containing about 0.02 m^3 of concrete and folded at the top, are immediately placed into position after filling. The fold on each burlap sack is placed underneath the sack for a header, or against the previously-placed sack for a stretcher. Where the protected slope is 1.5H:1V or steeper, a bed consisting of two rows of sacks placed as stretchers is followed by a row of sacks placed as headers. Succeeding rows of sacks are placed as stretchers with joints between sacks staggered (see Figure 38-6SS). Each sack is hand placed and pushed into contact with the adjacent sack. On a slope flatter than 1.5H:1V, all rows after the bed row are placed as headers.

Cutoffs and weep holes should be placed as shown on the plans or as directed by the designer. The finished work should present a neat appearance with parallel rows of sacks. No sack should protrude more than 75 mm from the finished surface.

The riprap should be placed only if the temperature is above 2°C and rising. It should be protected from freezing and cured as for concrete.

If placement of concrete riprap in bags is delayed sufficiently to affect the bond between succeeding courses, a small trench about half the depth of a sack should be excavated back of the last row of sacks in place and the trench filled with fresh concrete before the next layer of sacks is placed. At the start of each day's work or if a delay of over 2 h occurs during the placing of

successive layers of sacks, the previously-placed sacks should be moistened and dusted with cement to develop bond.

38-6.07 Soil-Cement

Soil-cement is an acceptable method of slope protection for a dam, dike, levee, channel, or highway embankment. Soil-cement can also be used to construct an impervious core in a retention-dam type structure and provide a protective facing. Soil-cement is constructed in a stairstep manner by placing and compacting the soil-cement in horizontal layers stairstepped up the embankment (See Figure 38-6TT). An embankment slope from 2.5H:1V and 4H:1V, and a horizontal-layer width from 2.1 m to 2.7 m provide minimum protective thicknesses of about 0.45 m to 0.75 m measured normal to the slope.

A number of soil types can be used to make durable soil-cement slope protection. The Portland Cement Association (PCA) has data on soil types, gradations, costs, and testing procedures. The PCA also has data on placement and compaction methods.

Use of soil-cement does not require further design considerations for the embankment. Proper embankment design procedures should be followed based on individual project conditions, to prevent subsidence or other type of embankment distress.

38-6.07(01) Design Guidelines

1. Top, Toe, and End Features. All extremities of the facing should be tied into nonerodible sections or abutments. Adequate freeboard and carrying the soil-cement to the paved roadway, plus a lower-section detail as shown in Figure 38-6TT, will minimize erosion from behind the crest and under the toe of the facing. The ends of the facing should terminate smoothly in a flat slope or against a rocky abutment. A small amount of rock riprap may be placed over and adjacent to the edges of the soil-cement at its contact with the abutment.

   Where a structure such as a culvert extends through the facing, the areas immediately adjacent to such a structure are constructed by placing and compacting the soil-cement by hand, or with small power tools, or by using a lean-mix concrete.

2. Special Conditions. Slope stability is provided for an embankment by means of the strength and impermeability of the soil-cement facing. Further design considerations should not be necessary for a soil-cement-faced embankment. It is necessary to utilize proper design and analysis procedures to ensure the structural and hydraulic integrity of

the embankment. Conditions most likely to require analysis include subsidence of the embankment or rapid drawdown of the reservoir or river.

3. Subsidence. Embankment subsidence results from a compressible foundation, settlement within the embankment itself, or both. Analyzing the possible effects of such a condition involves a number of assumptions by the designer concerning the embankment behavior. Combining these assumptions with the characteristics of the facing, a structural analysis of the condition can be made. If the unit weight and flexural strength of the soil-cement are not known, they should be taken as 1924 kg/m^3 and 1.034 to 1.379 MPa, respectively. The layer effect can be ignored.

   The post-construction appearance of a pattern of narrow surface cracks of about 3 m to 6 m apart is evidence of normal hardening of the soil-cement. Substantial embankment subsidence can allow the facing to settle back in large sections coinciding with the normal shrinkage-crack pattern. If such settlement of the soil-cement, with separation at the shrinkable cracks, takes place, the slope remains adequately protected unless the settlement is large enough to allow the outer face of a settling section to move past the inner face of an adjoining section.

4. Rapid Drawdown. Rapid drawdown exceeding 4.6 m or more within 3 to 4 days theoretically produces hydrostatic pressure from moisture trapped in the embankment against the back of the facing. The design concepts that can be used to prevent damage due to rapid drawdown-induced pressure are as follows:

   a. designing the embankment so that its least-permeable zone is immediately adjacent to the soil-cement facing, which ensures that seepage through cracks in the facing will not build up a pool of water sufficient to produce damaging hydrostatic pressure;

   b. arbitrarily assuming the weight of the facing sufficient to resist uplift pressures that may develop; and

   c. providing free drainage behind, through, or under the soil-cement facing to prevent adverse hydrostatic pressure.

38-6.07(02) Construction

The method of construction at a central plant or mixed in place should be considered by the designer in determining the facing cross section. Both methods have been successfully used for soil-cement slope protection. The central plant method, however, allows faster production and provides maximum control of mixing operations. In the mixed-in-place method, mixing should

be deep enough so that there will be no unmixed seams between the layers. However, excessive striking of the soil-cement below the layer being mixed should be avoided. A compacted layer thickness of 150 mm should be used, with the recommended maximum of 230 mm for efficient, uniform compaction.

The central-plant method should be more economical for all but the smallest project. The contractor should be permitted the option of using either method where the quantity of soil-cement involved is only about 3000 m^3. The PCA has sample specifications regarding these construction methods.

38-7.0 REFERENCES

1. U.S. Corps of Engineers, April 1985, *Design of Coastal Revetments, Seawalls, and Bulkheads*, Engineering Manual EM-1110-2-1614.

2. U.S. Department of Transportation, Federal Highway Administration, *Design of Riprap Revetment*, Hydraulic Engineering Circular No. 11, 1989.

3. U.S. Department of Transportation, Federal Highway Administration, *Geosynthetic Design and Construction Guidelines*, FHWA-HI-95-038.

4. U.S. Department of Transportation, Federal Highway Administration, *Stream Stability at Highway Structures*, Hydraulic Engineering Circular No. 20, February 1991.

5. Holtz, Robert D., Christopher, Barry R., and Berg, Ryan R., *Geosynthetic Design & Construction Guidelines*, Participant Notebook, July 29, 1994 Draft, National Highway Institute, US Department of Transportation, Federal Highway Administration.

Symbol	Definition	Unit
AOS	Apparent opening size in filter cloth	mm
A	Coefficient used to determine apparent opening size	--
C	Coefficient, relates free-vortex motion to velocity streamline for equal radius of curvature	--
C_u	Uniformity coefficient	--
D_{50}	Median-bed-material size	m or mm
D_{15}	15% finer particle size	m or mm
D_{85}	85% finer particle size	m or mm
d_{avg}	Average flow depth in main-flow channel	m
d_s	Estimated probable maximum depth of scour	m
g	Gravitational acceleration, 9.81 m/s^2	m/s^2
H	Wave height	m
k	Permeability	cm/s or mm/s
K_1	Correction term reflecting bank angle	--
n	Manning's roughness coefficient	--
O_{95}	Opening size in geotextile material for which 95% of the openings are smaller	mm
Q_{mc}	Discharge in zone of main-channel flow	m^3/s
R	Hydraulic radius	m
R	Wave runup	m
R_o	Mean radius of channel centerline at bend	m
S_f, S	Friction slope or energy-grade-line slope	m/m
SF	Stability factor	--
S_s, s	Specific gravity of riprap material	--
T	Top width of channel between its banks	m
V	Velocity	m/s
V_a	Mean channel velocity	m/s
W_{50}	Weight of median particle	kg
Z	Superelevation of water surface	m
γ	Unit weight of riprap material	kg/m^3
θ	Bank angle with the horizontal	deg
Φ	Riprap material's angle of repose	deg

SYMBOLS AND DEFINITIONS

Figure 38-1A

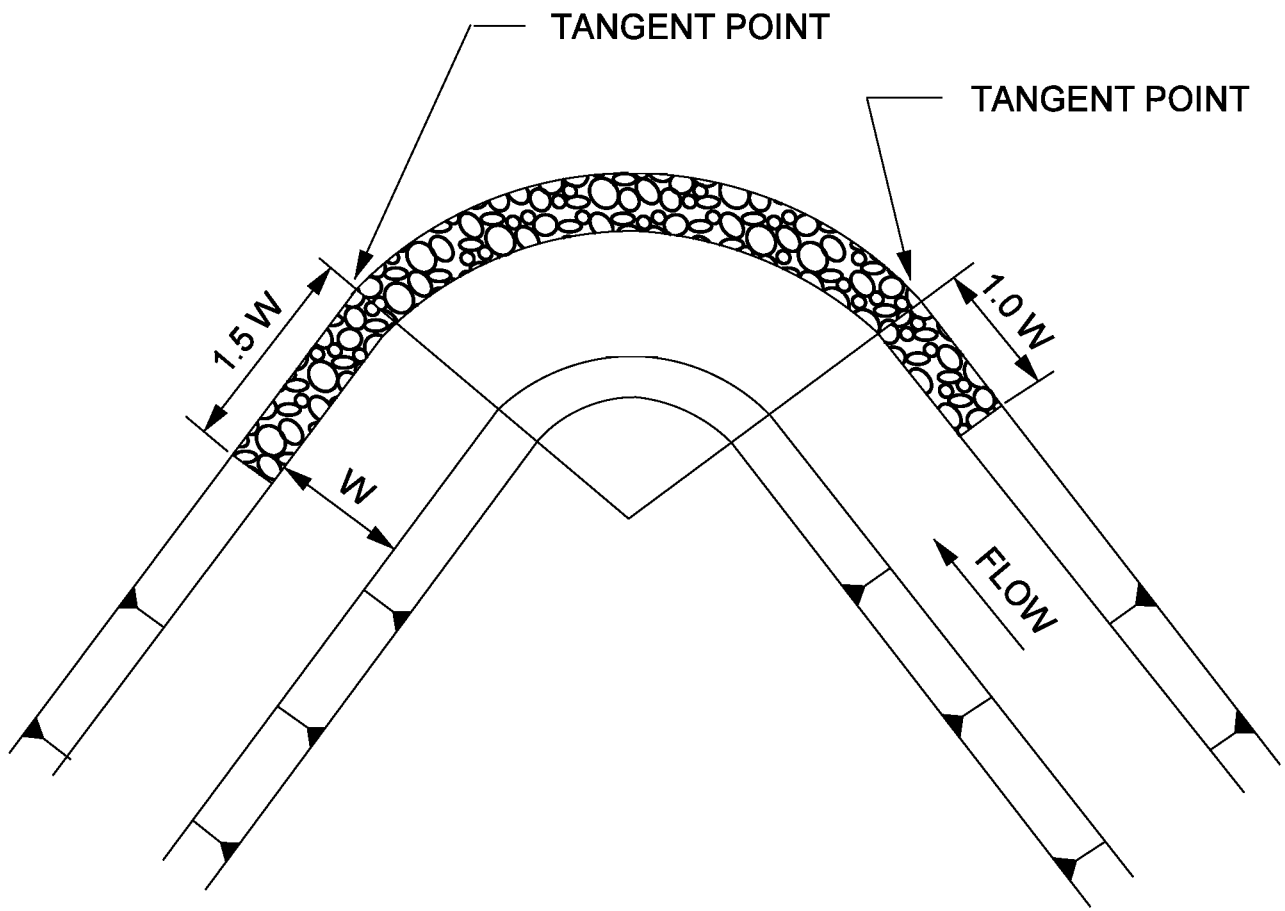

LONGITUDINAL EXTENT OF REVETMENT PROTECTION

Figure 38-5A

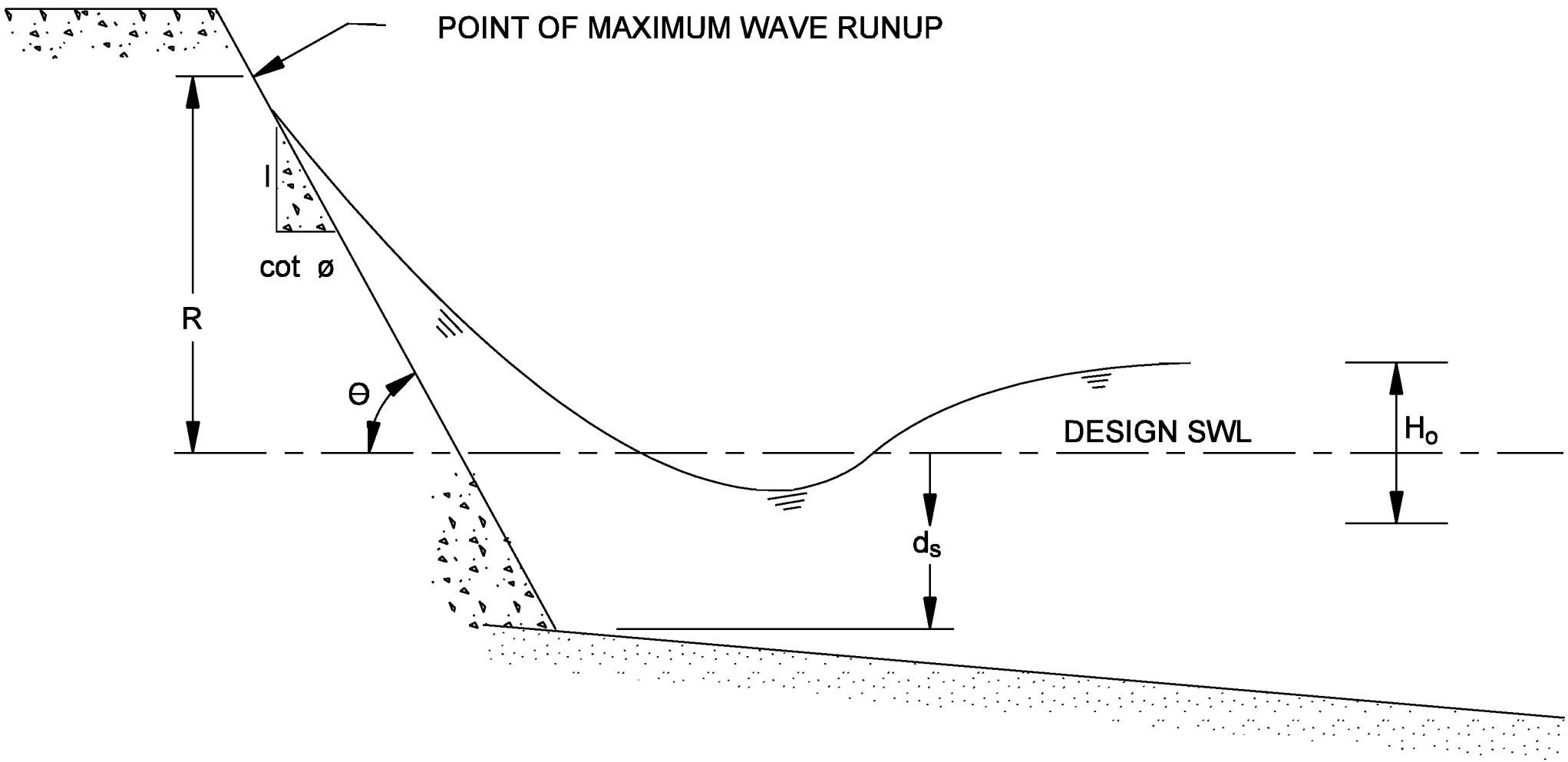

WAVE HEIGHT DEFINITION SKETCH

Figure 38-5B

Slope-Surface Characteristic	Placement Method	Correction Factor
Concrete blocks, voids < 20%	fitted	0.90
Concrete blocks, 20% ≤ voids < 40%	fitted	0.70
Concrete blocks, 40% ≤ voids ≤ 60%	fitted	0.50
Concrete pavement	---	1.00
Grass	---	0.85 – 0.90
Grouted rock	---	0.90
Rock riprap, angular	random	0.60
Rock riprap, hand-placed or keyed	keyed	0.80
Rock riprap, round	random	0.70
Wire-enclosed rocks or gabions	---	0.80

CORRECTION FACTORS FOR WAVE RUNUP

Figure 38-5C

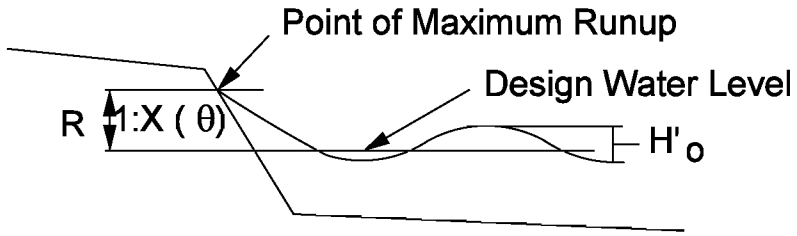

R = Wave Run Up Height (m)
H'_o = Wave Height (m)
θ = Bank Angle with the Horizontal

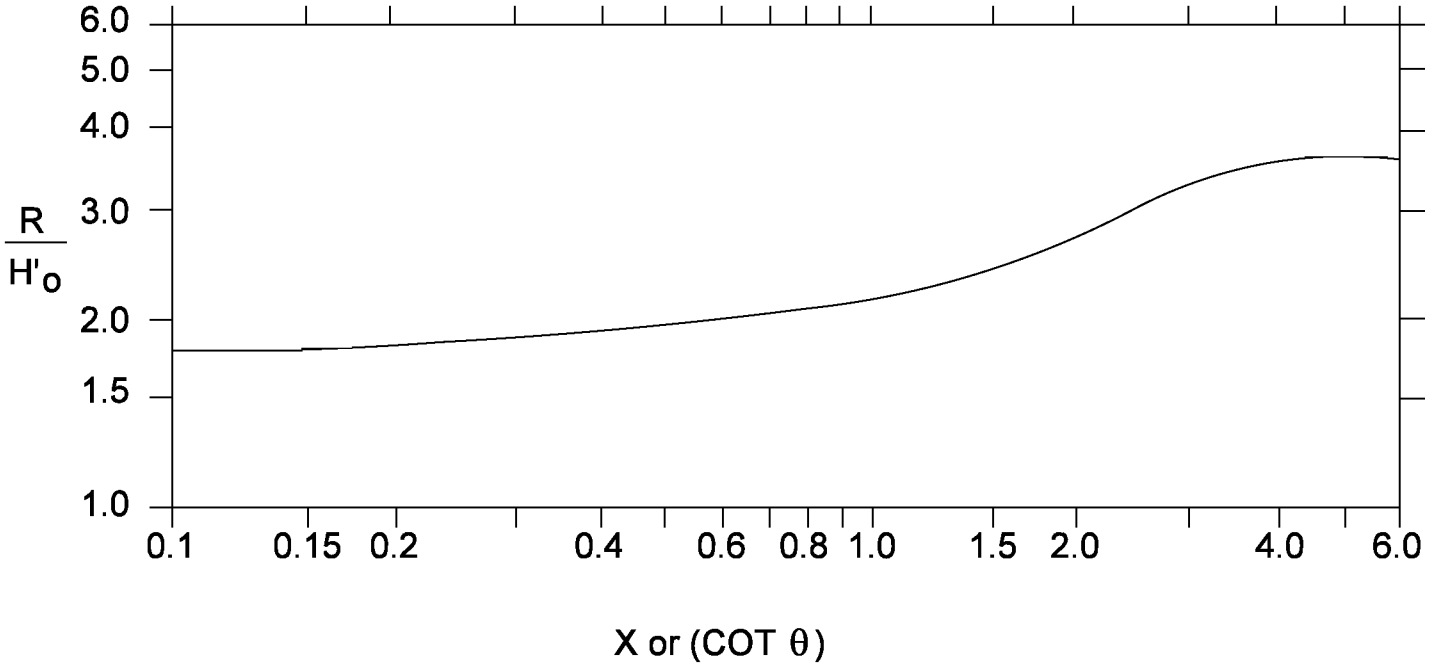

WAVE RUNUP ON SMOOTH, IMPERMEABLE SLOPES

Figure 38-5D

$$D_{50} = 0.00594 V_a^3/(d_{avg}^{1/2} K_1^{3/2}$$

D_{50} = Median Riprap Size (m)
V_a = Average velocity in main channel (m/s)
d_{avg} = Average depth in main channel (m)
K_1 = Bank angle correction term

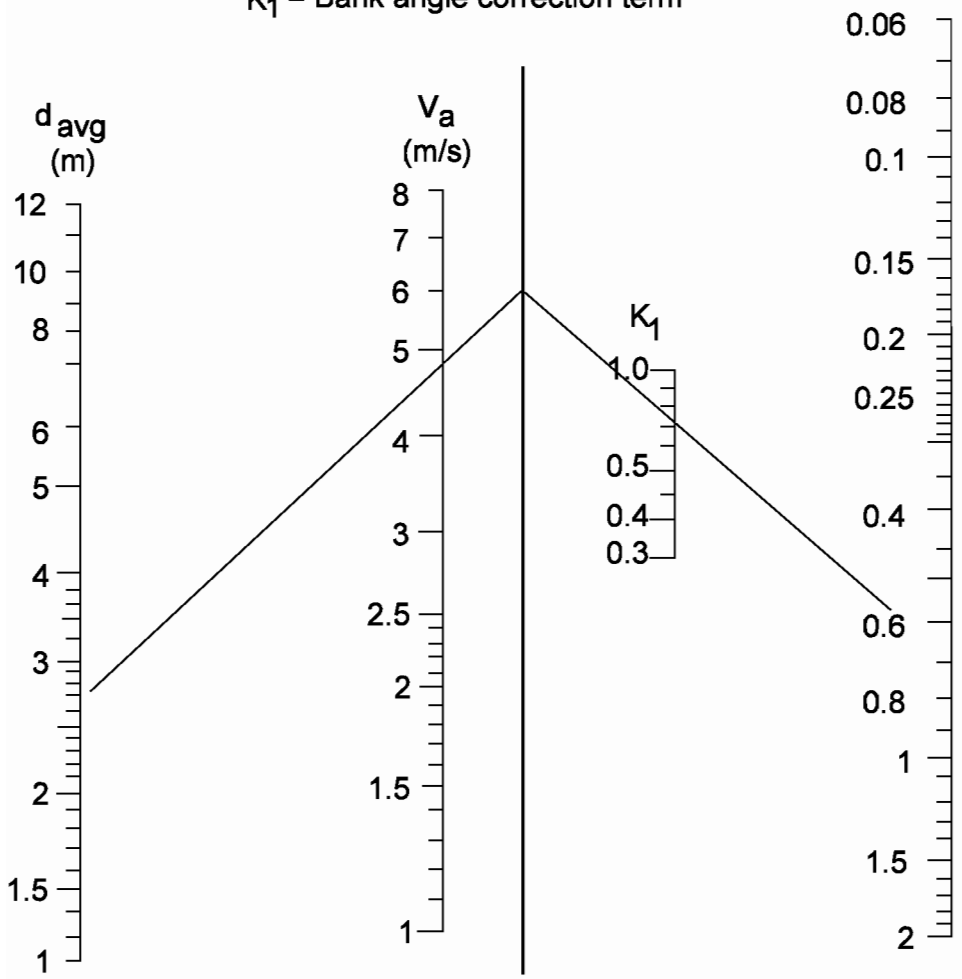

Example

Given:	Find:	Solution:
V_a = 4.9m/s	D_{50}	D_{50} = 0.69 m
d_{avg} = 2.75 m		
K_1 = 0.72		

RIPRAP SIZE RELATIONSHIP

FIGURE 38-6A

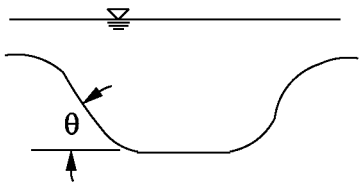

$$K_1 = \left[1 - \frac{\sin^2\theta}{\sin^2\phi} \right]^{0.5}$$

θ = Bank angle with horizontal

ϕ = Material angle of repose (See chart 4)

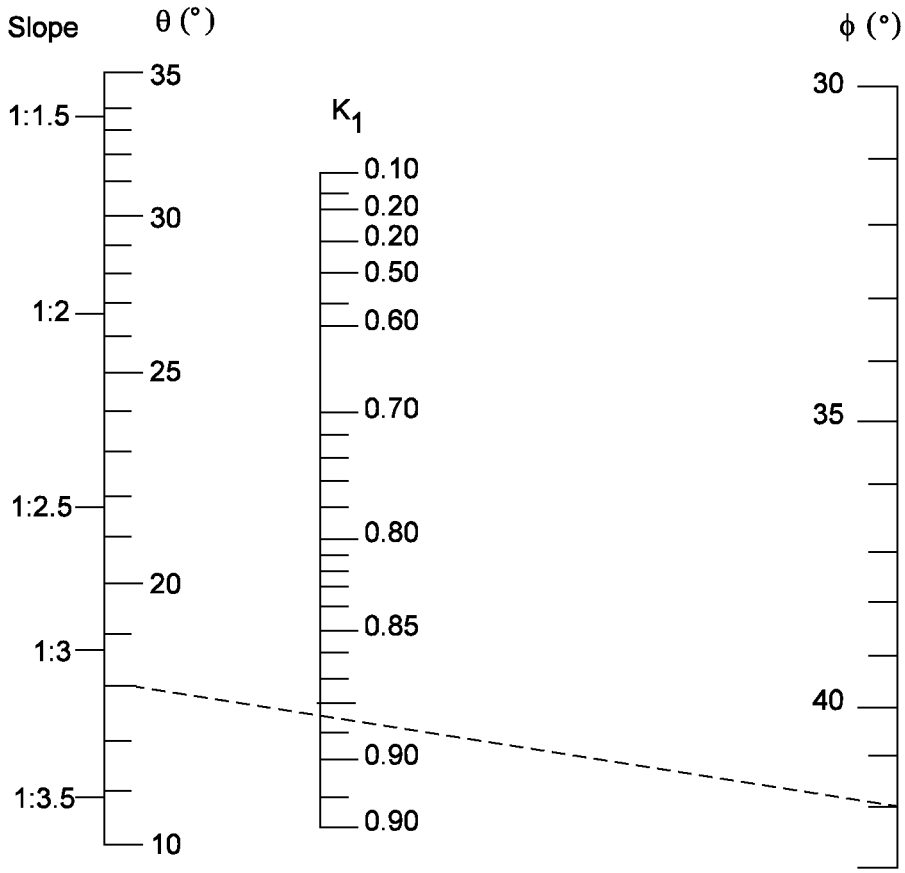

Example

Given:
θ = 16°
Very Angular
D_{50} = 457 mm

Find:
K_1

Solution:
ϕ = 42°
K_1 = 0.885

BANK ANGLE CORRECTION FACTOR (K_1) NOMOGRAPH

Figure 38-6B

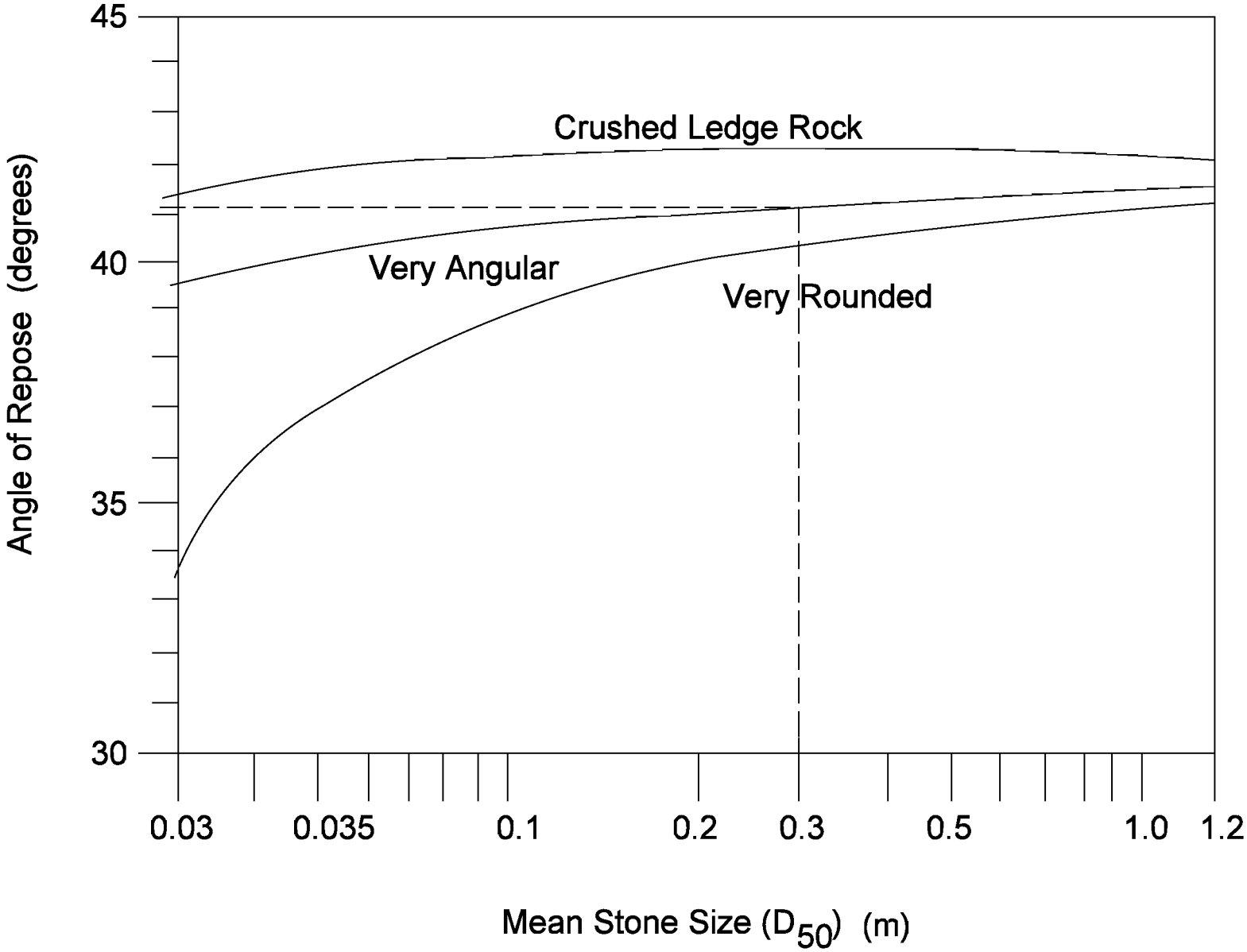

ANGLE OF REPOSE OF RIPRAP IN TERMS OF MEAN SIZE AND SHAPE OF STONE

Figure 38-6C

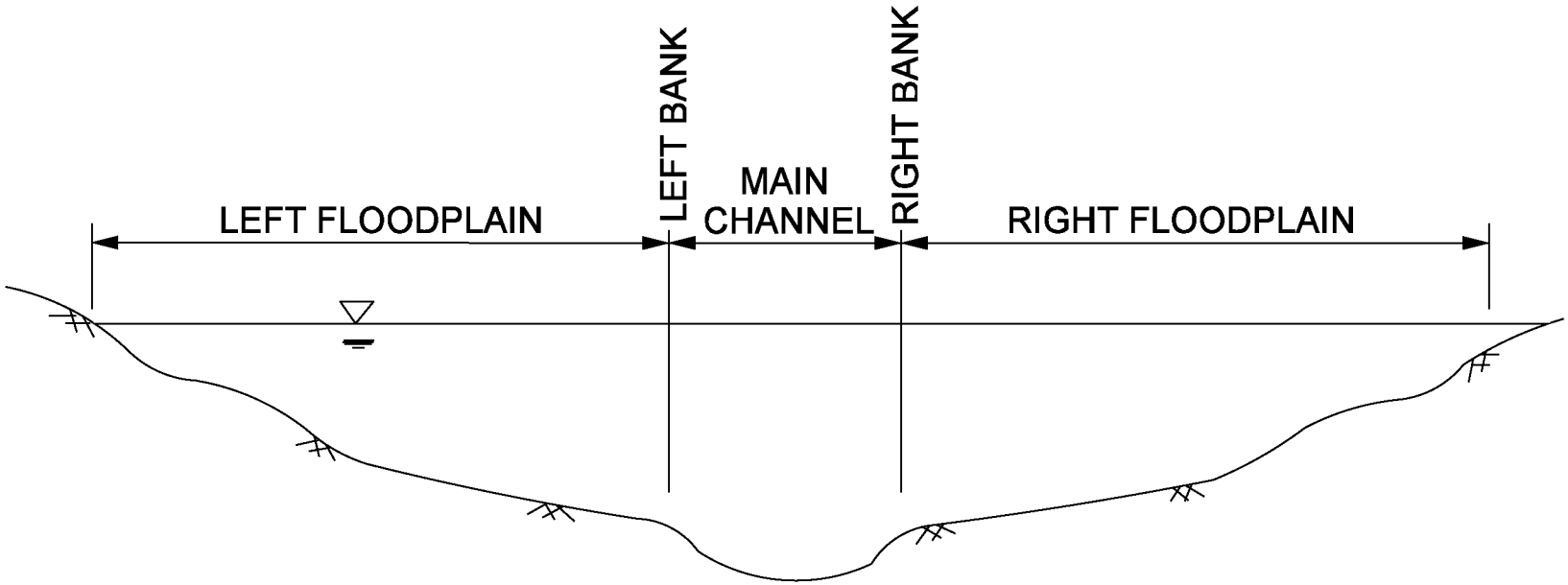

DEFINITION SKETCH
(Channel Flow Distribution)

Figure 38-6D

$$C = 1.61 SF^{1.5}/(S_S-1)^{1.5}$$

CORR=D_{50}CORRECTION FACTOR
SF = STABILITY FACTOR
S_S= SPECIFIC GRAVITY OF ROCK

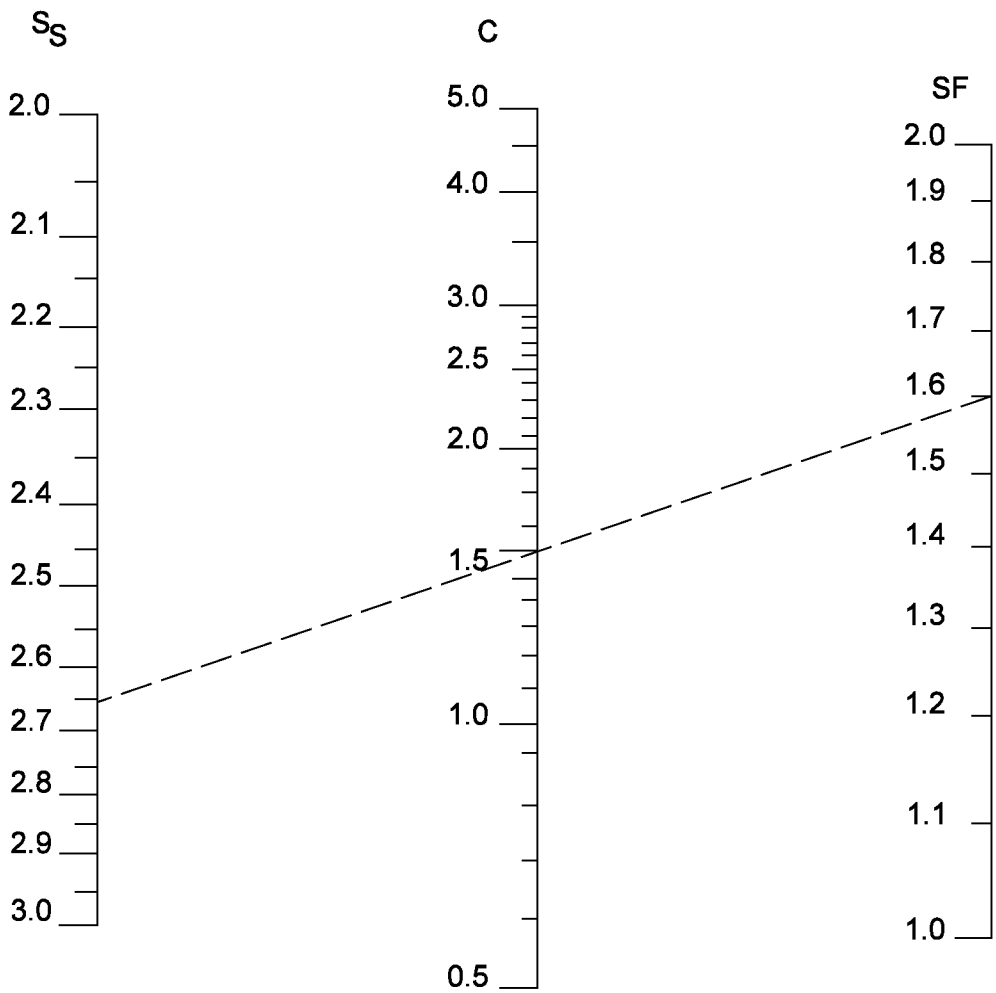

Example:

Given:	Find:	Solution:
S_S= 2.65	C	C = 1.59
SF = 1.60		

CORRECTION FACTOR FOR RIPRAP SIZE

Figure 38-6E

Conditions	Stability Factor Range
Uniform flow. Straight or mildly-curving reach, curve radius/channel width ≥ 30. Impact from wave action and floating debris is minimal. Little or no uncertainty in design parameters.	1.0 – 1.2
Gradually-varying flow. Moderate bend curvature, 10 < curve radius/channel width < 30. Impact from waves or floating debris moderate.	1.21 – 1.6
Approaching rapidly-varying flow. Sharp bend curvature, curve radius/channel width ≤ 10. Significant impact potential from floating debris or ice. Significant boat-generated waves, 0.3 to 0.6 m. High flow turbulence. Turbulently mixing flow at bridge abutment. Significant uncertainty in design parameters.	1.61 – 2.0

GUIDELINES FOR SELECTION OF STABILITY FACTORS

Figure 38-6F

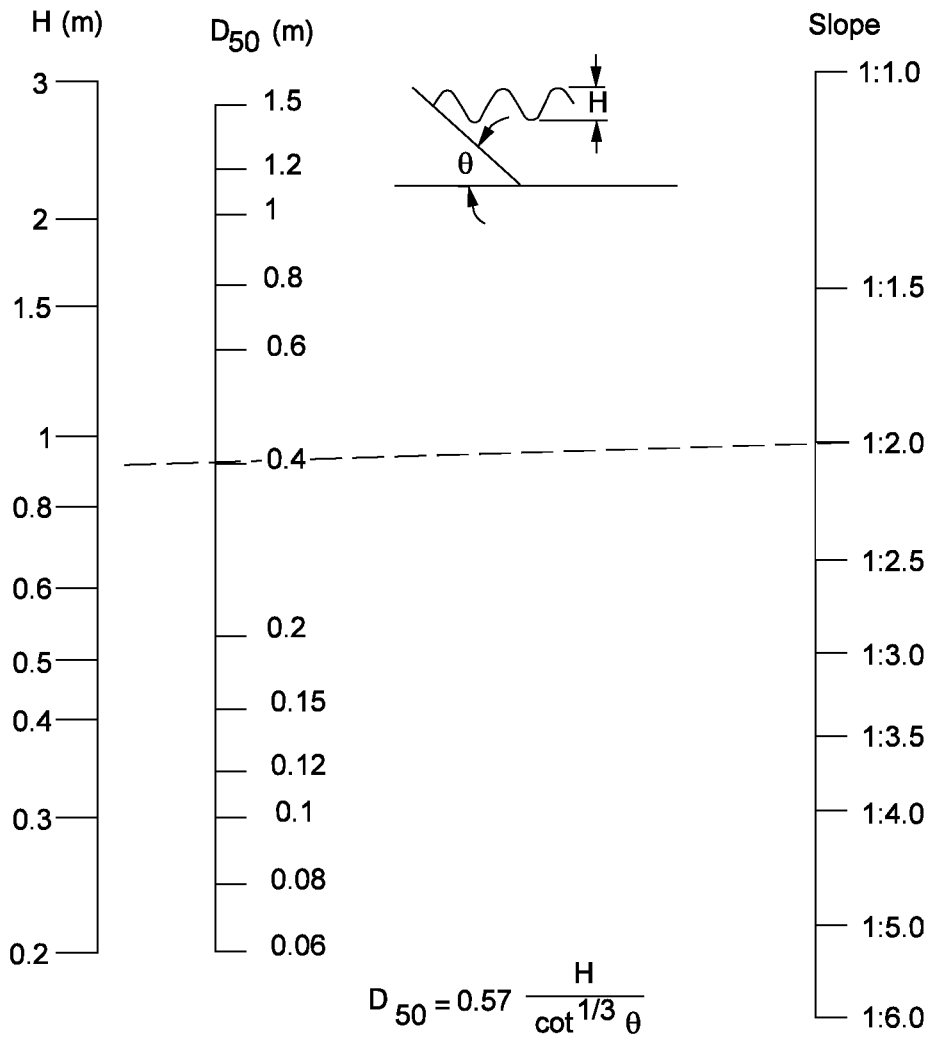

$$D_{50} = 0.57 \frac{H}{\cot^{1/3} \theta}$$

D_{50} = Median Riprap Size

H = Wave Height

θ = Bank Angle with Horizontal

Example

Given:	Find:	Solution:
Slope = 1V:2H	D_{50}	D_{50} = 0.4 m
H = 0.91 m		

HUDSON RELATIONSHIP FOR RIPRAP SIZE REQUIRED TO RESIST WAVE EROSION

Figure 38-6G

Stone-Size Range (m)	Stone-Weight Range (kg)	Percent of Gradation Smaller Than
$1.5D_{50}$ to $1.7D_{50}$	$3.0W_{50}$ to $5.0W_{50}$	100
$1.2D_{50}$ to $1.4D_{50}$	$2.0W_{50}$ to $2.75W_{50}$	85
$1.0D_{50}$ to $1.15D_{50}$	$1.0W_{50}$ to $1.5W_{50}$	50
$0.4D_{50}$ to $0.6D_{50}$	$0.1W_{50}$ to $0.2W_{50}$	15

ROCK RIPRAP GRADATION LIMITS

Figure 38-6H

Size, mm	Percent Smaller		
	Revetment	Class 1	Class 2
900			100
750		100	85-100
600	100	85-100	60-80
300	90-100	35-50	20-40
150	20-40	10-30	0-20
75	0-10	0-10	0-10
Minimum Depth of Riprap	0.5 m	0.6 m	0.9 m

Note: The material should be coarse aggregate, Class F or higher. See the INDOT Standard Specifications *for more information.*

RIPRAP GRADATION REQUIREMENTS

Figure 38-6 I

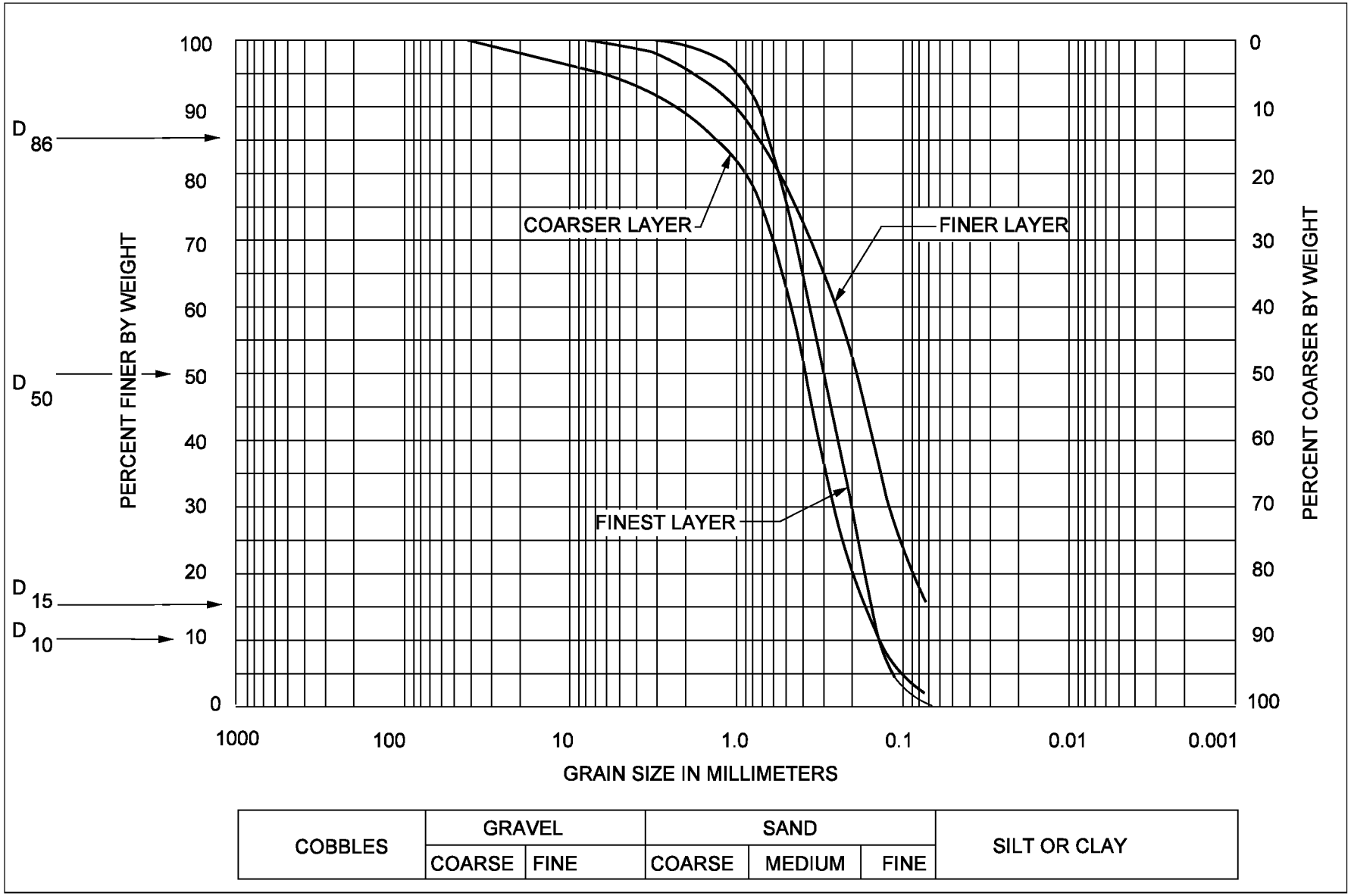

MATERIAL GRADATION

Figure 38-6J

ROUTE: _____ DES. NO.: _____ PROJECT NO.: _____
DESCRIPTION: _____
Prepared By: _____ Date: _____ Checked By: _____ Date: _____

GRANULAR FILTER

LAYER	DESCRIPTION	D_{15} (mm)	D_{85} (mm)	RATIO	$D1 = \frac{D_{15}Coarse}{D_{85}Fine}$	$D1 < 5 < D2$?	$D2 = \frac{D_{15}Coarse}{D_{15}Fine}$	$D2 < 40$?
						Yes ☐ No ☐		Yes ☐ No ☐
						Yes ☐ No ☐		Yes ☐ No ☐
						Yes ☐ No ☐		Yes ☐ No ☐
						Yes ☐ No ☐		Yes ☐ No ☐
						Yes ☐ No ☐		Yes ☐ No ☐
						Yes ☐ No ☐		Yes ☐ No ☐
						Yes ☐ No ☐		Yes ☐ No ☐

SUMMARY

LAYER DESCRIPTION	D_{15} (mm)	D_{85} (mm)	THICKNESS (mm)

FABRIC FILTER

Click When Done

Clear Data

PHYSICAL PROPERTIES CLASS: _____
HYDRAULIC PROPERTIES:
PIPING RESISTANCE < 50% PASSING #200 AOS < 0.6 mm
PIPING RESISTANCE < 50% PASSING #200 AOS < 0.3 mm
PERMEABILITY: SOIL PERMEABILITY < FABRIC PERMEABILITY
SELECTED FILTER FABRIC SPECIFICATIONS: _____

FILTER DESIGN

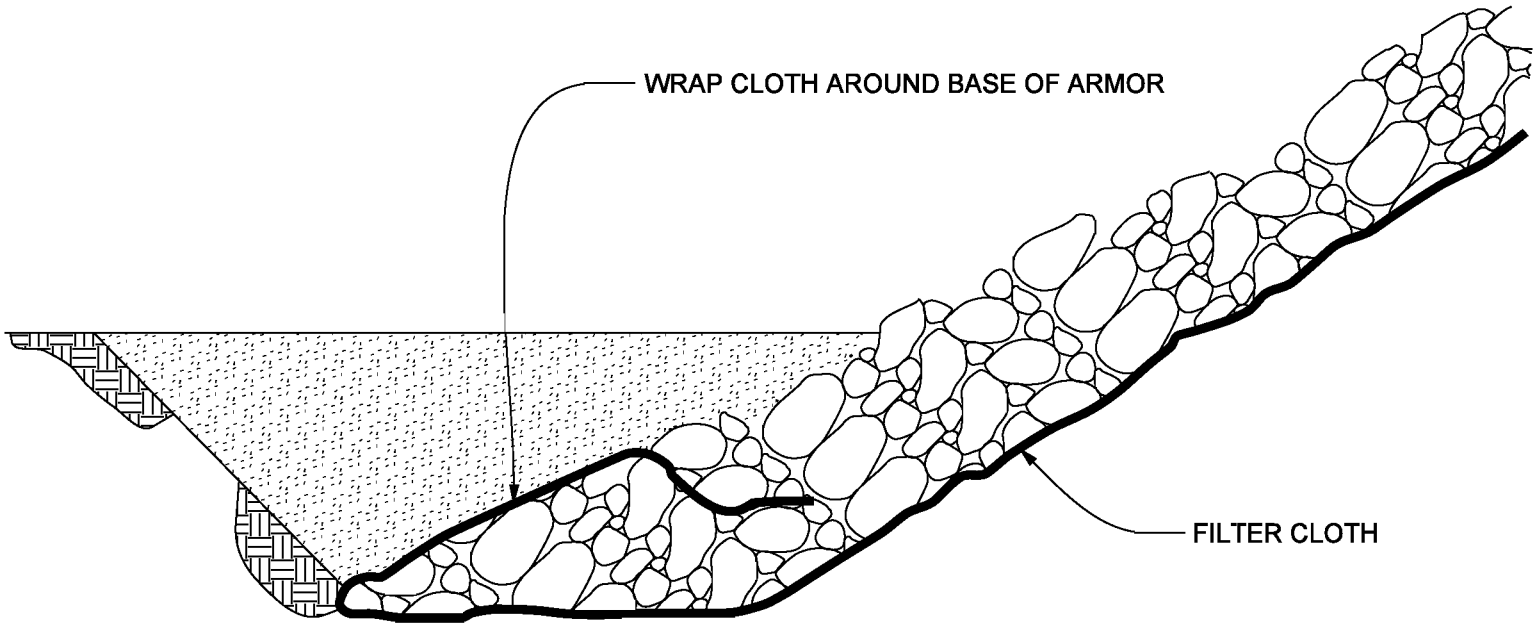

GEOTEXTILE FILTER

Figure 38-6L

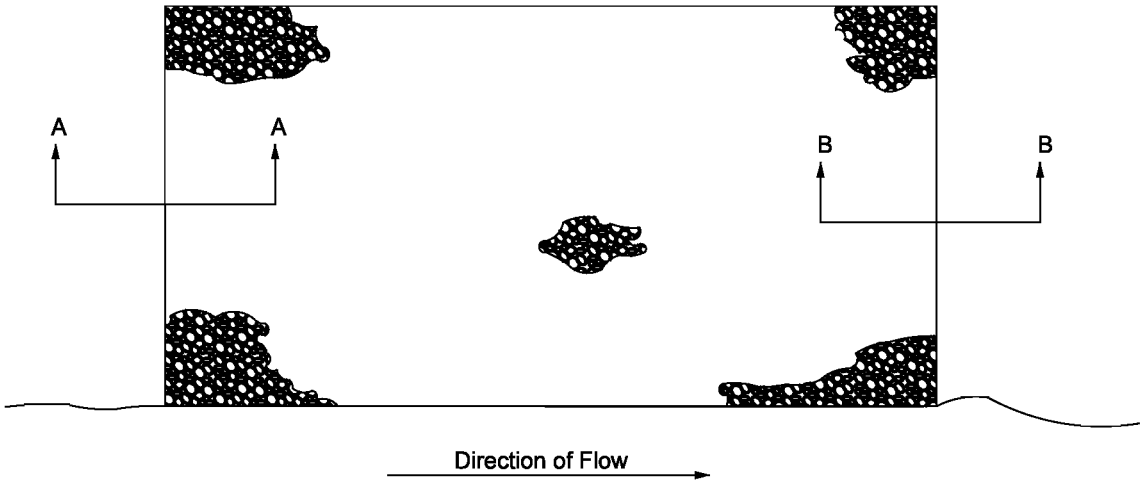

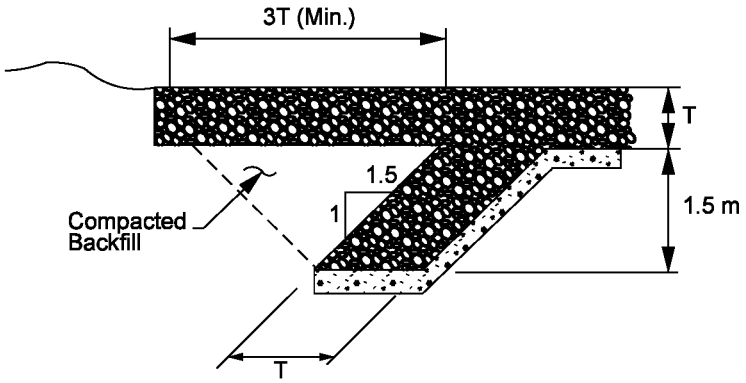

SECTION: A-A

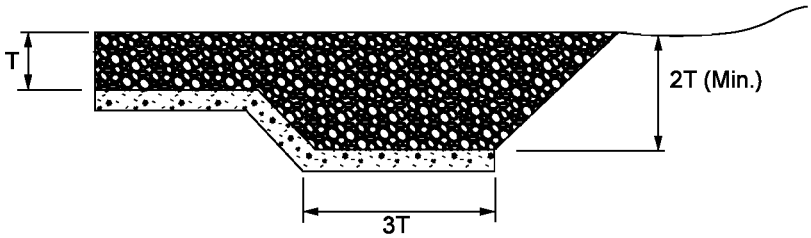

SECTION: B-B

TYPICAL RIPRAP INSTALLATION: PLAN AND FLANK DETAILS

Figure 38-6M

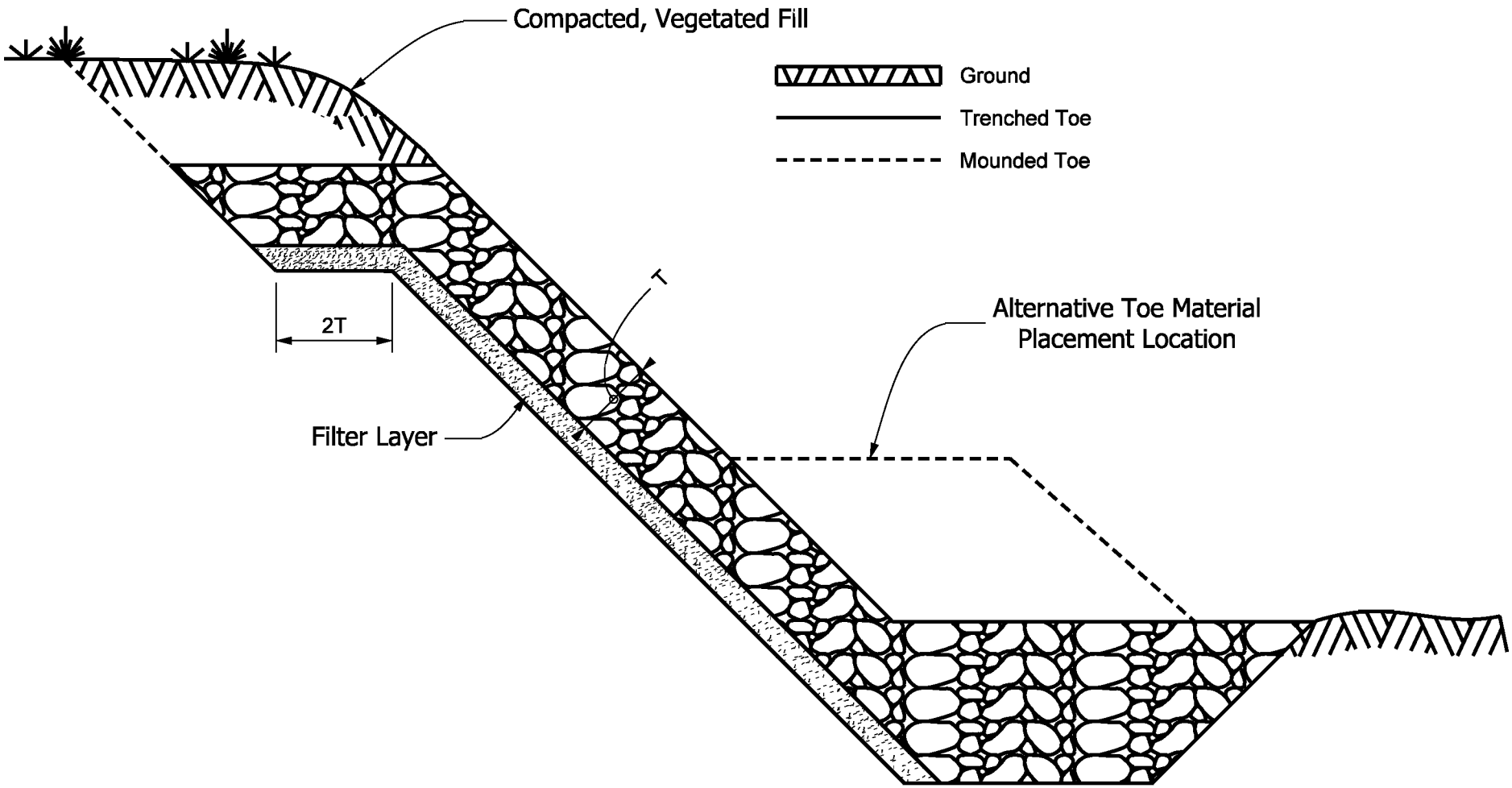

TYPICAL RIPRAP INSTALLATION: SIDE VIEW
(Bank Protection Only)

Figure 38-6N

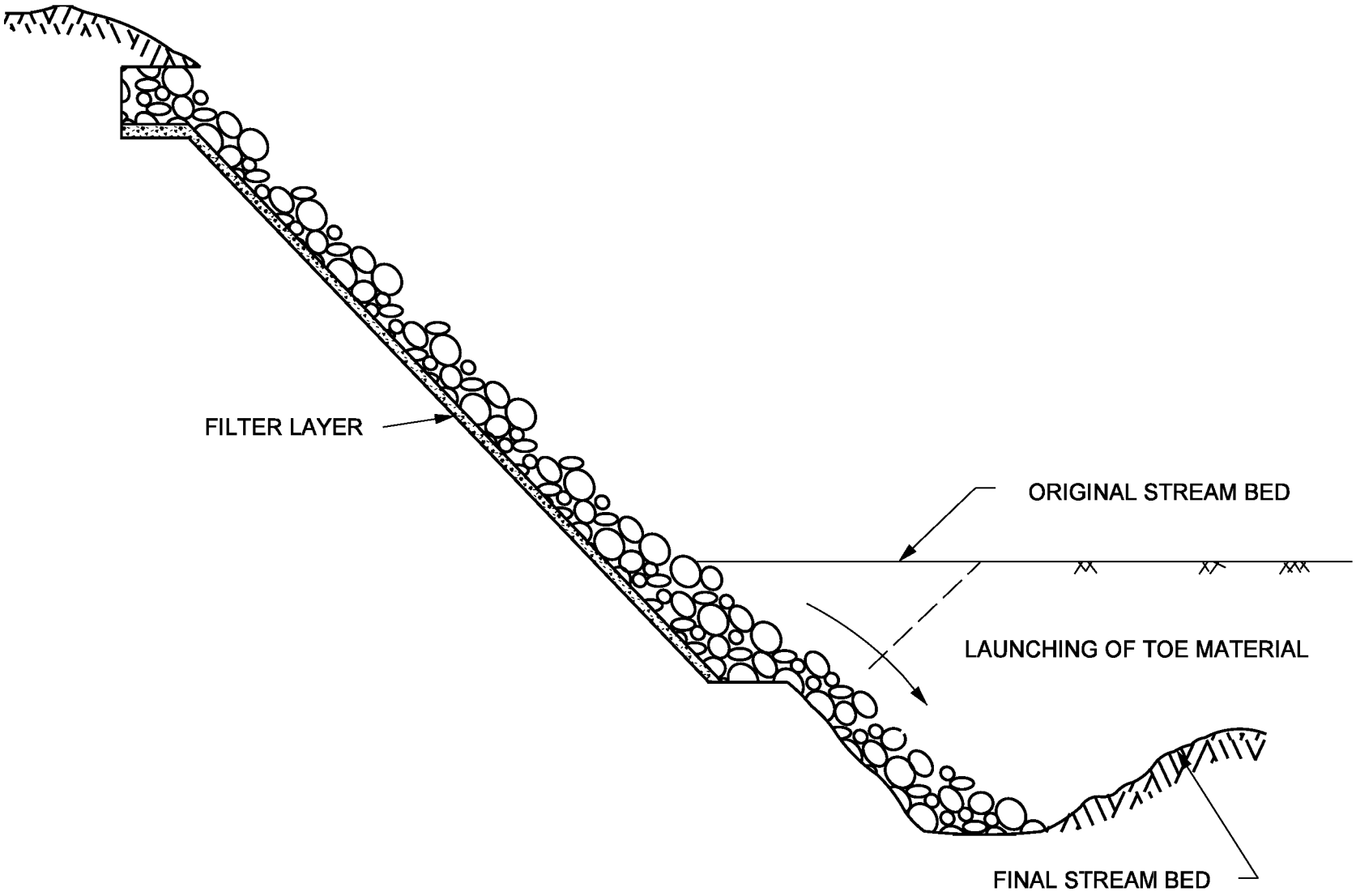

LAUNCHING OF RIPRAP TOE MATERIAL

Figure 38-6O

ROUTE: _____ DES. NO.: _____ PROJECT NO.: _____
DESCRIPTION: _____
Prepared By: _____ Date: _____ Checked By: _____ Date: _____

Definition Sketch

Definition Sketch for Riprap Size Particle Erosion

Q_{TOTAL} _____
Q_{MC} _____
Q_{LB} _____
Q_{RB} _____

Soil Characteristics:
D_{15} _____
D_{50} _____
D_{85} _____

DEPTH OR W.S. (m) (1)	A (m^2) (2)	V_g (m/s) (3)	d_a (m) (4)	θ (5)	Φ (6)	K_1 (7)	D_{50} (mm) (8)	SF (9)	S_S (10)	C (11)	$C_{P/A}$ (12)	D_{50} (mm) (13)	NOTES

Design Sketch

RIPRAP CHARACTERISTICS:
Size: _____ Thickness: _____
D_{50} _____ $2D_{50}$ _____
Class _____ D_{100} _____
AASHTO Use _____
Gradation:

Size: (mm)	Percent Finer
_____	100
_____	50
_____	5-10

FABRIC CHARACTERISTICS:
Granular:

Size: (mm)	Percent Finer
_____	100
_____	50
_____	5-10

Fabric: AOS < _____ mm
Perm. > _____ mm

(1) Water surface elevation
(2) Main channel flow area
(3) Main channel average velocity
(4) Main channel average depth
(5) Bank angle
(6) Riprap angle of repose (Fig. 38-6C)
(7) Bank angle correction (Fig. 38-6B)
(8) Riprap size (Fig. 38-6A)
(9) Stability factor
(10) Riprap specific gravity
(11) Riprap size correction factor (Fig. 38-6E)
(12) Pier/abutment correction (3.38 if applicable)
(13) Correction D_{50} = (8) x (11) x (12)

RIPRAP SIZE PARTICLE EROSION

Click When Done

Clear Data

Back To Riprap Size Particle Erosion

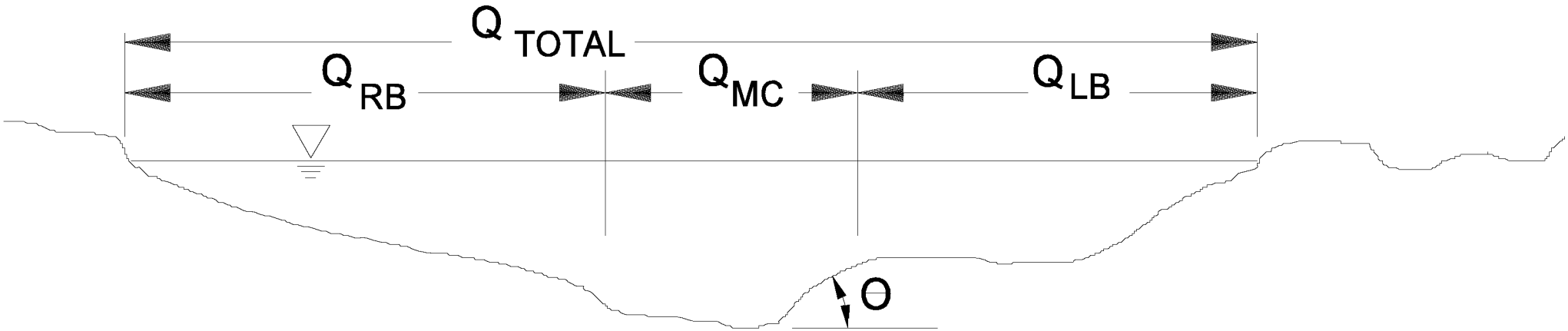

DEFINITION SKETCH FOR RIPRAP SIZE PARTICLE EROSION

Back To Riprap Size Particle Erosion

ROUTE: _____ DES. NO.: _____ PROJECT NO.: _____ Sheet ____ o f ____
DESCRIPTION: _____
Prepared By: _____ Date: _____ Checked By: _____ Date: _____

Definition Sketch

Definition Sketch for Data Sheet

WIND SPEED (km/h)	FETCH (km)	R_v (m)	H_o (m)	$\frac{R_v}{H_o}$	Θ	CORR. FACTOR	D_{50} (mm)

RIPRAP SIZE:
D_{50} _____
Class _____

REVETMENT THICKNESS:
$2D_{50}$ _____
D_{100} _____
Use _____

AASHTO GRADATION:

Size: (mm)	Percent Finer
_____	100
_____	50
_____	5-10

RIPRAP DATA WORKSHEET

Click When Done Clear Data

Back To Data Sheet

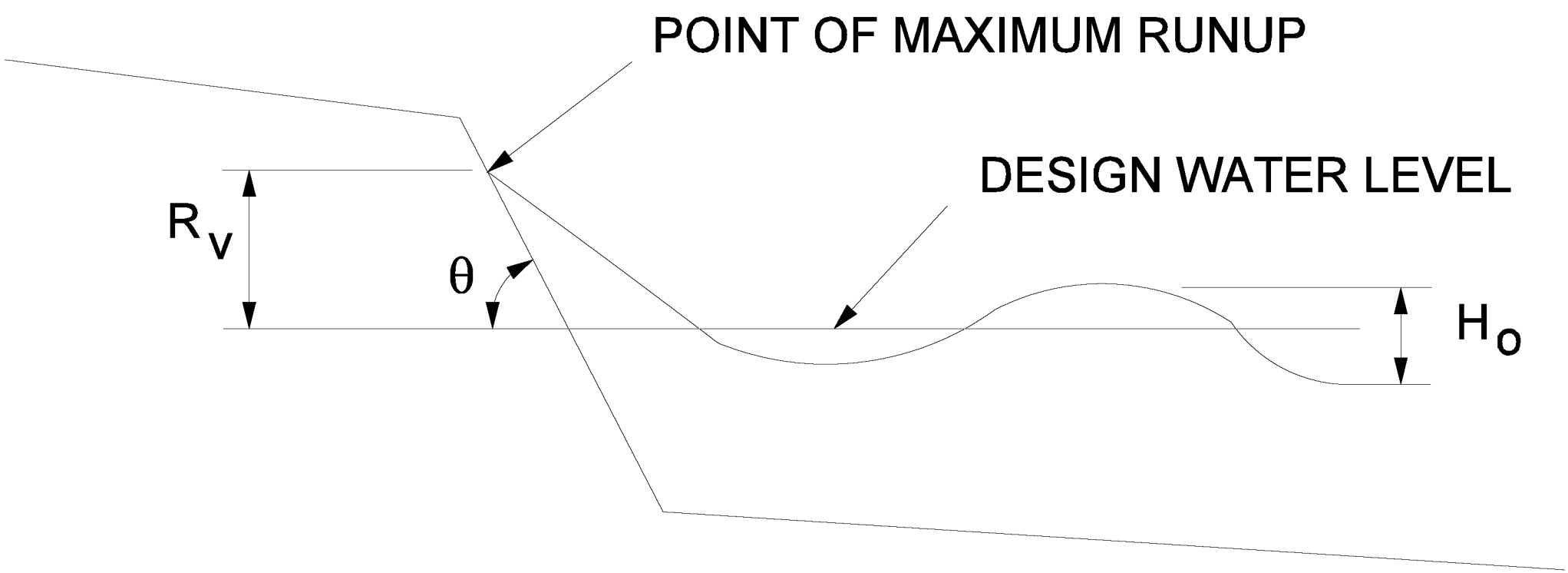

DEFINITION SKETCH FOR DATA SHEET

Back To Data Sheet

PROJECT: Example 1
DESCRIPTION:

Prepared by/Date: SAB / 2/4
Checked by/Date: CJH / 3/4
Sheet ____ of ____

Definition Sketch:

Definition Sketch for Example

Q_{TOTAL} 140
Q_{MC} 140
Q_{LB}
Q_{RB}

Soil Characteristics:
D_{15} 1.37 mm
D_{50} 12.2 mm
D_{85} 32 mm

DEPTH OR W.S. (m) (1)	A (m^2) (2)	V_g (m/s) (3)	d_a (m) (4)	θ (5)	Φ (6)	K_1 (7)	D_{50} (mm) (8)	SF (9)	S_S (10)	C (11)	$C_{P/A}$ (12)	D_{50} (mm) (13)	NOTES (14)
3.60	47.8	2.96	3.60	2:1	41°	0.73	131	1.2	2.65	1	N/A	131	Bank
							85	1.2	2.65	1	N/A	85	Bed

Design Sketch:

Design Sketch for Example

RIPRAP CHARACTERISTICS:

Size:
D_{50} 290
Class Facing
AASHTO Gradation:

Size: (mm)	Percent Finer
395	100
290	50
120	5-10

Thickness:
$2D_{50}$ 580
D_{100} 395
Use 600

FABRIC CHARACTERISTICS:

Granular:

Size (mm)	Percent Finer
60	85
50	50
30	15

Fabric:
AOS < ____
Perm. > ____

Average Opening Size

(1) Water surface elevation
(2) Main channel flow area
(3) Main channel average velocity
(4) Main channel average depth
(5) Bank angle
(6) Riprap angle of repose (Figure 38-6C)
(7) Bank angle correction (Figure 38-6B)
(8) Riprap size (Figure 38-6A)
(9) Stability factor
(10) Riprap specific gravity
(11) Riprap size correction factor (Figure 38-6E)
(12) Pier/abutment correction (3.38 if applicable)
(13) Correction D_{50} = (8) x (11) x (12)
(14) Notes or comments

RIPRAP SIZE FORM (Example 1)

Figure 38-6R

Back To Riprap Size Form

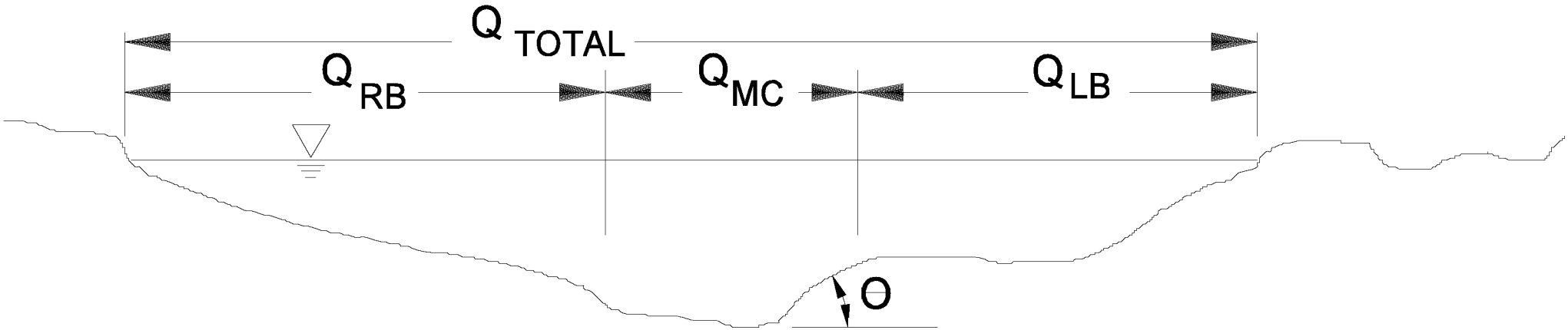

DEFINITION SKETCH

Back To Riprap Size Form

Back To Riprap Size Form

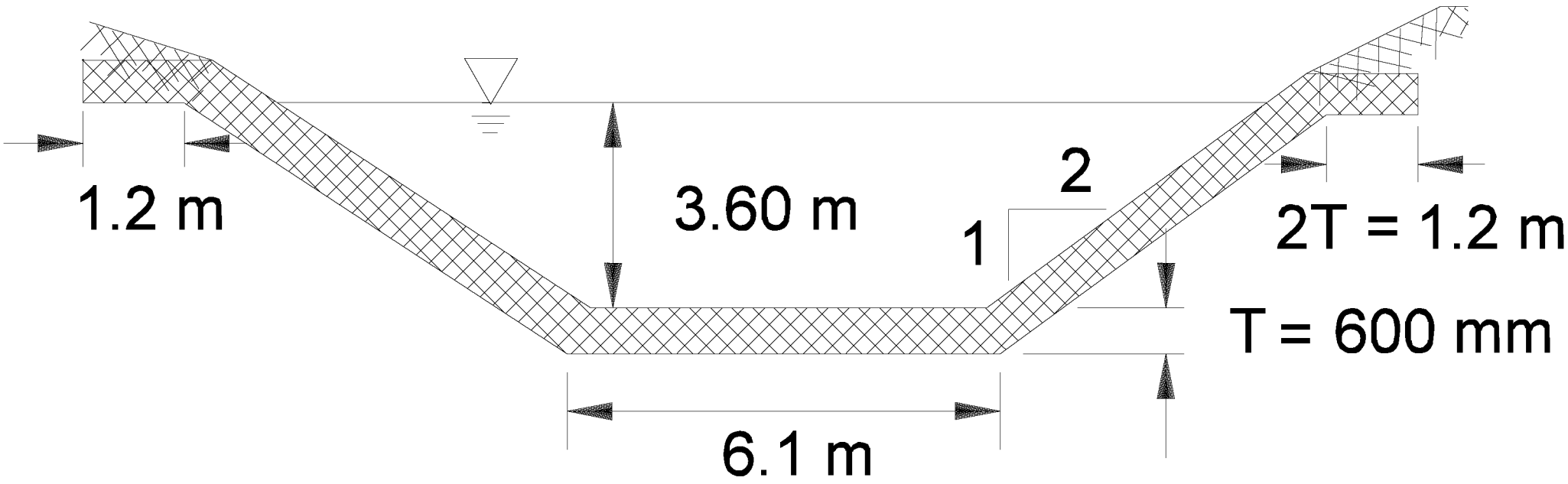

DESIGN SKETCH

Back To Riprap Size Form

$$D_{50} = 0.00594\ V_a^3/(d_{avg}^{1/2} K_1^{3/2})$$

D_{50} = Median riprap size (m)

V_a = Average velocity in main channel (m/s)

d_{avg} = Average depth in main channel (m)

K_1 = Bank angle correction term

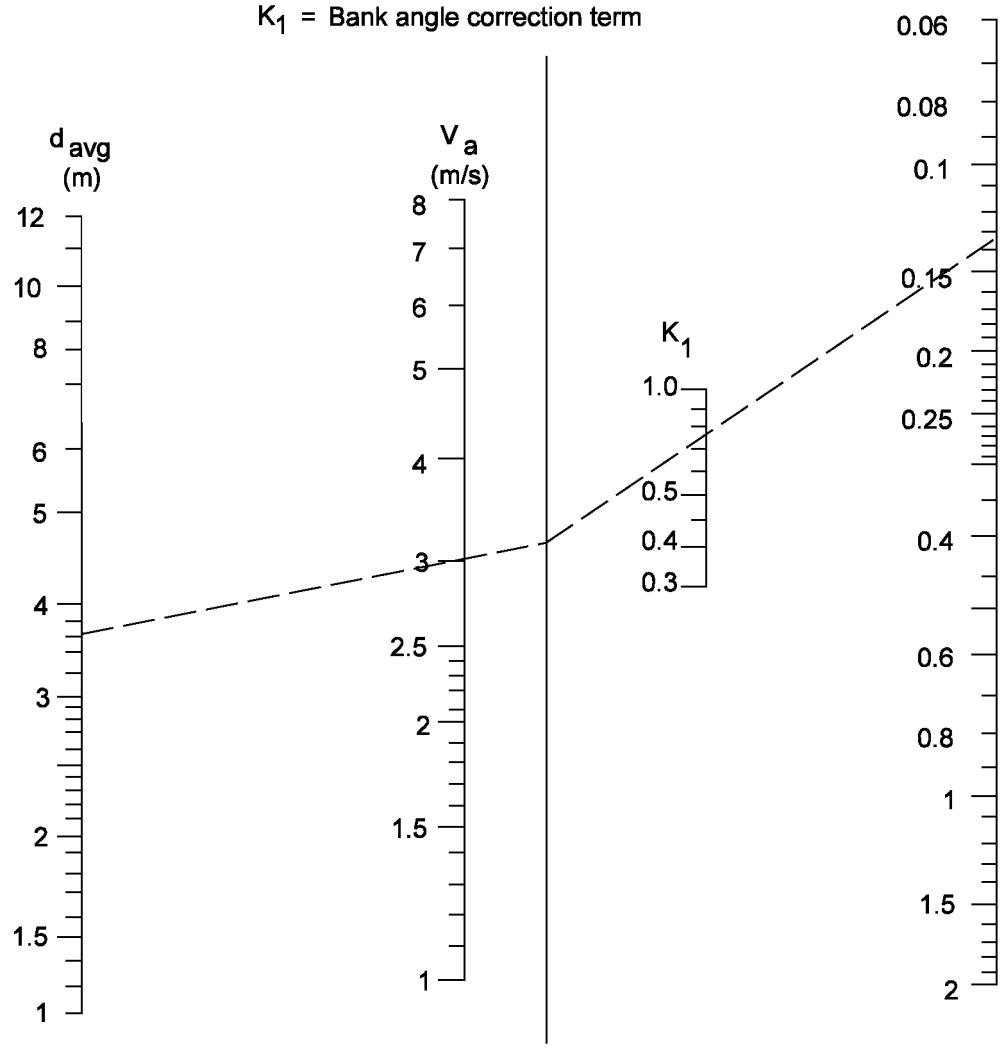

Example

Given:	Find:	Solution:
$V_a = 3$ m/s	D_{50}	$D_{50} = 0.13$ m
$d_{avg} = 3.6$ m		
$K_1 = 0.73$		

RIPRAP SIZE RELATIONSHIP
(Example 1, Step 7)

Figure 38-6S

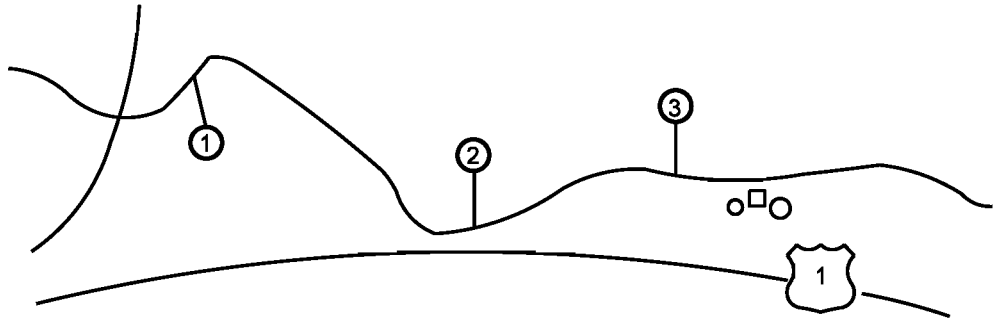

A) SITE LOCATION

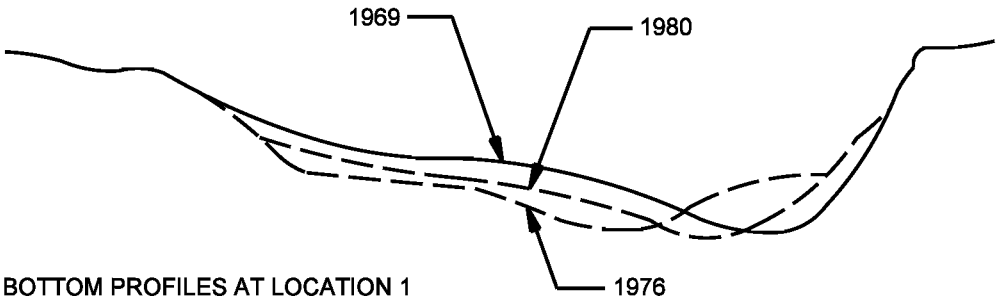

B) BOTTOM PROFILES AT LOCATION 1

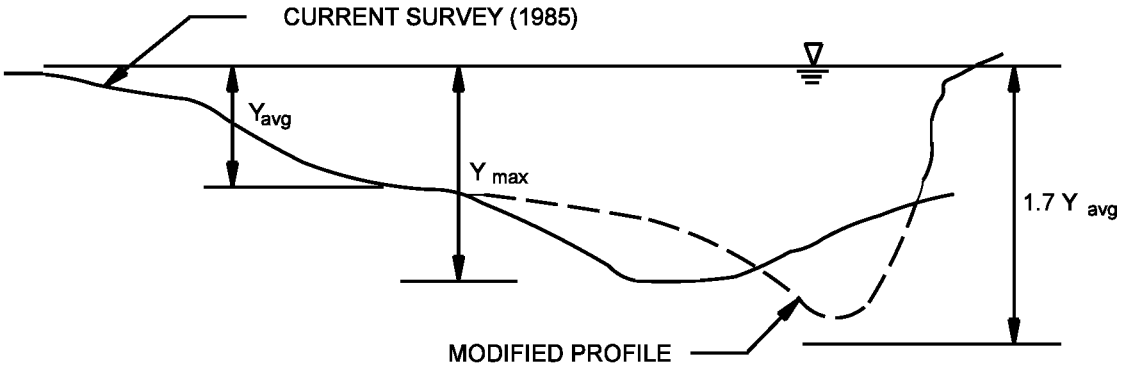

C) BOTTOM PROFILE AND MODIFIED PROFILE AT LOCATION 2

CHANNEL GEOMETRY DEVELOPMENT (Example 2)

Figure 38-6T

PROJECT: Example 2
DESCRIPTION:

Prepared by/Date: _____ / _____
Checked by/Date: _____ / _____
Sheet _____ of _____

Definition Sketch:

Q_{TOTAL} _____
Q_{MC} _____
Q_{LB} _____
Q_{RB} _____

Soil Characteristics:
D_{15} _____
D_{50} _____
D_{85} _____

DEPTH OR W.S. (m) (1)	A (m^2) (2)	V_g (m/s) (3)	d_a (m) (4)	θ (5)	Φ (6)	K_1 (7)	D_{50} (mm) (8)	SF (9)	S_S (10)	C (11)	$C_{P/A}$ (12)	D_{50} (mm) (13)	NOTES (14)
4.57	255	3.84	3.66	2:1	41°	0.73	274	1.6	2.6	1.6	1	438	Sharp Bend

Design Sketch:

RIPRAP CHARACTERISTICS:

Size:
D_{50} 549
Class _____
AASHTO Gradation:

Thickness:
$2D_{50}$ 1098
D_{100} 686
Use 1100

Size: (mm)	Percent Finer
686	100
549	50
290	5-10

FABRIC CHARACTERISTICS:

Granular:

Size (mm)	Percent Finer
_____	85
_____	50
_____	15

Fabric:
AOS < _____
Perm. > _____

Average Opening Size

(1) Water surface elevation
(2) Main channel flow area
(3) Main channel average velocity
(4) Main channel average depth
(5) Bank angle
(6) Riprap angle of repose (Figure 38-6C)
(7) Bank angle correction (Figure 38-6B)
(8) Riprap size (Figure 38-6A)
(9) Stability factor
(10) Riprap specific gravity
(11) Riprap size correction factor (Figure 38-6E)
(12) Pier/abutment correction (3.38 if applicable)
(13) Correction D_{50} = (8) x (11) x (12)
(14) Notes or comments

RIPRAP SIZE FORM (Example 2)
Figure 38-6U

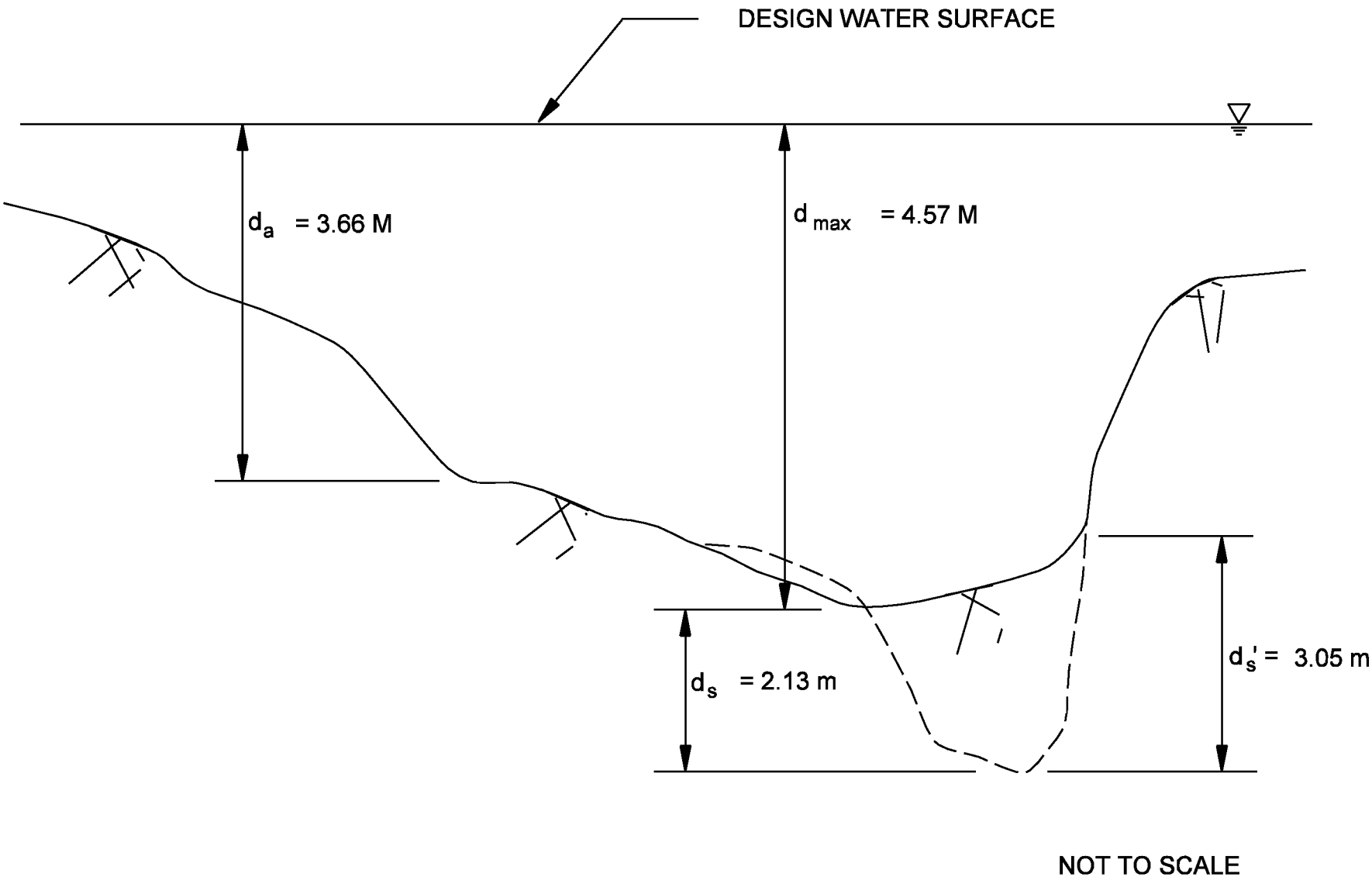

CHANNEL CROSS SECTION FOR EXAMPLE 2 ILLUSTRATING FLOW AND POTENTIAL SCOUR DEPTHS

Figure 38-6V

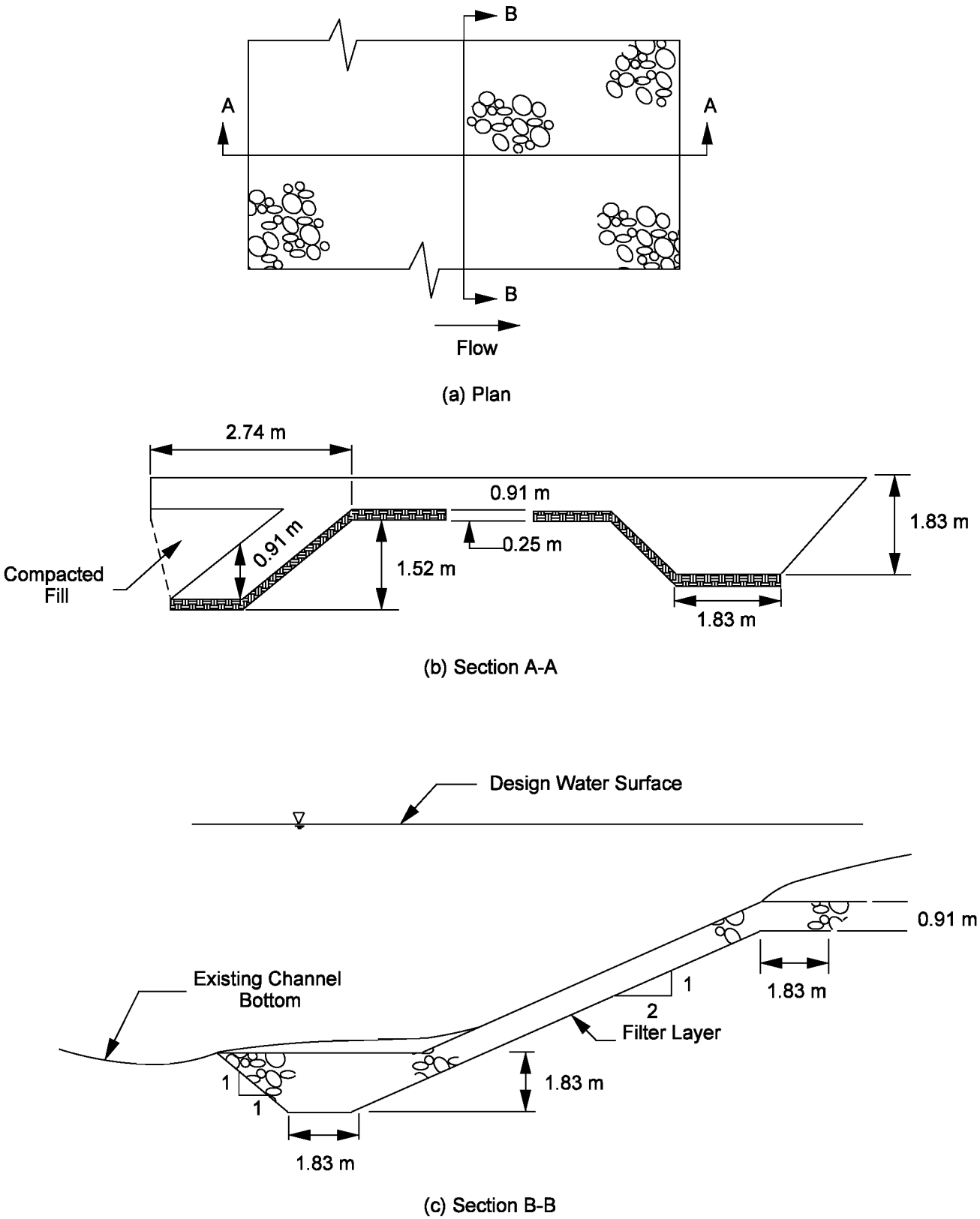

TOE AND FLANK DETAILS
(Example 2)

Figure 38-6W

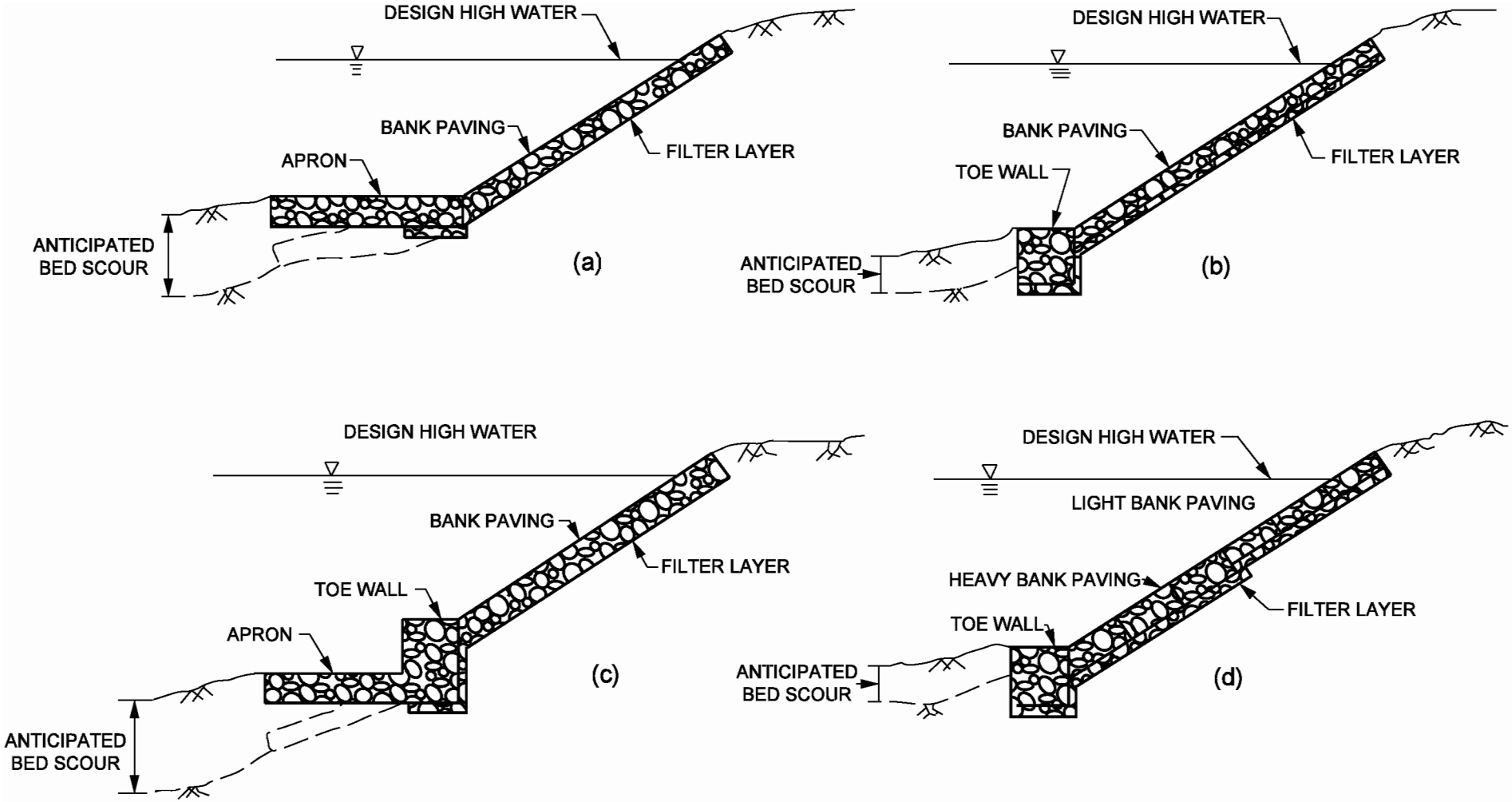

ROCK AND WIRE MATTRESS CONFIGURATION

Figure 38-6X

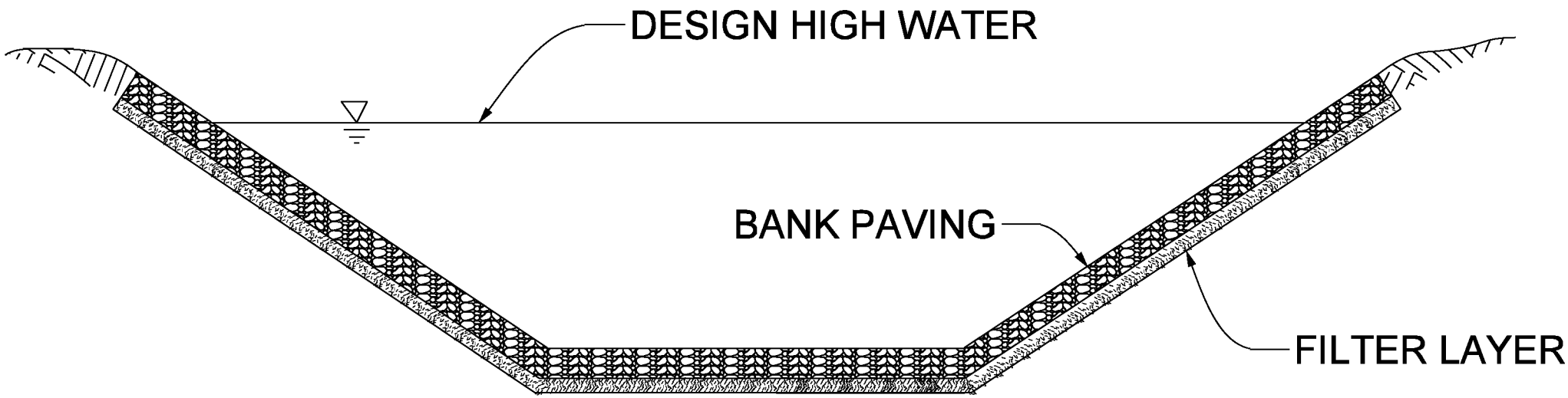

ROCK AND WIRE MATTRESS INSTALLATION COVERING
THE ENTIRE CHANNEL PERIMETER

Figure 38-6Y

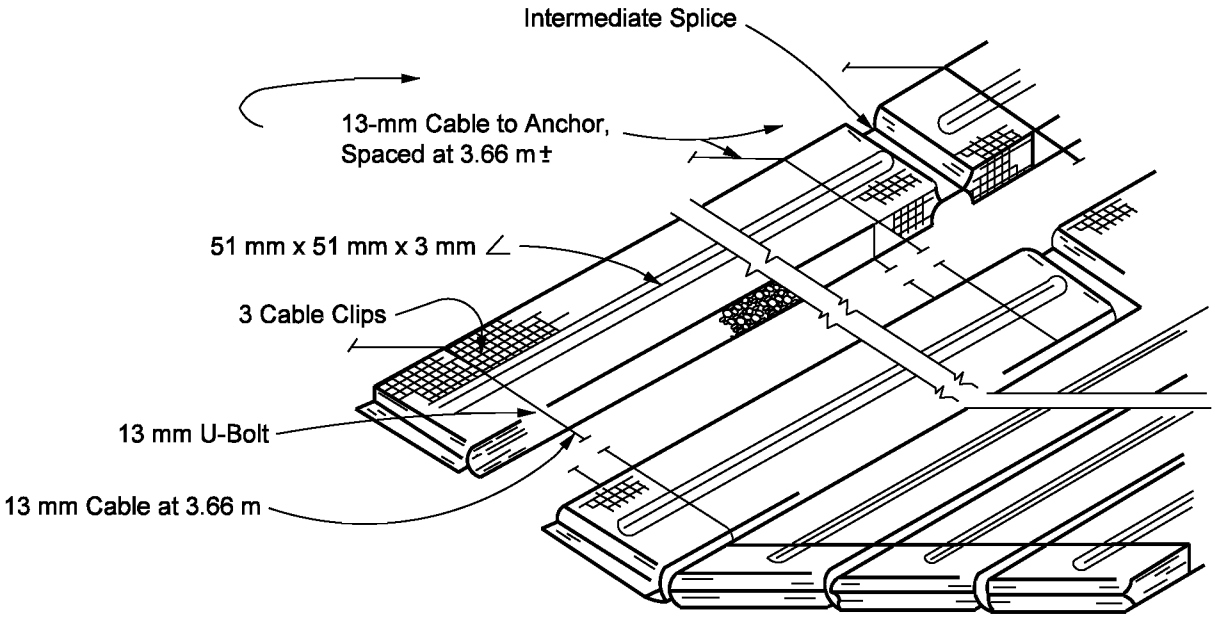

Mattress Layout

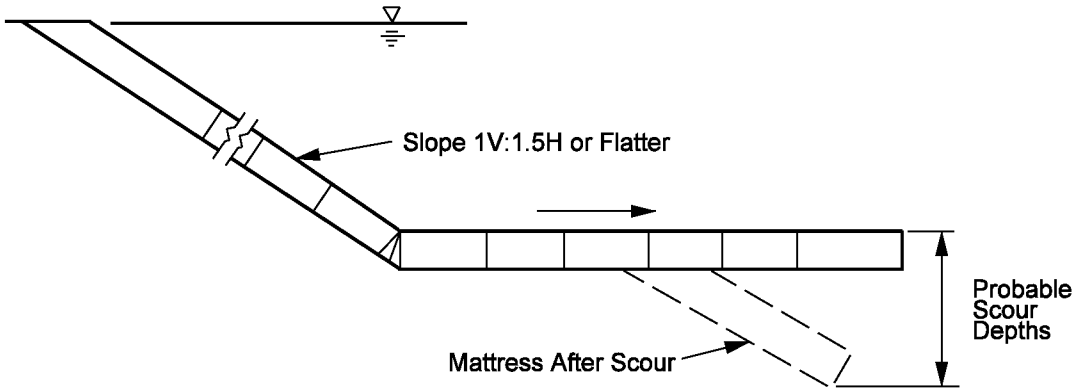

Section

TYPICAL DETAIL OF ROCK AND WIRE MATTRESS
(Constructed from Available Wire Fencing Materials)

Figure 38-6Z

Thickness (m)	Width (m)	Length (m)	Wire-Mesh Opening Size (mm x mm)
0.23	1.83	2.74	64 x 83
0.23	1.83	3.66	64 x 83
0.30	0.91	1.83	83 x 114
0.30	0.91	2.74	83 x 114
0.30	0.91	3.66	83 x 114
0.46	0.91	1.83	83 x 114
0.46	0.91	2.74	83 x 114
0.46	0.91	3.66	83 x 114
0.91	0.91	1.83	83 x 114
0.91	0.91	2.74	83 x 114
0.91	0.91	3.66	83 x 114

STANDARD GABION SIZES

Figure 38-6AA

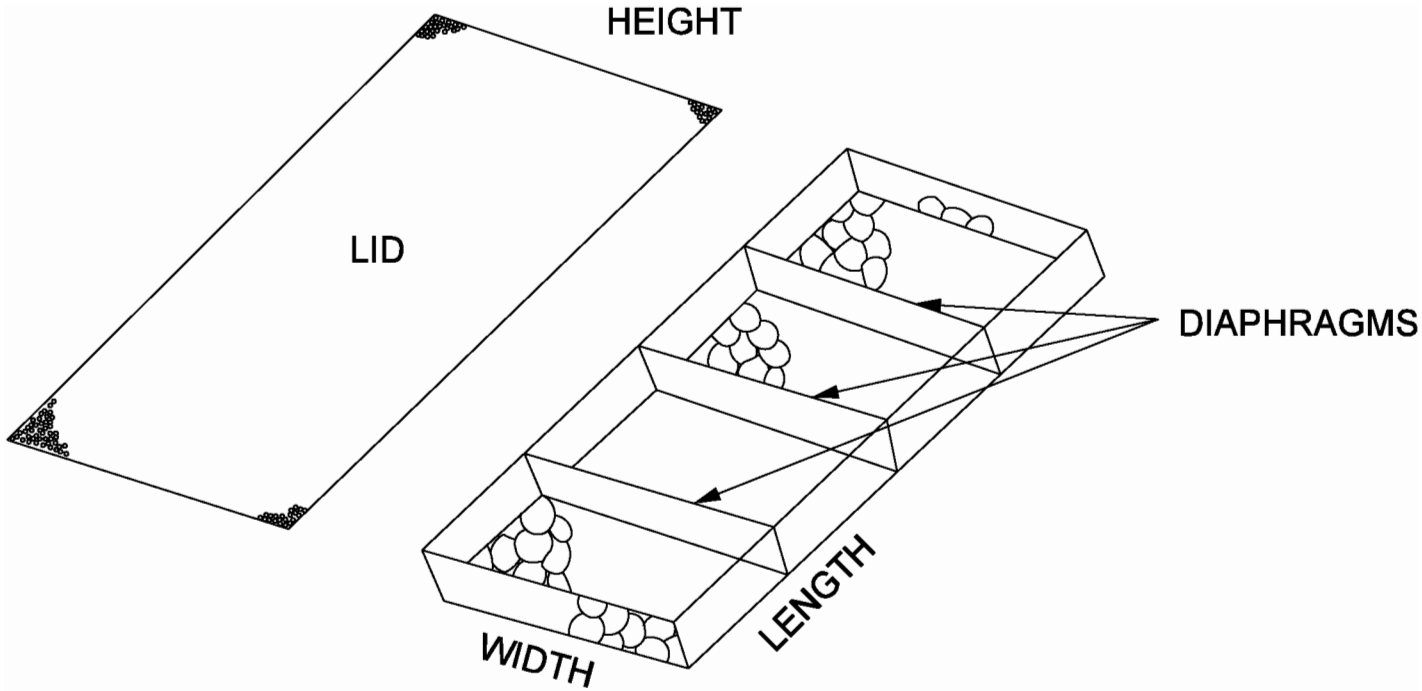

MATTRESS CONFIGURATION

Figure 38-6BB

Bank Soil Type	Maximum Velocity (m/s)	Bank Slope (H:V)	Minimum Required Mattress Thickness (mm)
Clay, Heavy Cohesive Soils	3.0	Flatter than 1:3	230
	4.0 – 4.9	Steeper than 1:2	300
	any	Steeper than 1:2	≥ 460
Silt, fine sand	3.0	Flatter than 1:2	300
Shingle with Gravel	4.9	Flatter than 1:3	230
	6.0	Flatter than 1:2	300
	any	Steeper than 1:2	≥ 460

CRITERIA FOR GABION THICKNESS

Figure 38-6CC

Nominal Diameter of Wire (mm)	Minimum Coating Weight, Class 3 or A Coating (g/m^2)
2.18	220
2.69	230
3.43	260

MINIMUM COATING WEIGHT

Figure 38-6DD

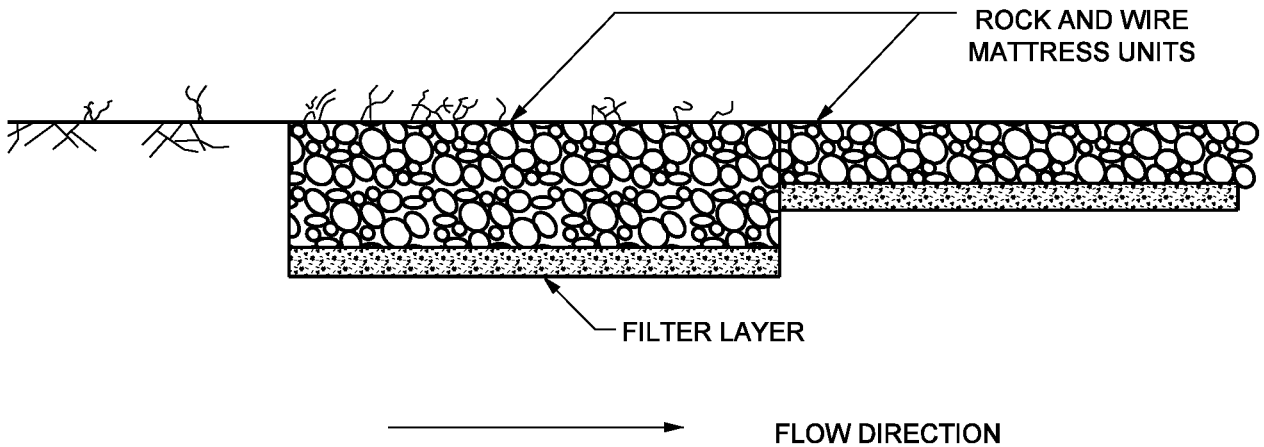

(a)

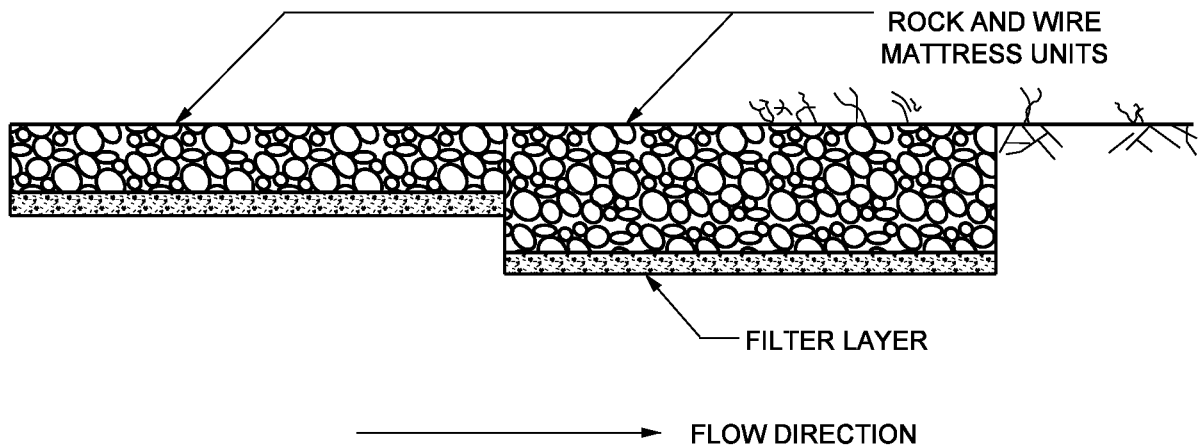

(b)

FLANK TREATMENT FOR ROCK AND WIRE MATTRESS DESIGNS
((a) Upstream Face; (b) Downstream Face)

Figure 38-6EE

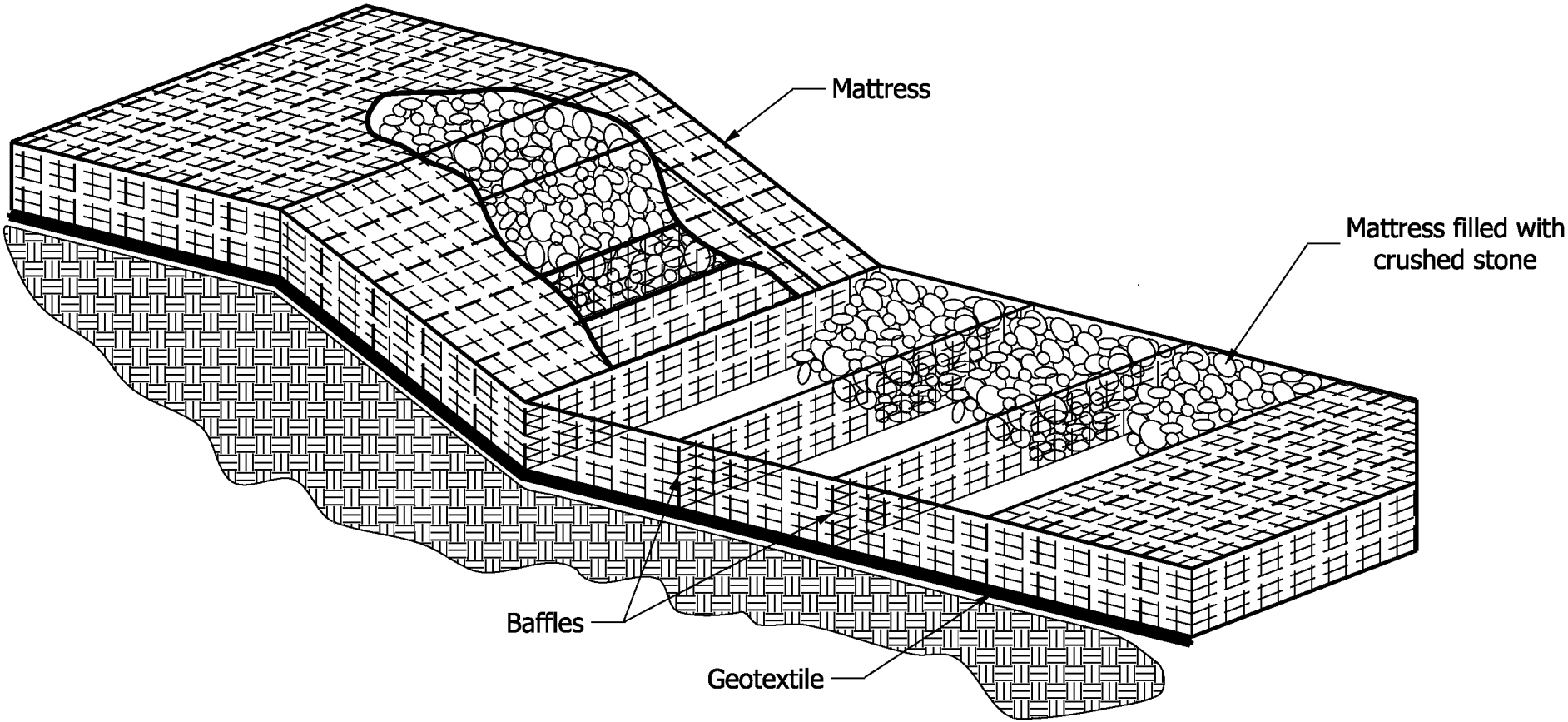

ROCK AND WIRE REVETMENT MATTRESS INSTALLATION

Figure 38-6FF

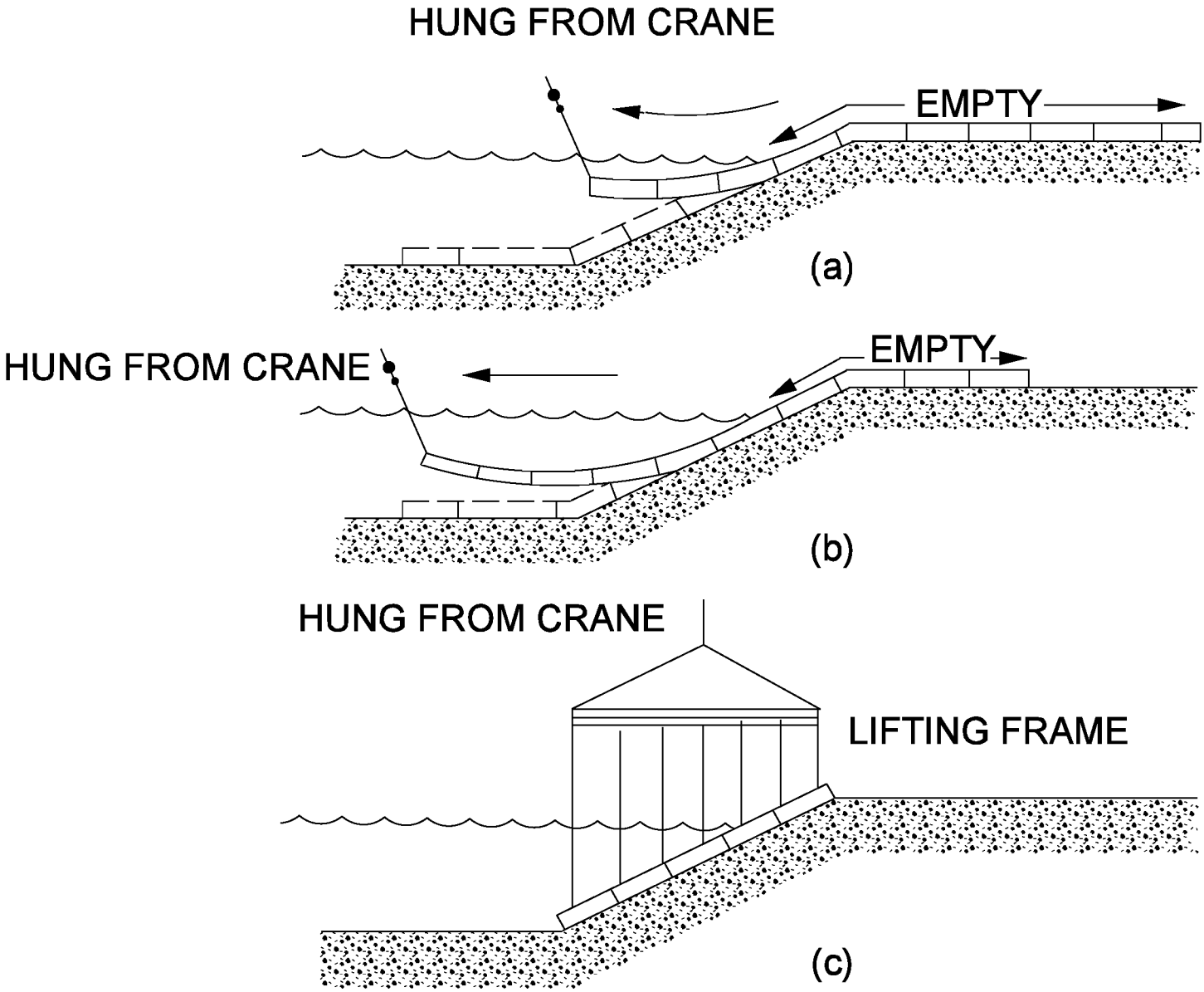

MATTRESS PLACEMENT UNDERWATER BY CRANE

Figure 38-6GG

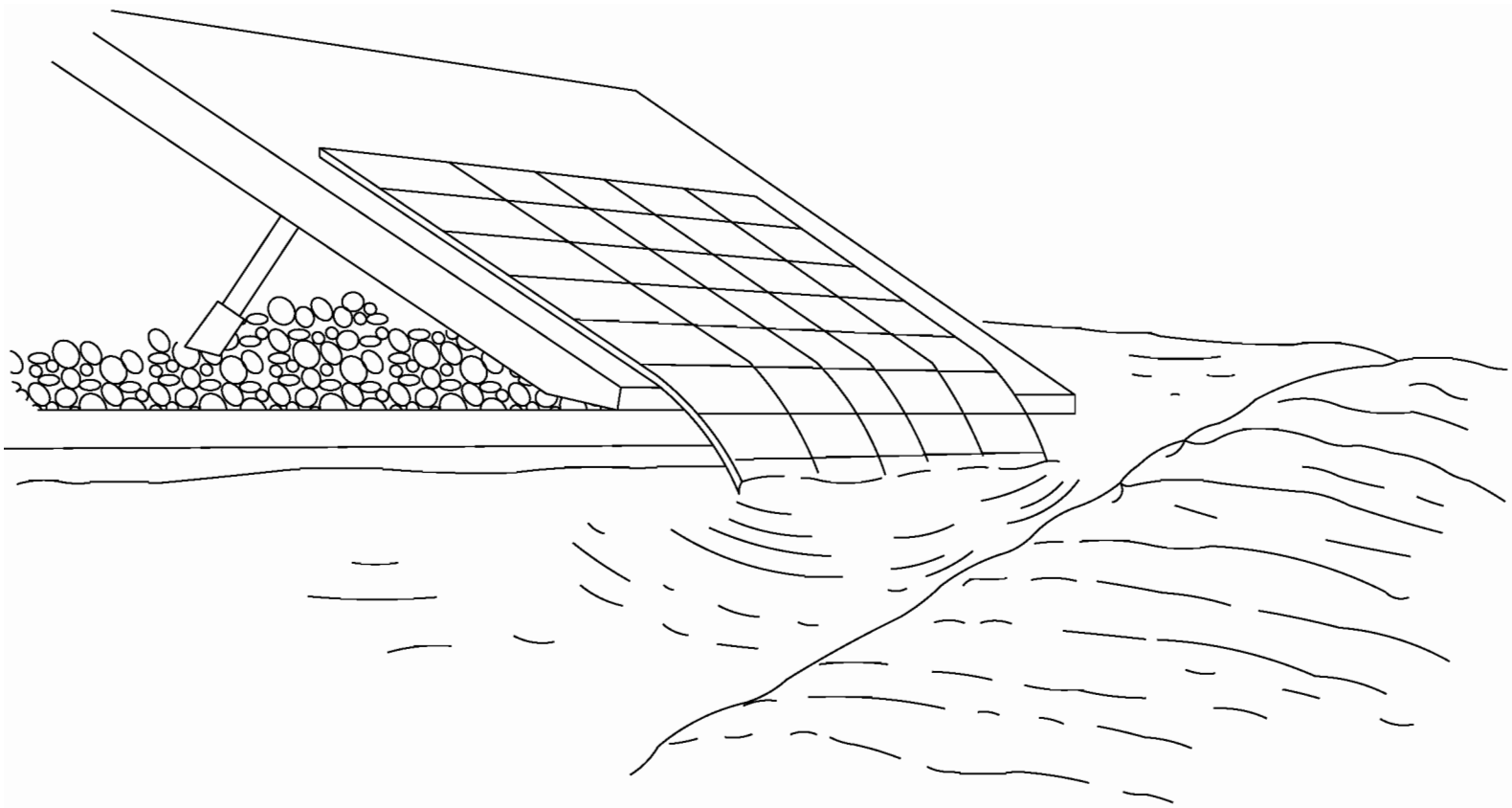

PONTOON PLACEMENT OF WIRE MATTRESS

Figure 38-6HH

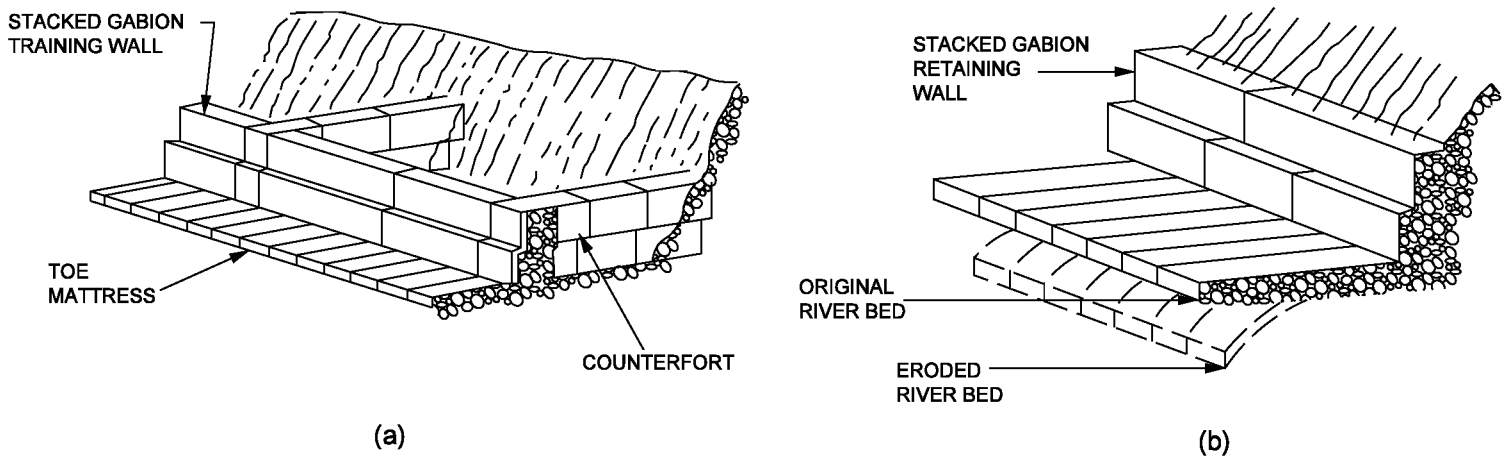

(a) training wall with counterforts; (b) stepped back low retaining wall with apron.

TYPICAL STACKED BLOCK GABION REVETMENT DETAILS

Figure 38-6II

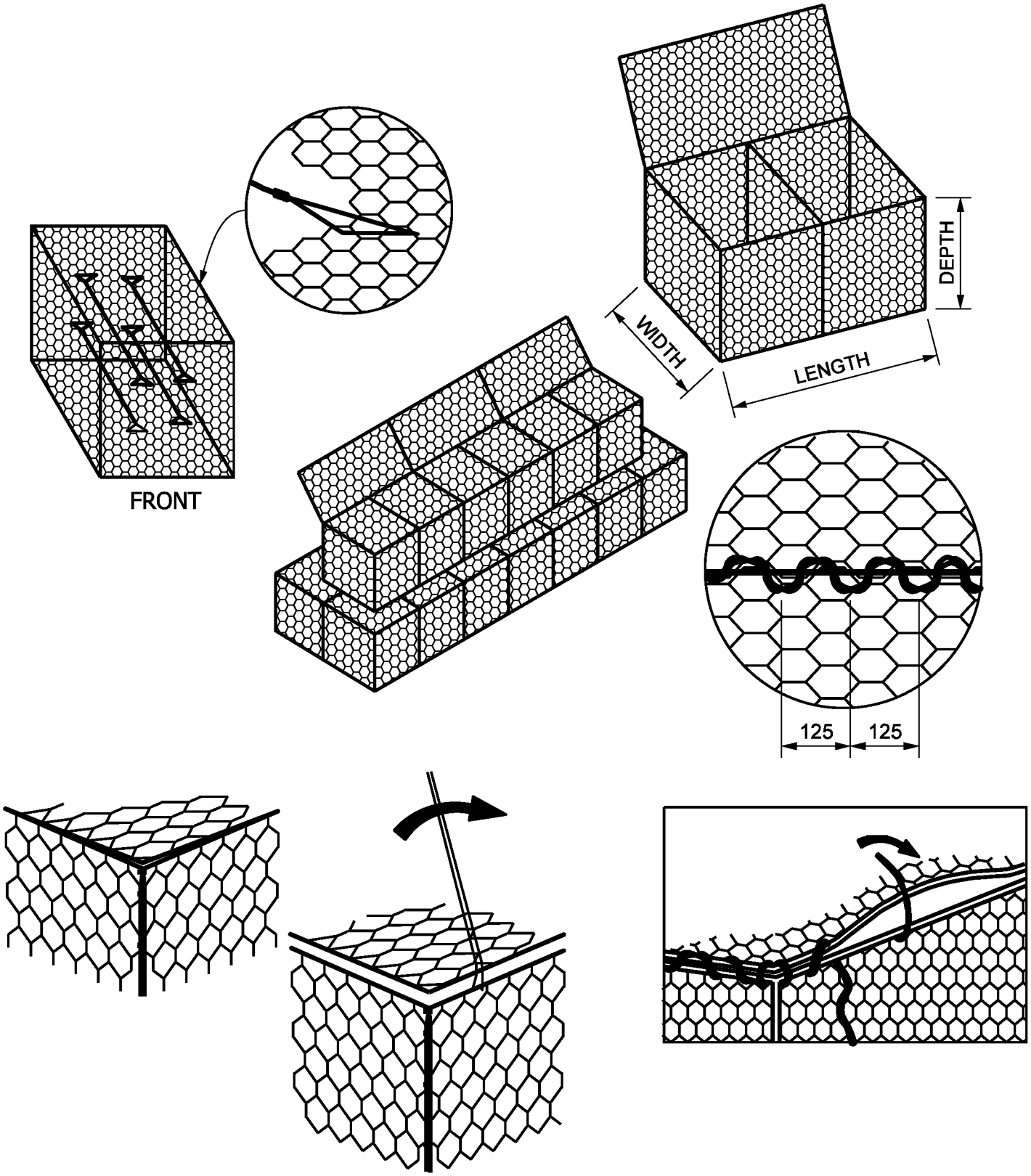

GABION BASKET FABRICATION

Figure 38-6JJ

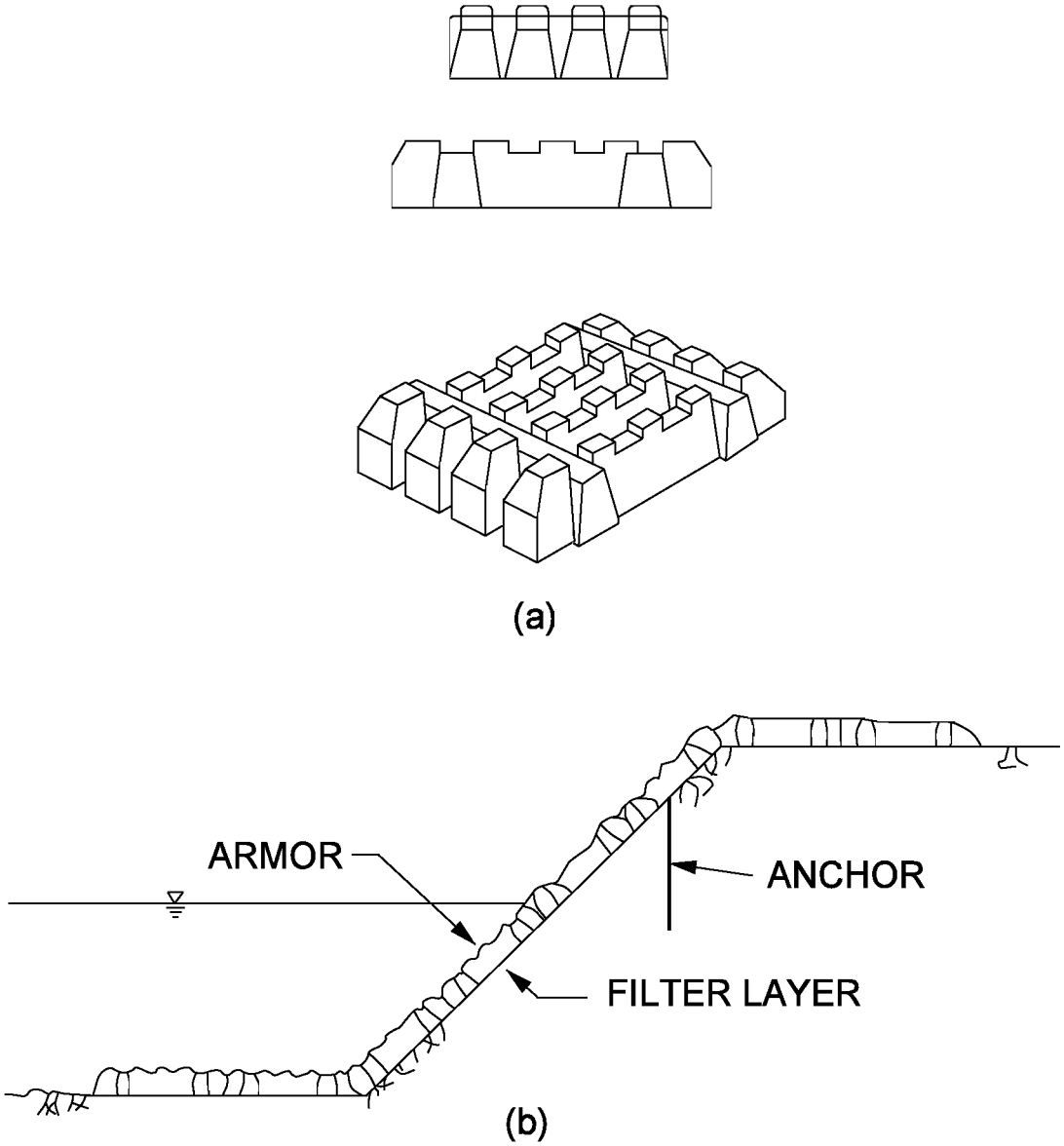

MONOSLAB REVETMENT
((a) block detail and (b) revetment detail)

Figure 38-6KK

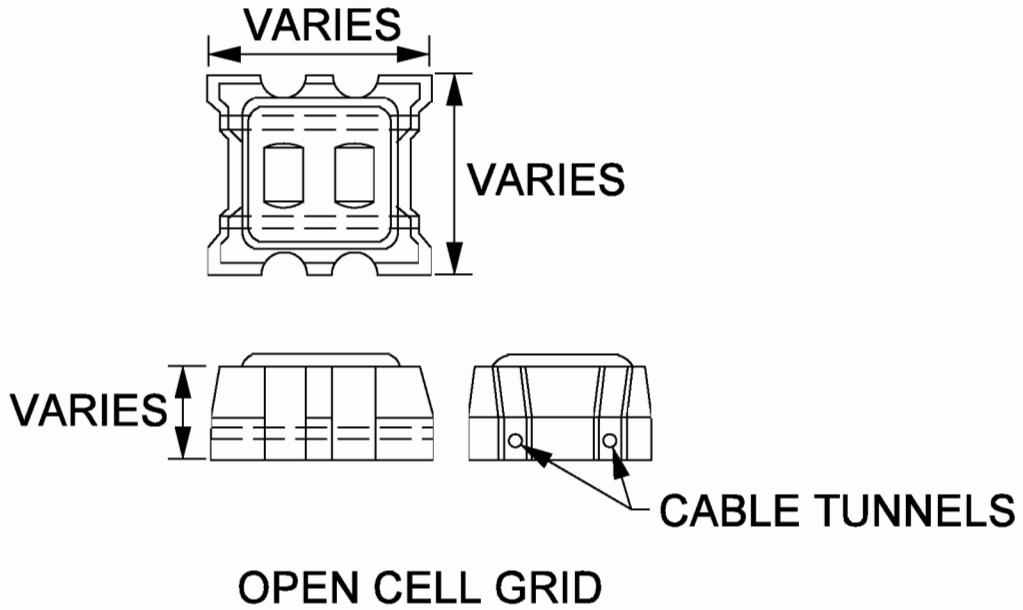

(a)

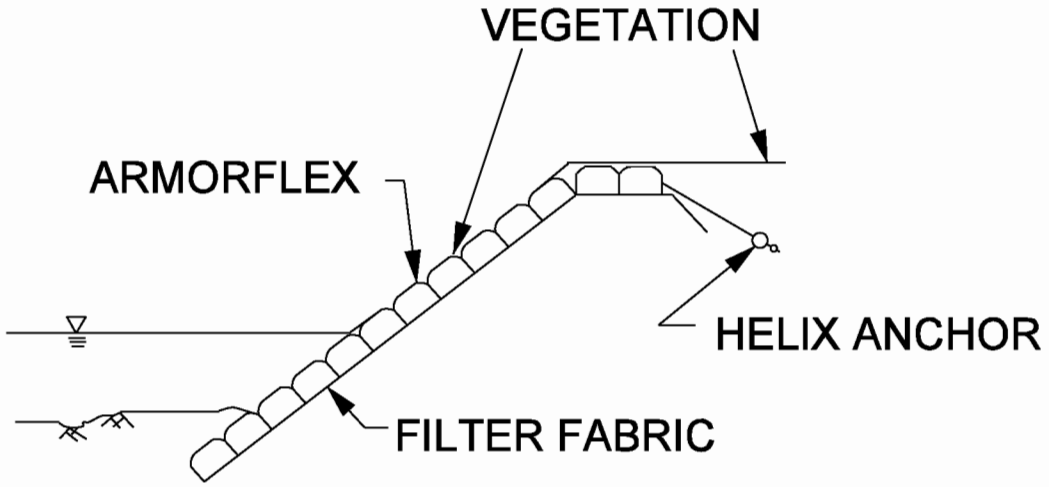

(b)

ARMORFLEX
((a) block detail and (b) revetment configuration)

Figure 38-6LL

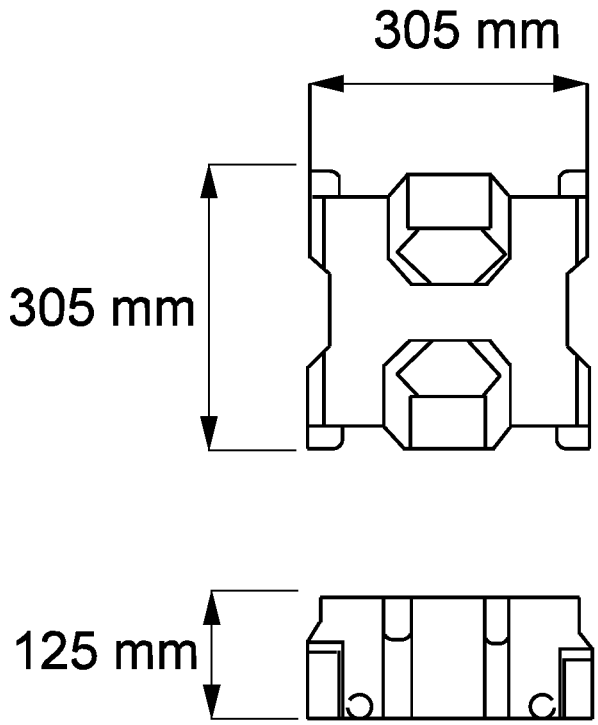

(a)

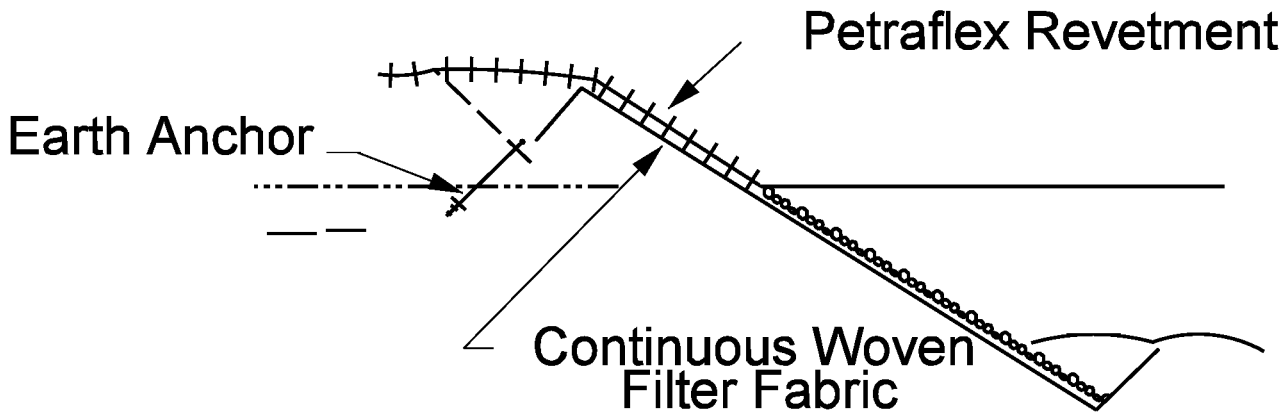

(b)

PETRAFLEX

((a)block detail and (b) revetment configuration)

Figure 38-6MM

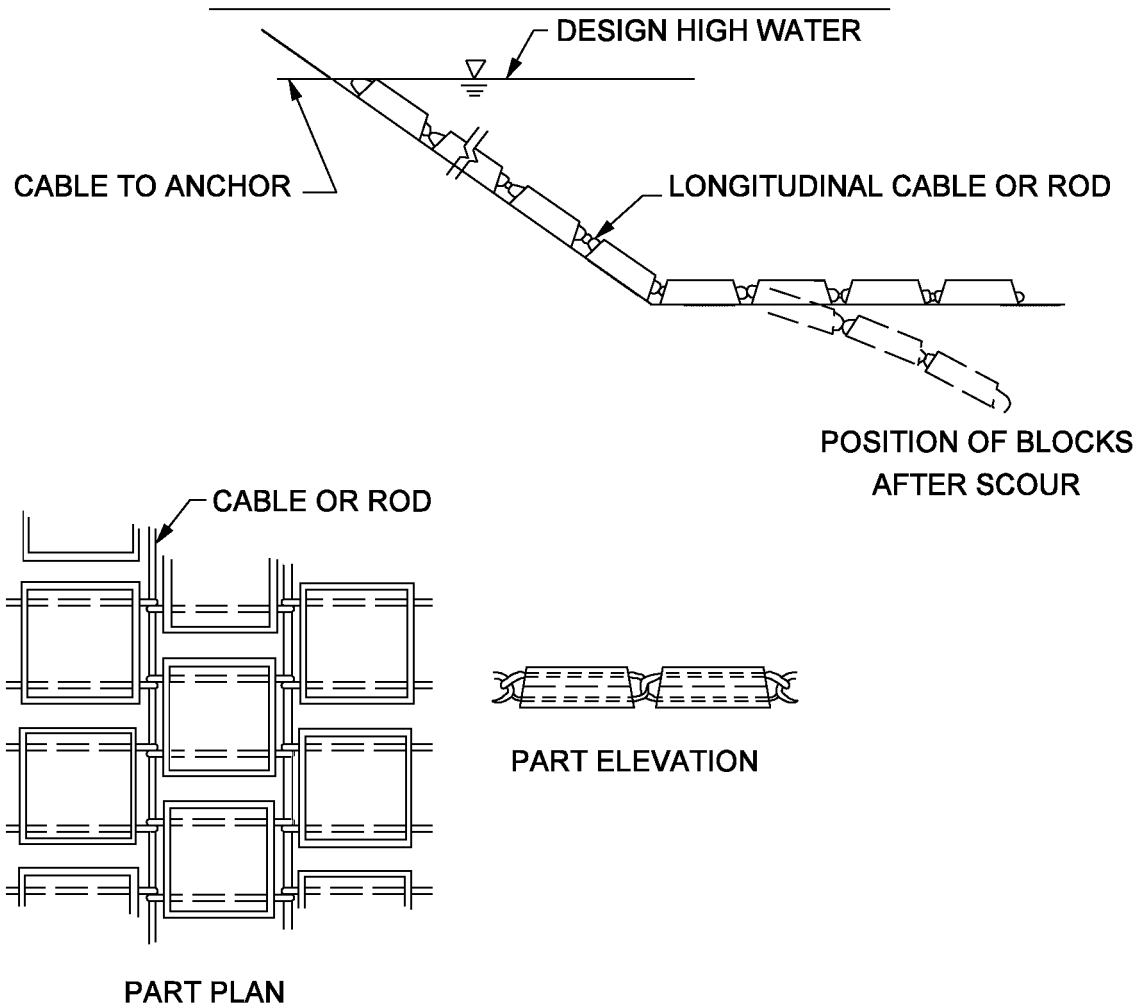

ARTICULATED CONCRETE REVETMENT

Figure 38-6NN

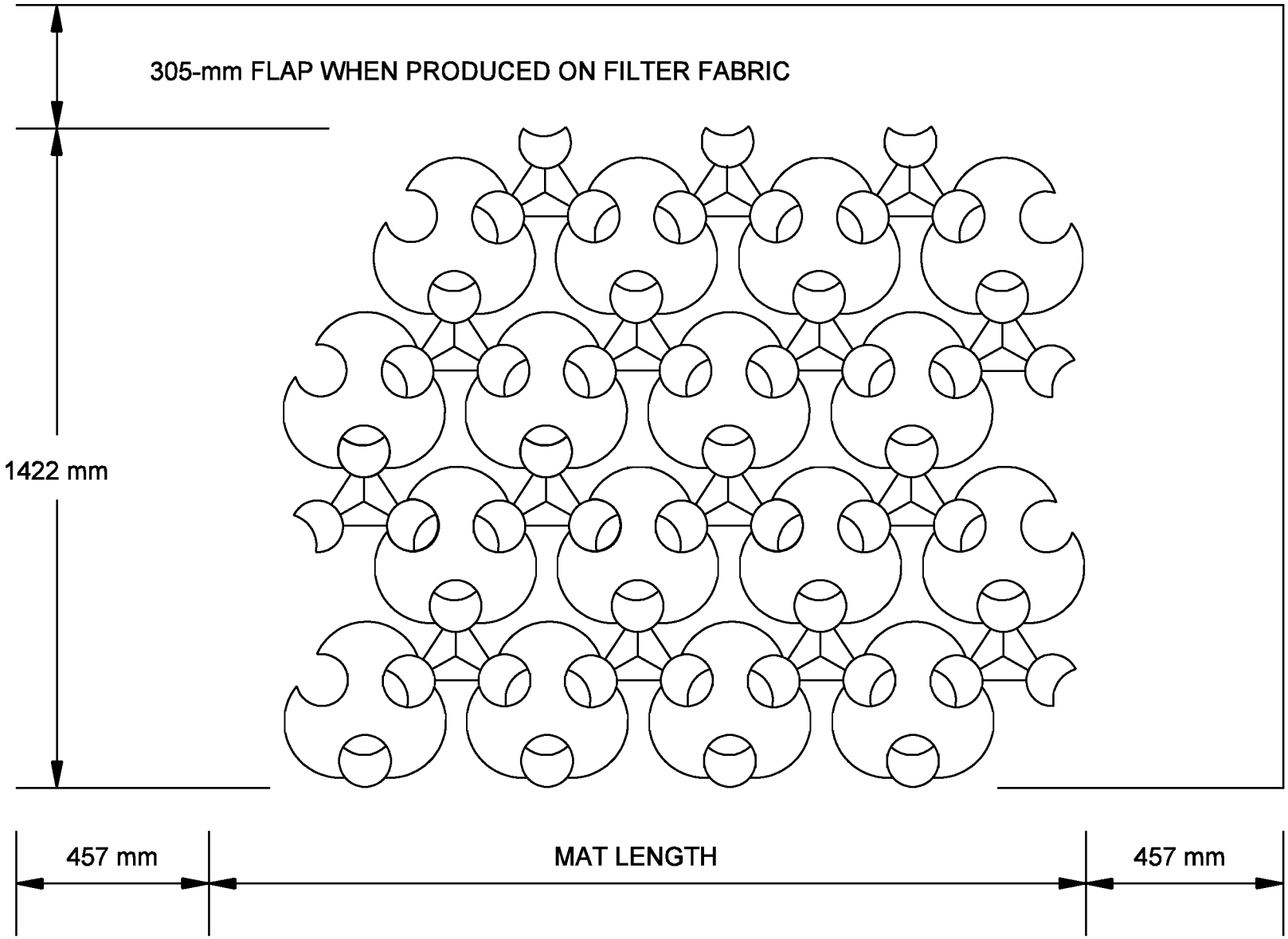

TRI-LOCK REVETMENT

Figure 38-6OO

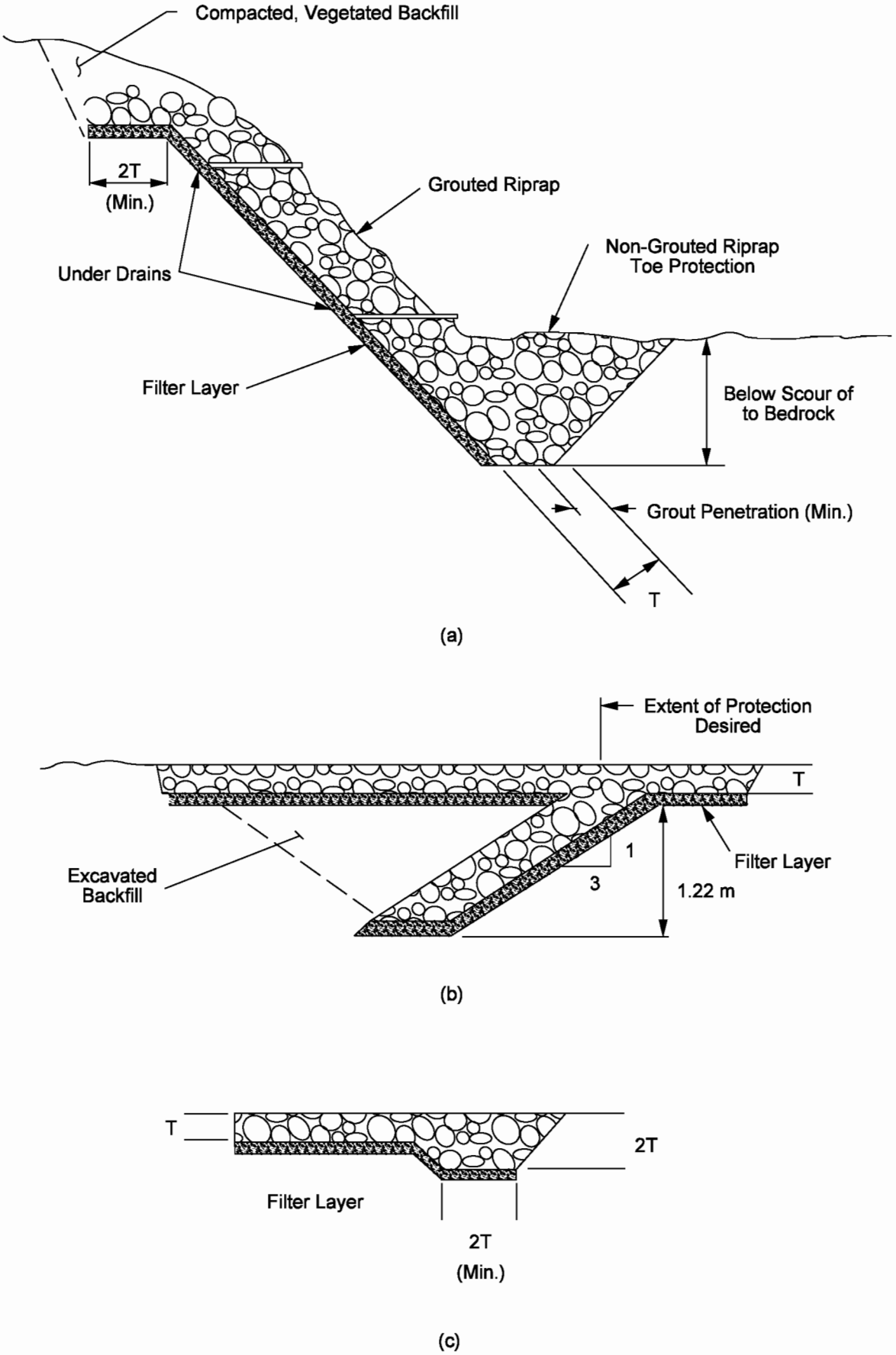

GROUTED RIPRAP SECTIONS
((a) Section A-A; (b) Section B-B; and (c) Section C-C)

Figure 38-6PP

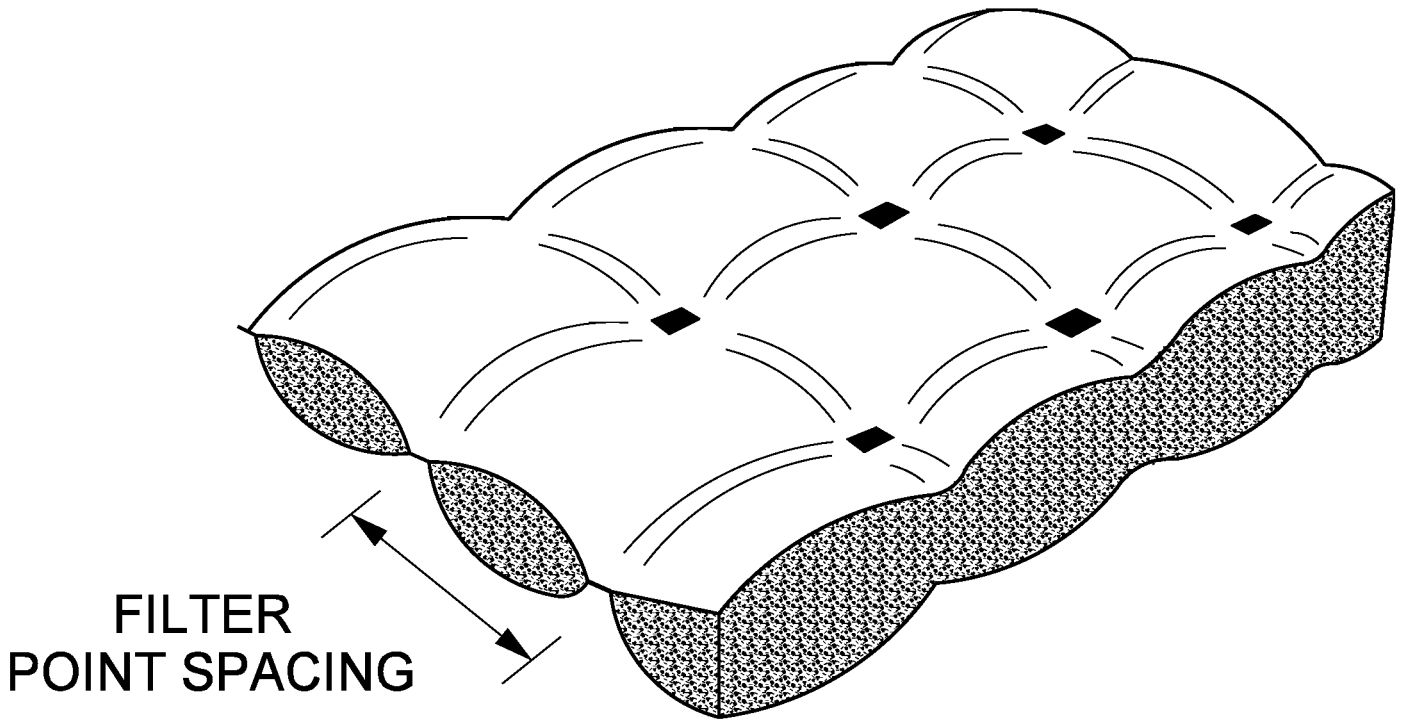

GROUTED FABRIC-FORMAED REVETMENT
(Type 1)

Figure 38-6QQ

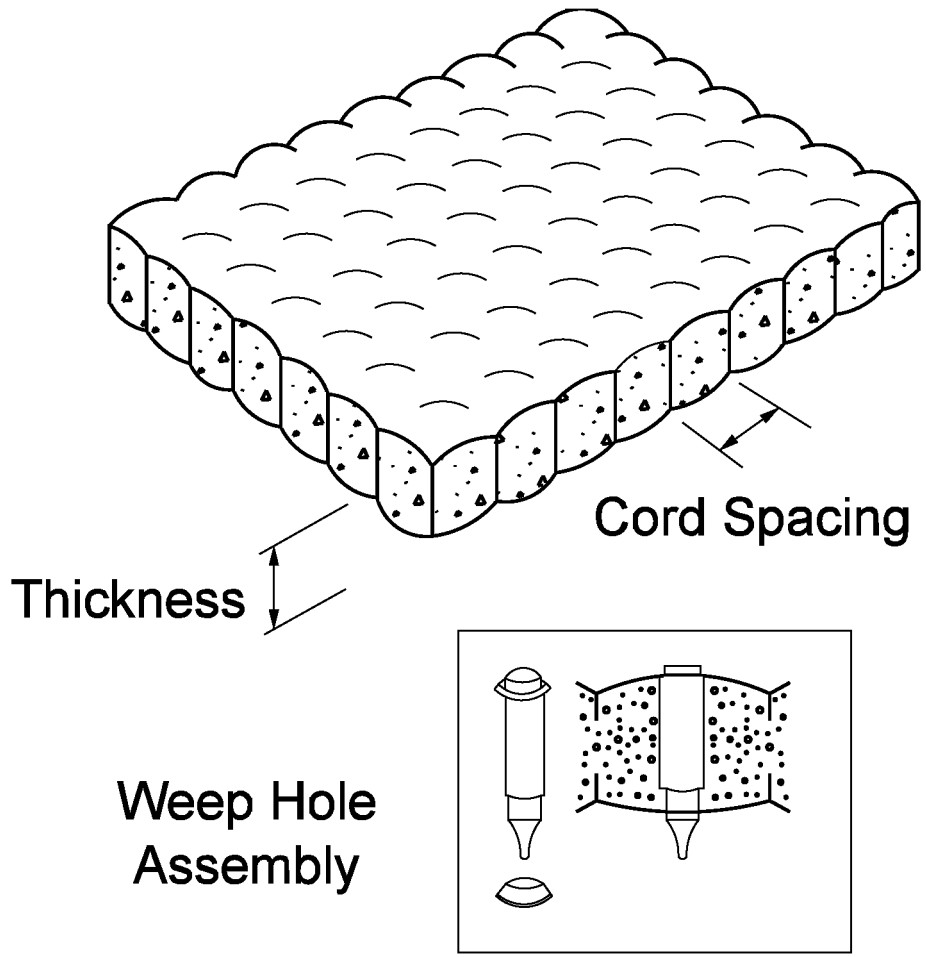

GROUTED FABRIC-FORMED REVETMENT
(Type 2)

Figure 38-6RR

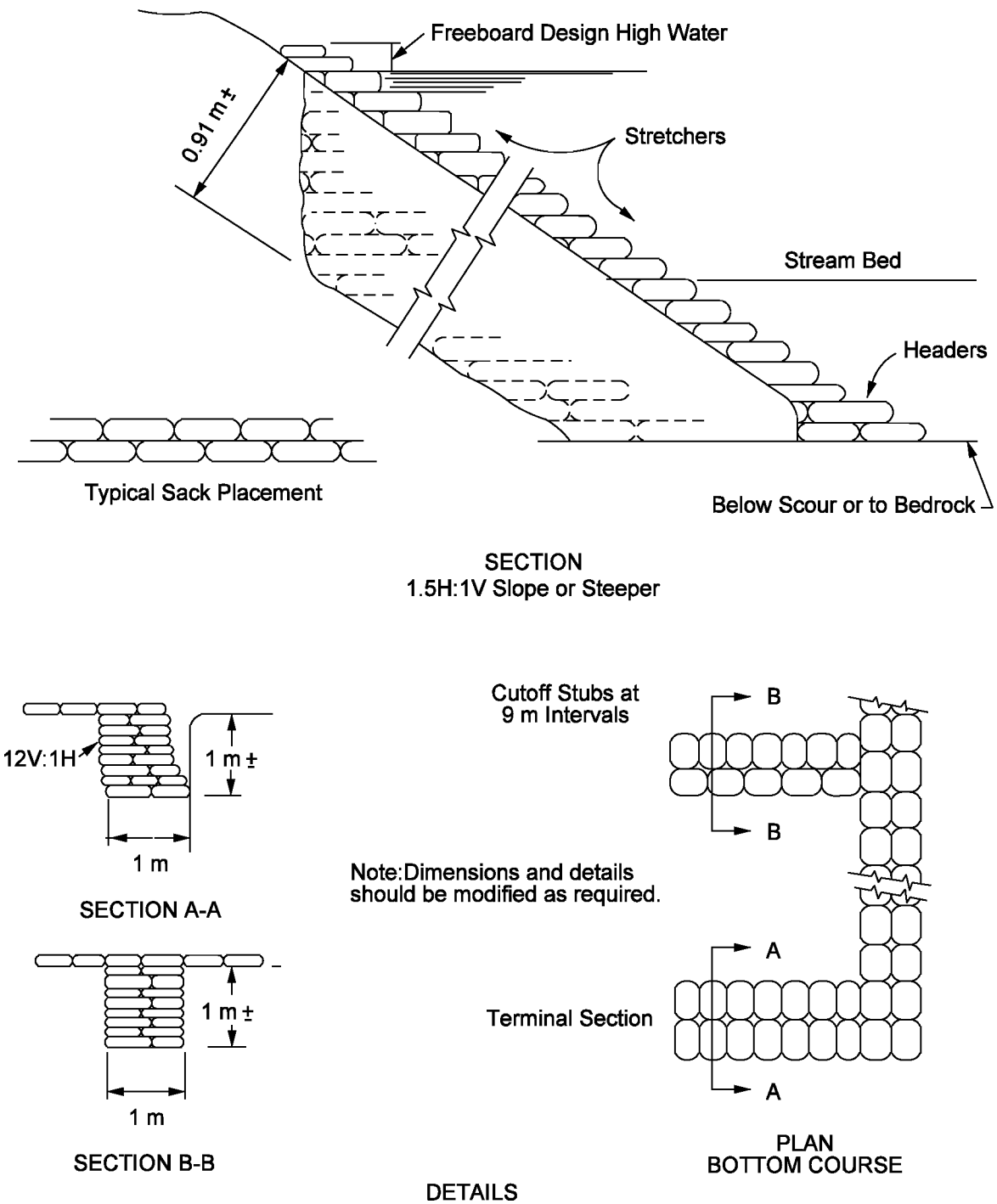

TYPICAL SECTION AND DETAILS OF SACKED CONCRETE SLOPE PROTECTION

Figure 38-6SS

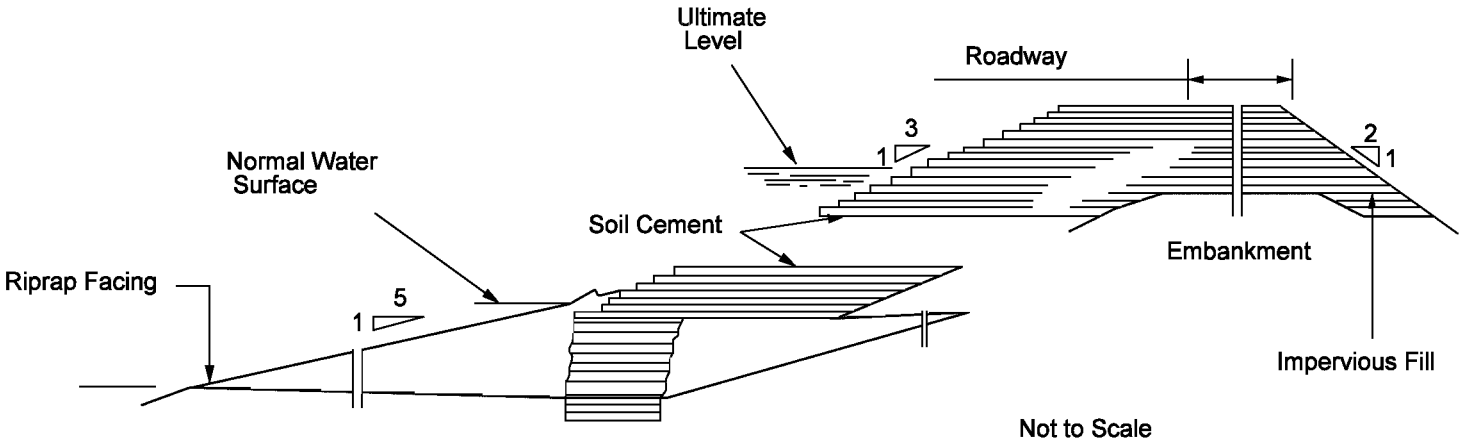

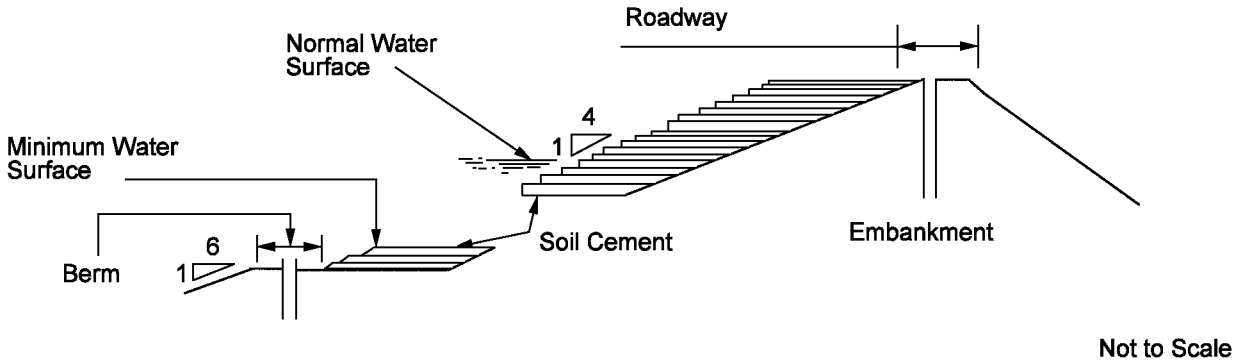

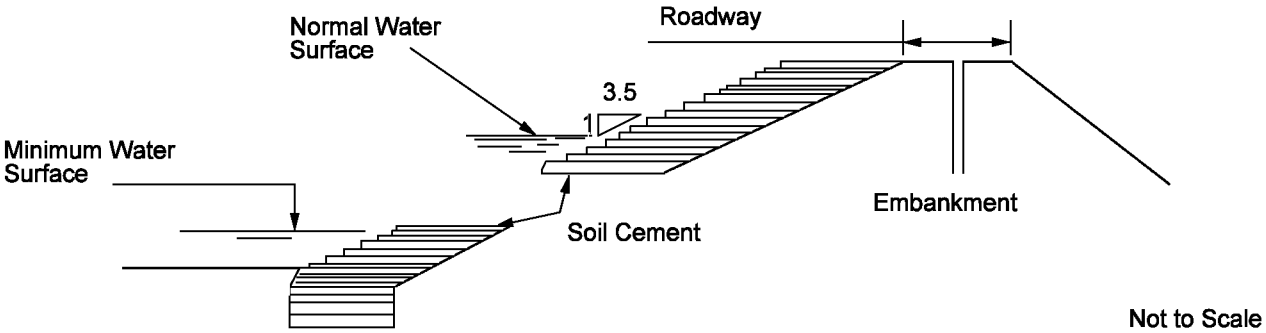

DETAILS AND DIMENSIONS OF THREE SOIL-CEMENT FACINGS
DESIGN GUIDELINES

Figure 38-6TT