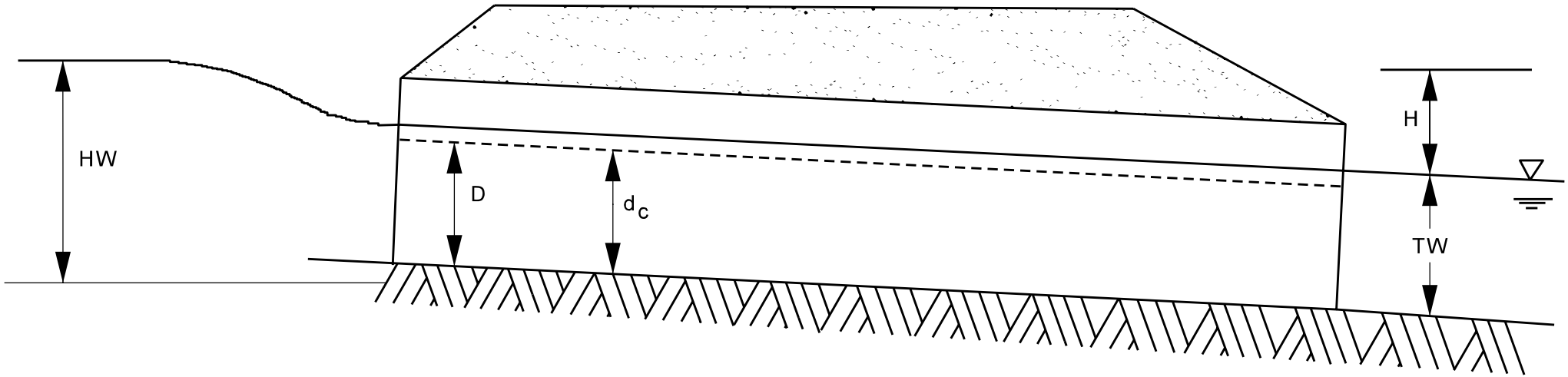

FLOW TYPE III, TW > d_c

Figure 31-5H