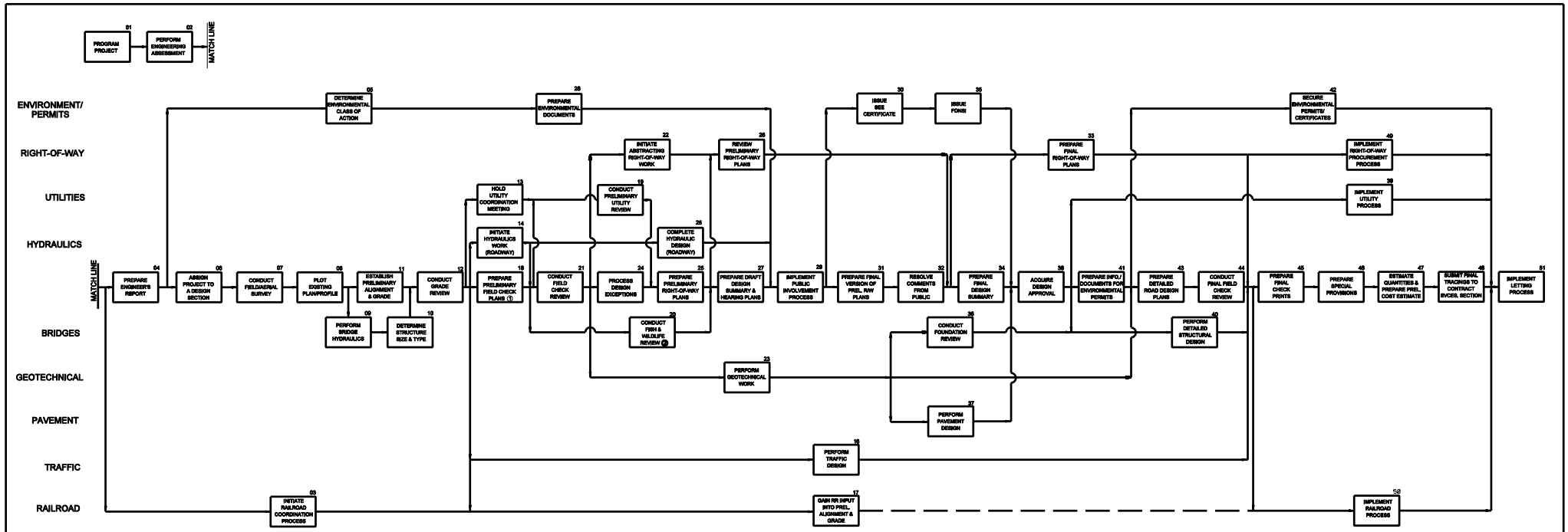

(1) ALSO INCLUDES PREPARATION OF PRELIMINARY DRAFT DESIGN SUMMARY.
(2) ALSO REQUIRED FOR ROAD PROJECTS WITH WETLANDS OR BLUE LINE STREAMS ON U.S.G.S. QUADRANGLE MAP.

PROJECT DEVELOPMENT PROCESS
(HIGHWAY DESIGN PROJECT)
FIGURE 2A

INDIANA DEPARTMENT OF TRANSPORTATION

JULY 1999