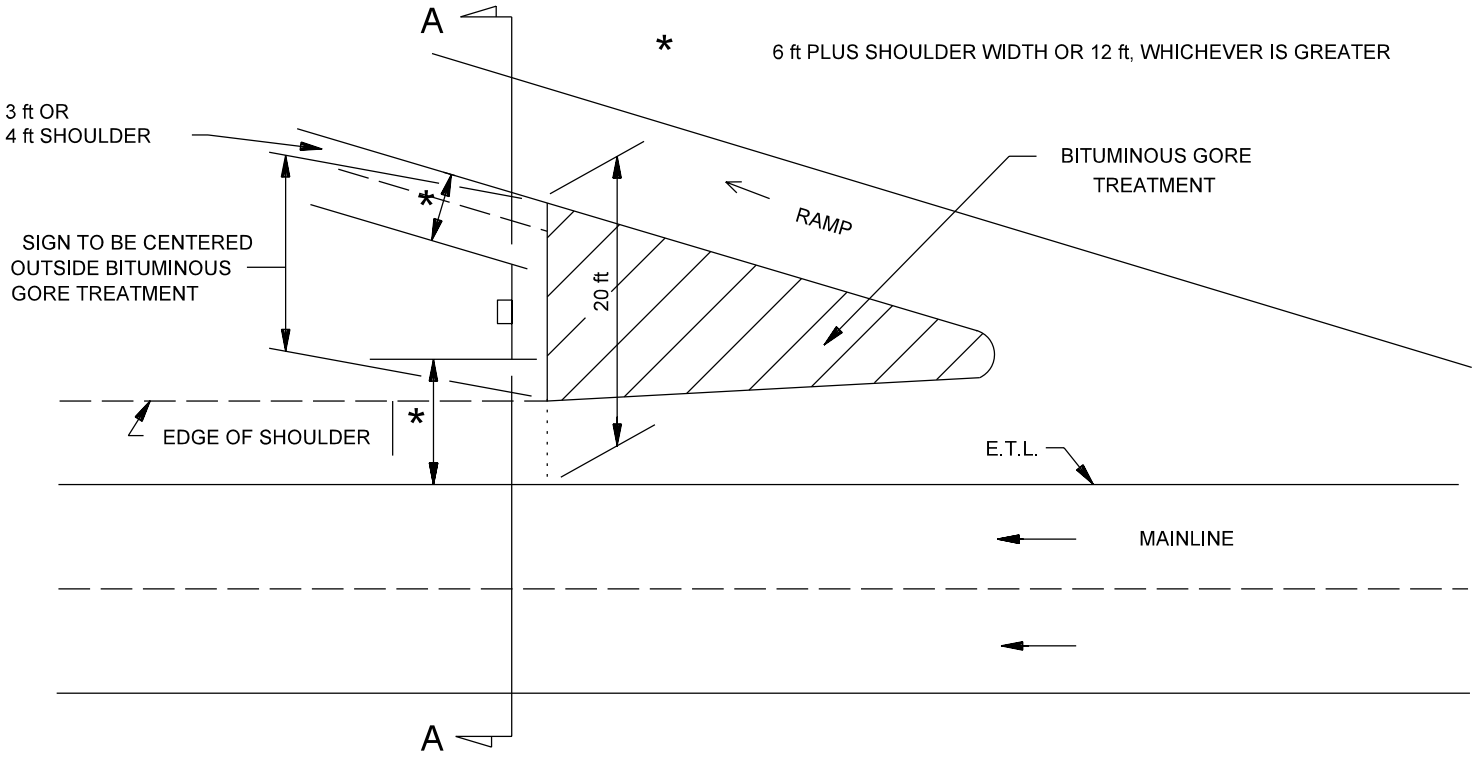

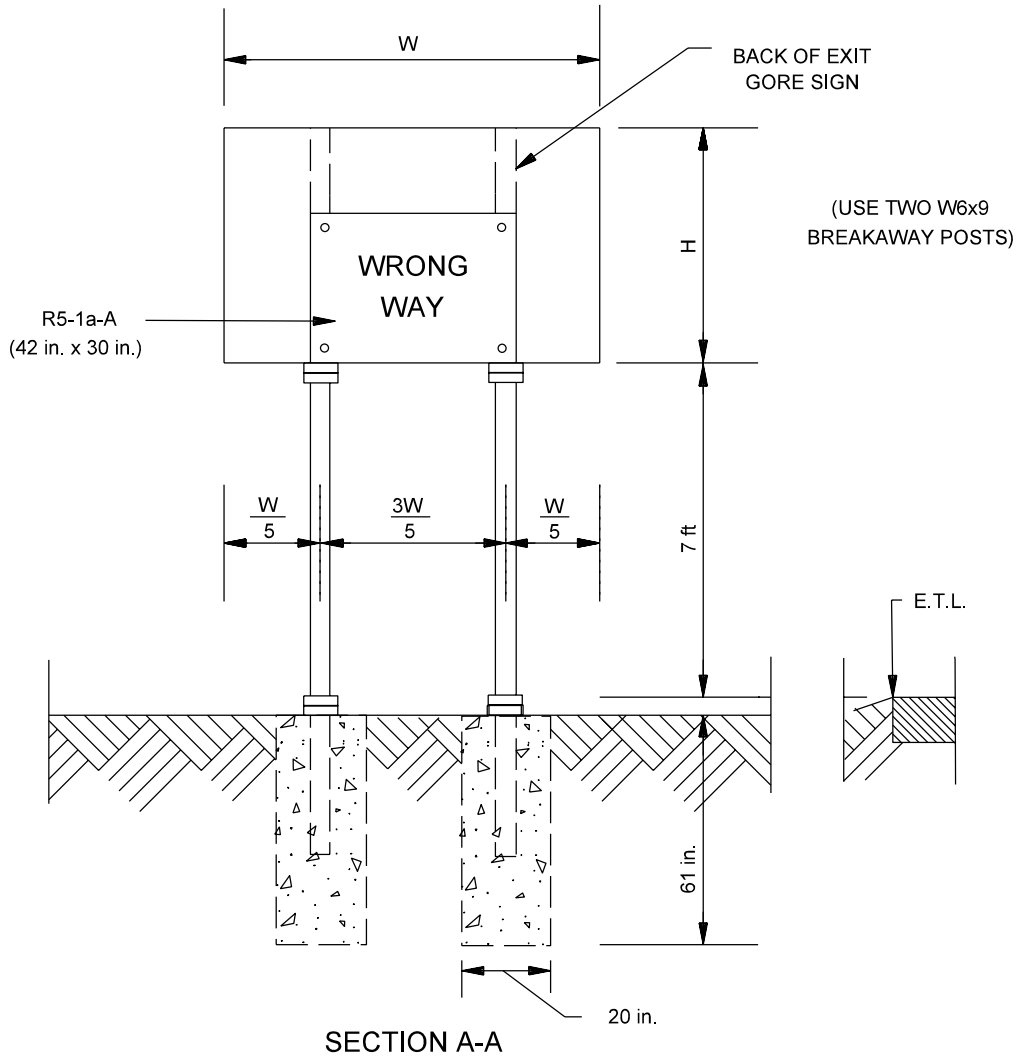

SECTION A-A

SIGN GORE TREATMENT

Figure 75-2C