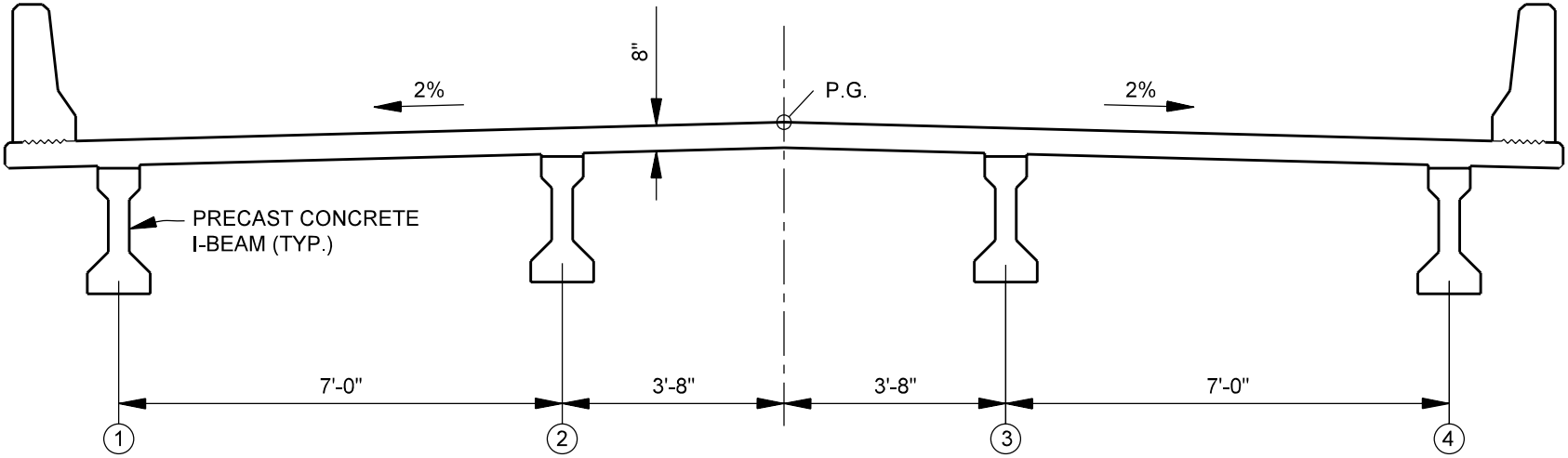

BEARING PAD THICKNESS = 3"

BEAM DEPTH = 3'-0"

BEAM TOP FLANGE WIDTH = 1'-0"

RESIDUAL CAMBER/VERTICAL CURVE CORRECTION = 1/2"

DETERMINE CONTROL DIMENSION "Y": (SEE SECTION 61-4.02(03))
"Y" = 8" + 0.75" + (0.02)(1'-0")(0.5) = 8.87"

SEE FIGURE 67-5C FOR FINAL BRIDGE SEAT ELEVATIONS.

TYPICAL BRIDGE SECTION
(Concrete I-beam Example)

Figure 67-5A