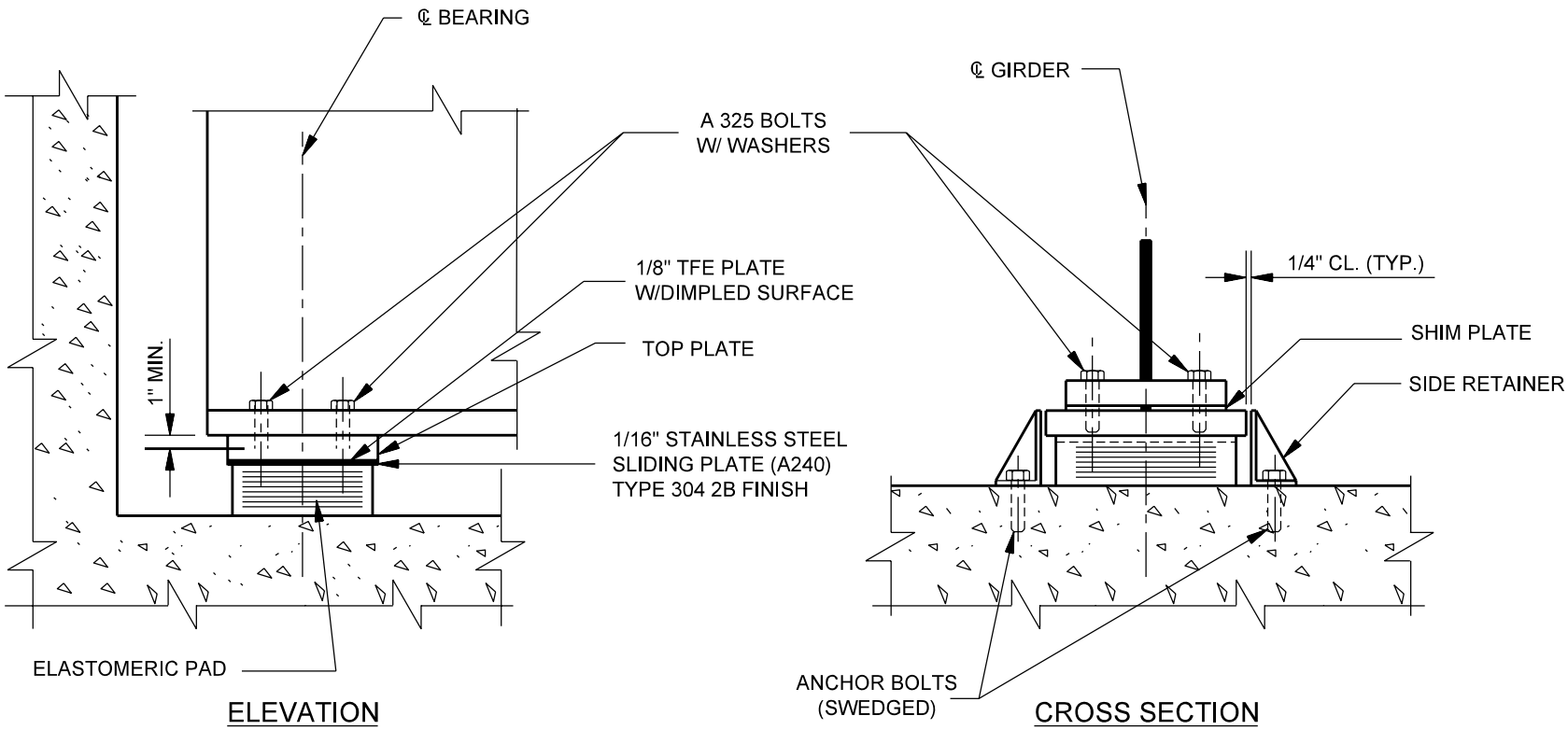

PTFE ELASTOMERIC BEARING ASSEMBLY

Figure 67-4L