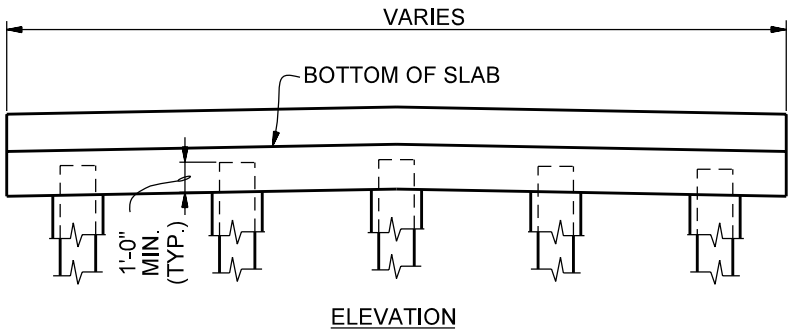

ELEVATION

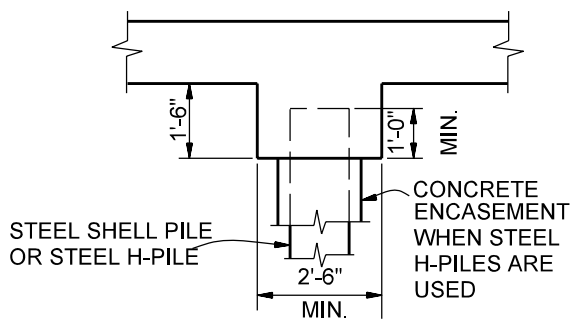

SECTION

INTEGRAL

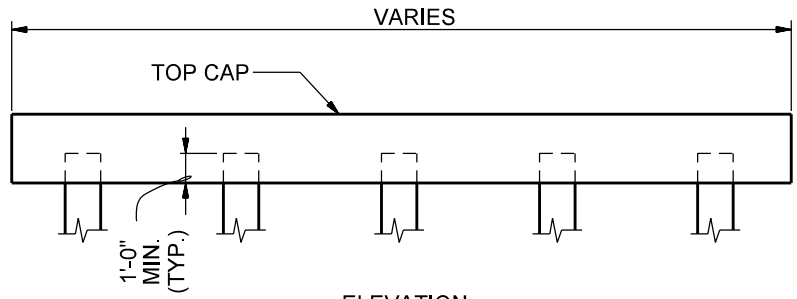

ELEVATION

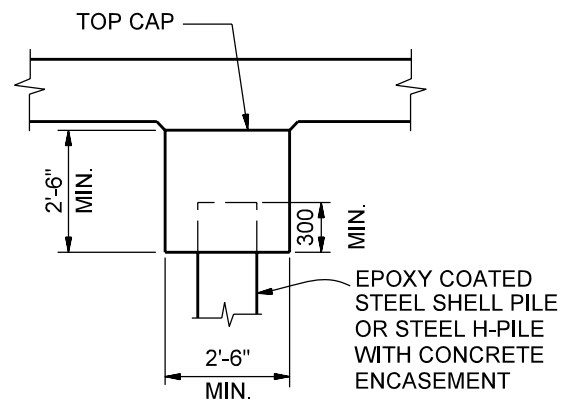

SECTION

NON-INTEGRAL

EXTENDED PILE BENT

Figure 67-3A