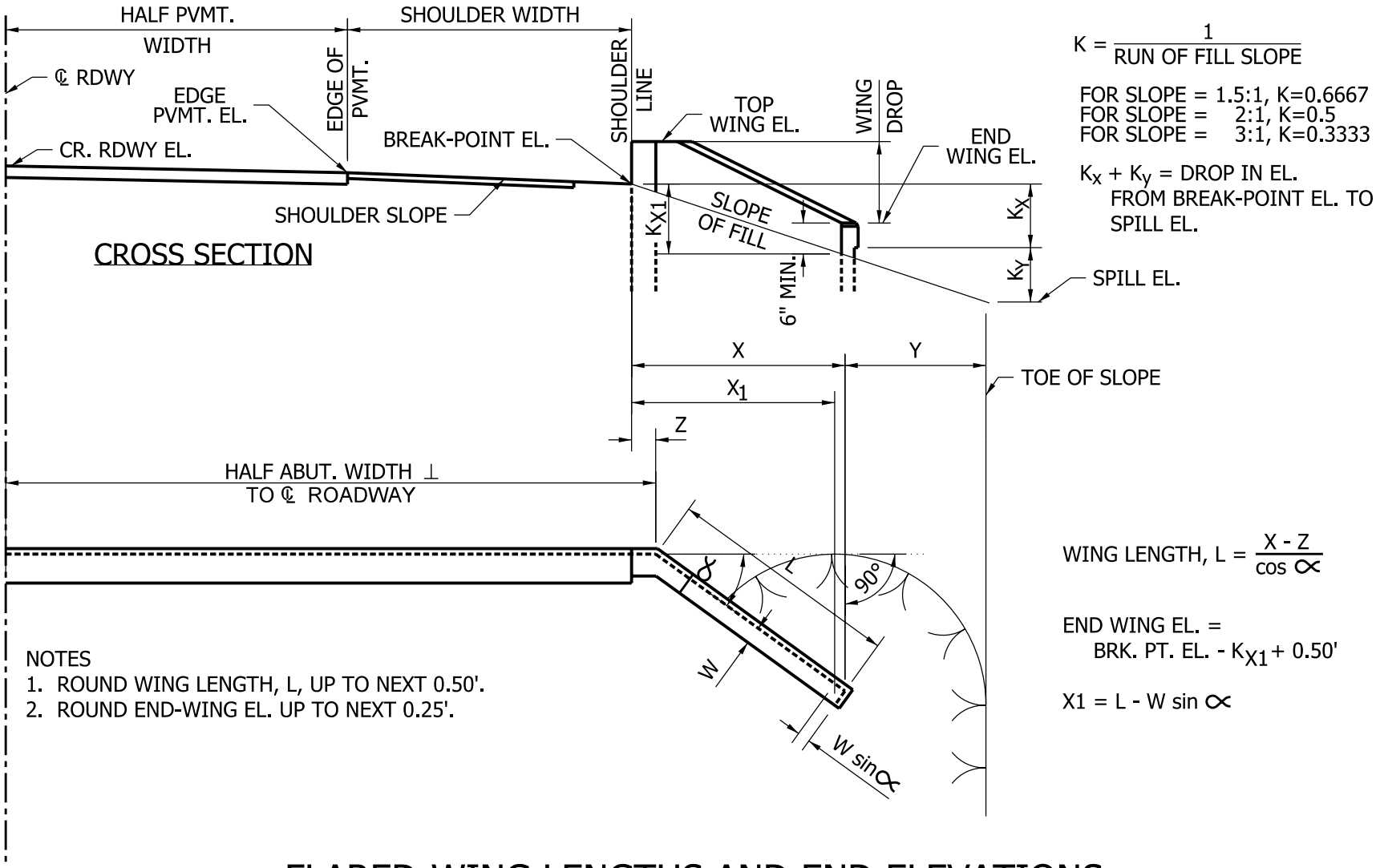

NOTES
1. ROUND WING LENGTH, L, UP TO NEXT 0.50'.
2. ROUND END-WING EL. UP TO NEXT 0.25'.

FLARED-WING LENGTHS AND END ELEVATIONS, SQUARE STRUCTURE

Figure 67-2A (1)

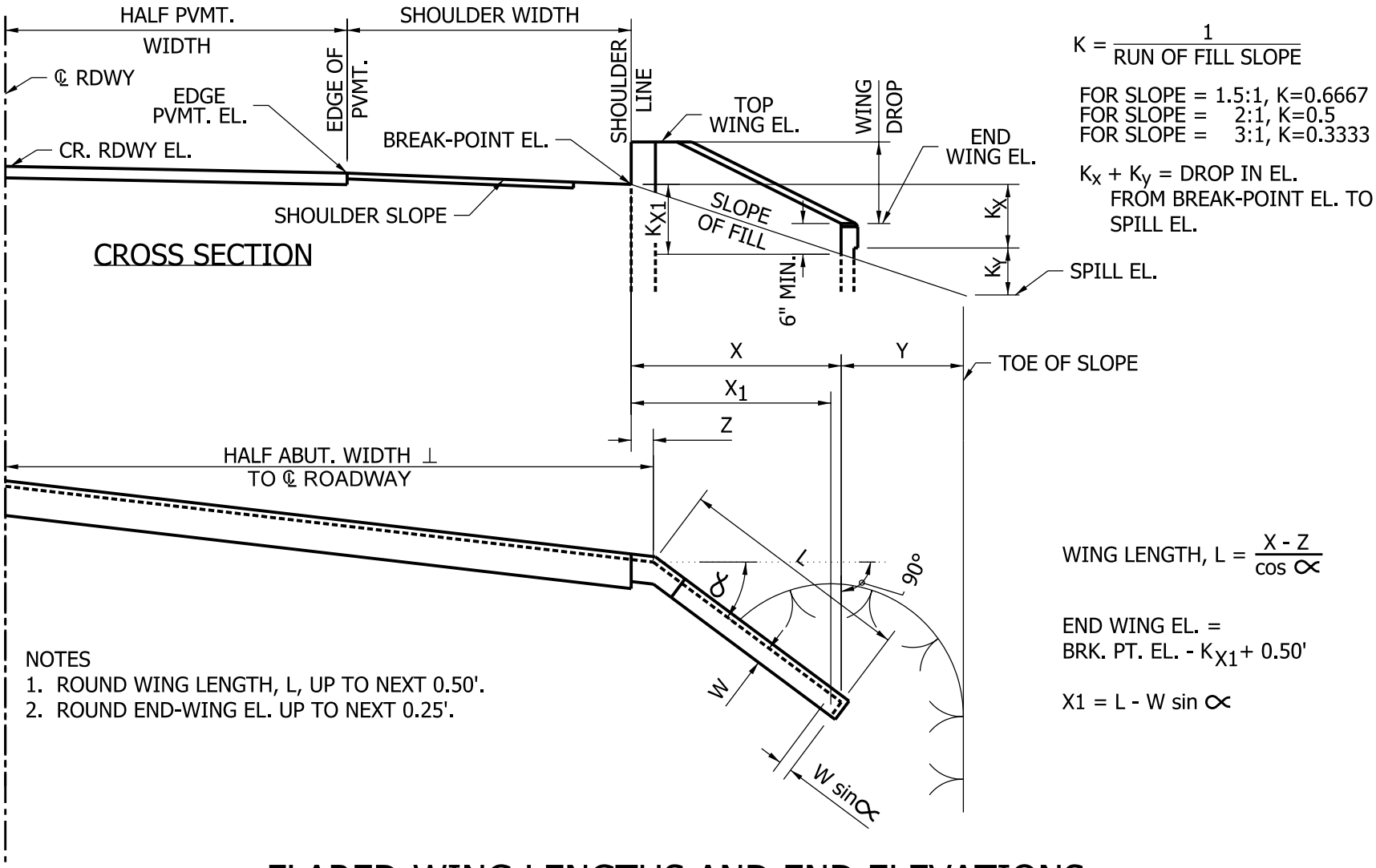

$$K = \frac{1}{\text{RUN OF FILL SLOPE}}$$

FOR SLOPE = 1.5:1, K=0.6667
FOR SLOPE = 2:1, K=0.5
FOR SLOPE = 3:1, K=0.3333

$K_X + K_Y$ = DROP IN EL. FROM BREAK-POINT EL. TO SPILL EL.

$$\text{WING LENGTH, } L = \frac{X - Z}{\cos \propto}$$

END WING EL. = BRK. PT. EL. - K_{X1} + 0.50'

$X1 = L - W \sin \propto$

FLARED-WING LENGTHS AND END ELEVATIONS, STRUCTURE SKEWED TO RIGHT

Figure 67-2A (2)

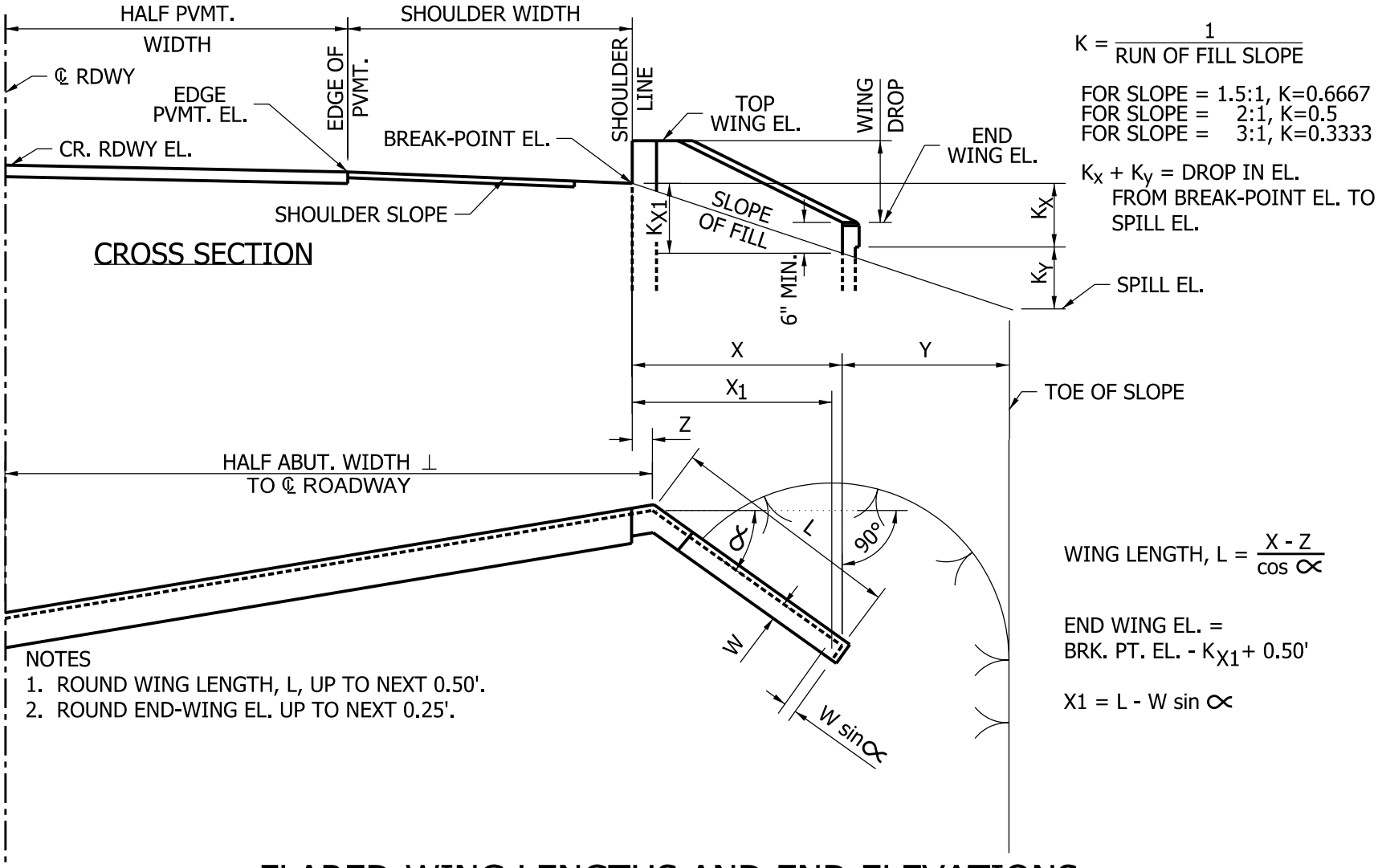

FLARED-WING LENGTHS AND END ELEVATIONS, STRUCTURE SKEWED TO LEFT

Figure 67-2A (3)