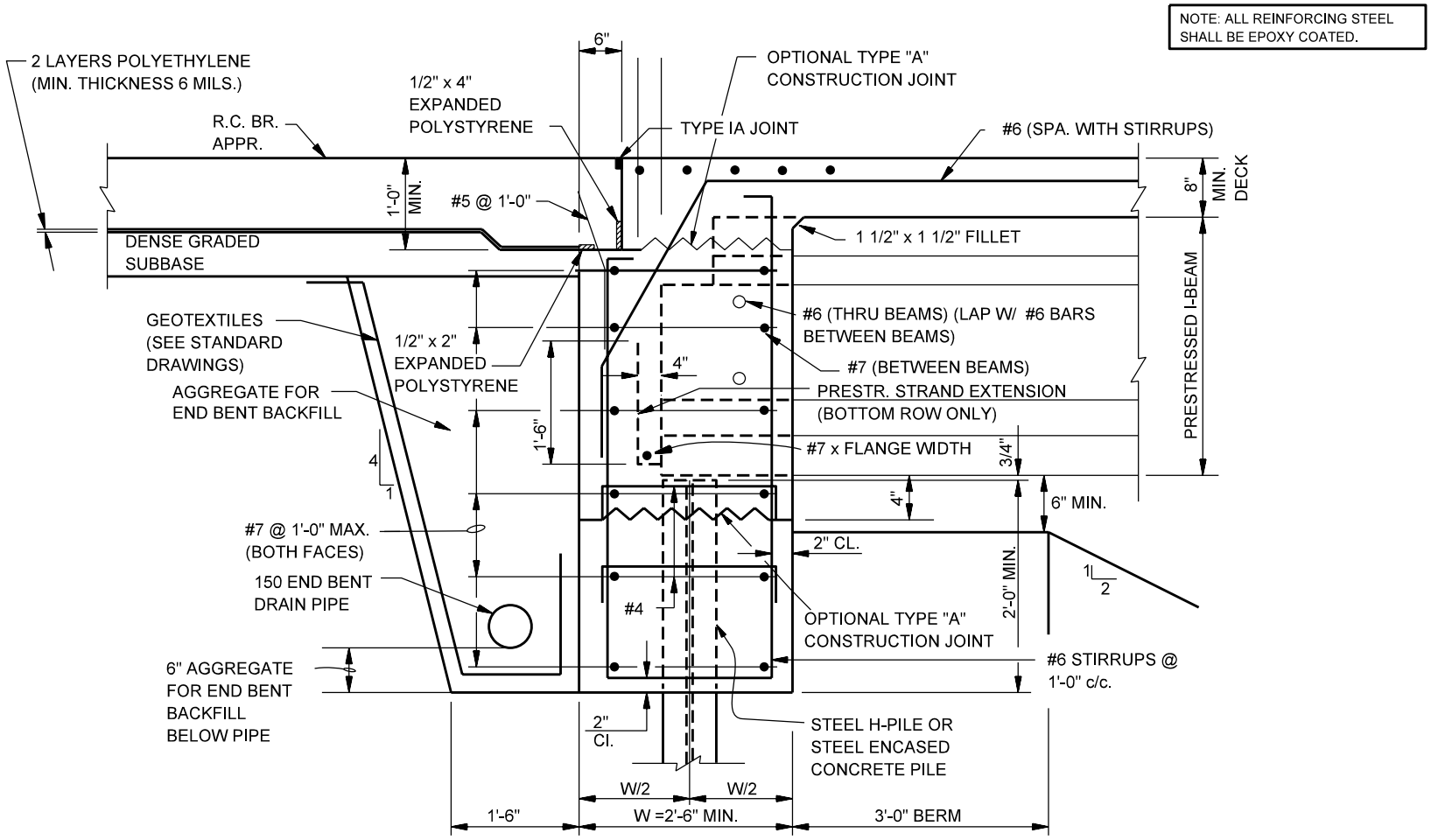

PRESTRESSED CONCRETE I-BEAM

SUGGESTED INTEGRAL END BENT DETAILS
(Beams Attached Directly to Piling, Method A)

Figure 67-1B
(Page 1 of 4)

REINFORCING DETAILS, BACKFILL BEHIND END BENT AND SIMILAR DETAILS ARE AS SHOWN ON THE PRESTRESSED CONCRETE I-BEAM SECTION UNLESS OTHERWISE NOTED.

NOTE: ALL REINFORCING STEEL SHALL BE EPOXY COATED.

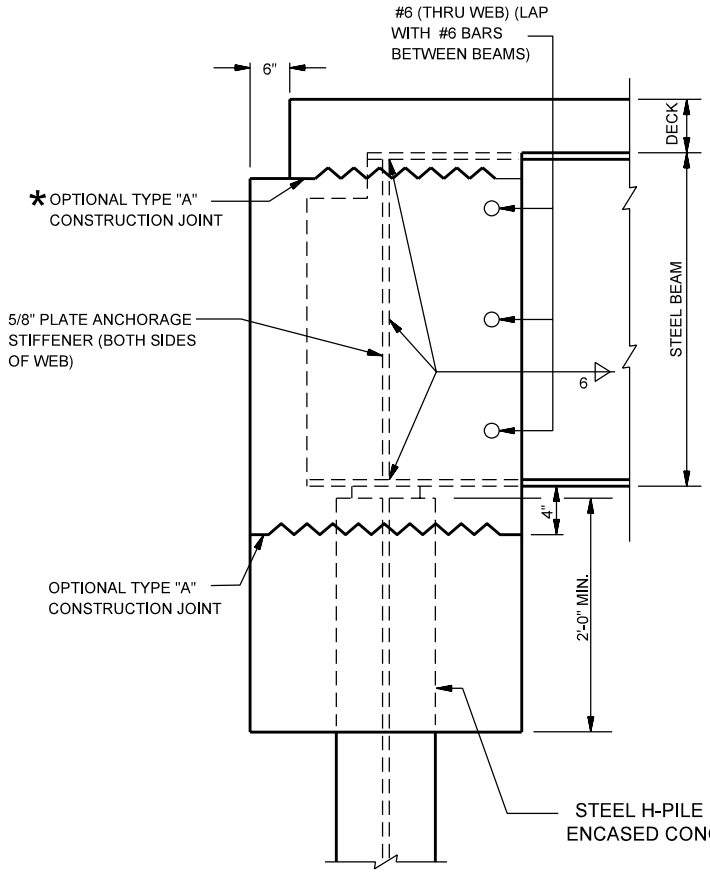

STEEL BEAM OR GIRDER

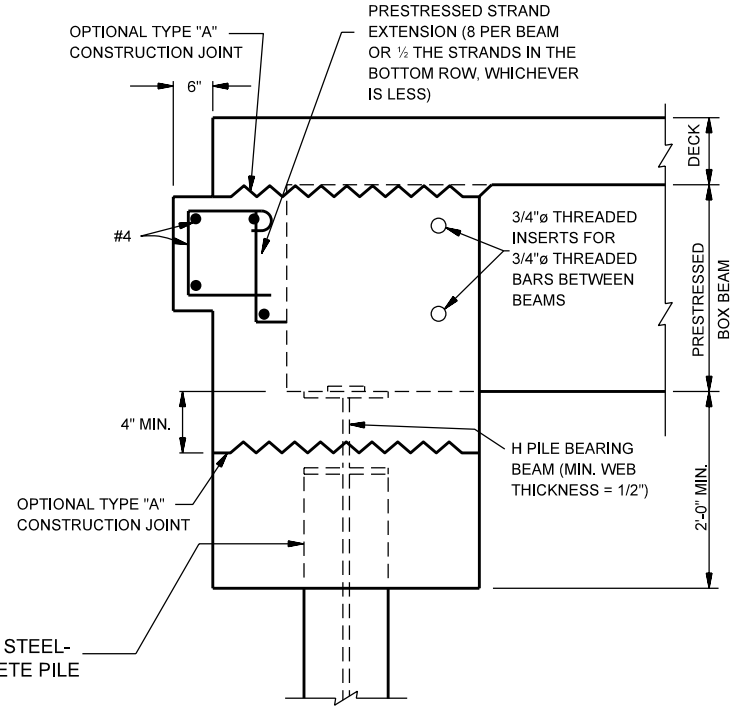

PRESTRESSED CONCRETE BOX BEAM

SUGGESTED INTEGRAL END BENT DETAILS
(Beams Attached Directly to Piling, Method A)

Figure 67-1B
(Page 2 of 4)

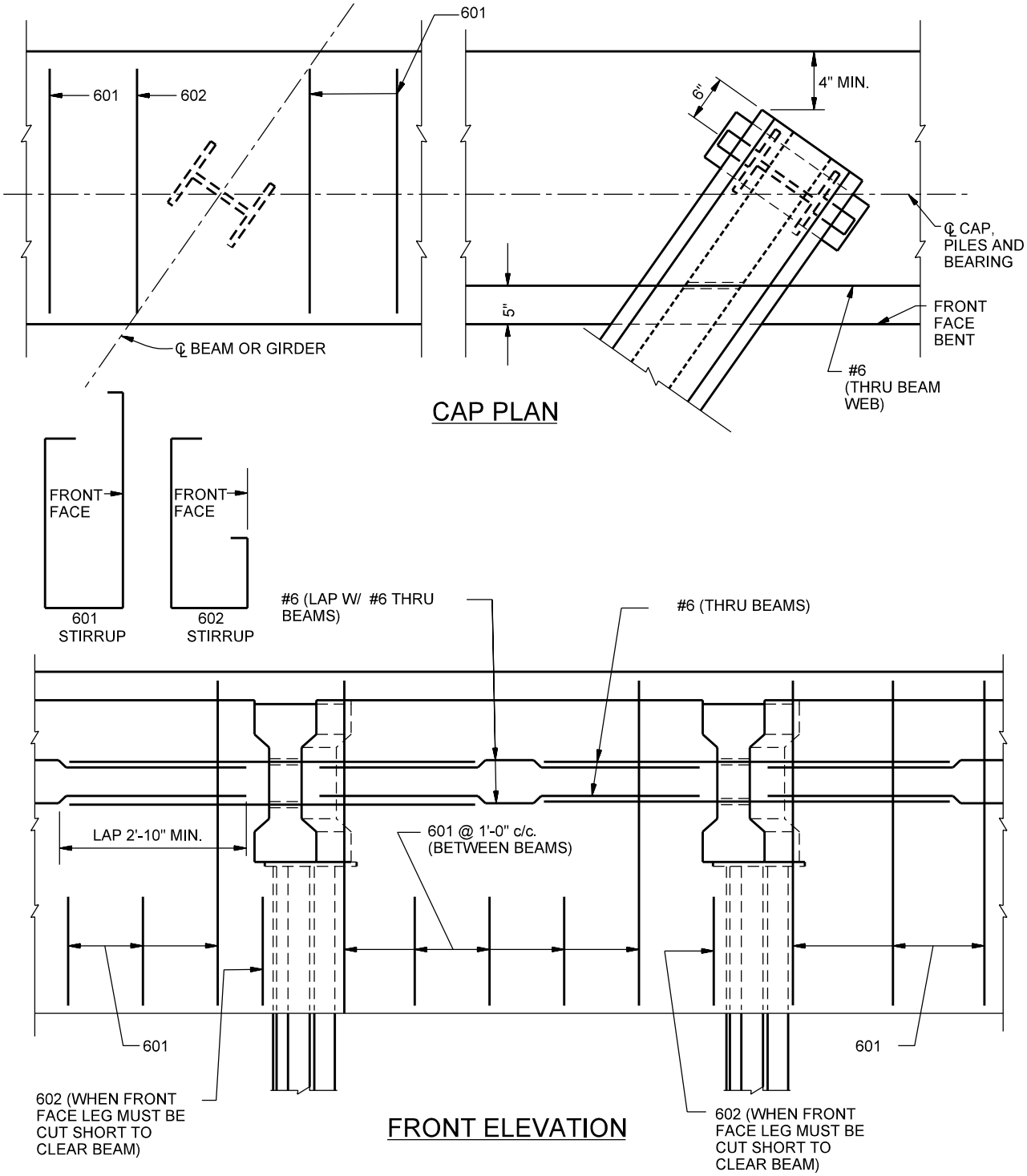

SUGGESTED INTEGRAL END BENT DETAILS
(Beams Attached Directly to Piling, Method A)

Figure 67-1B
(Page 3 of 4)

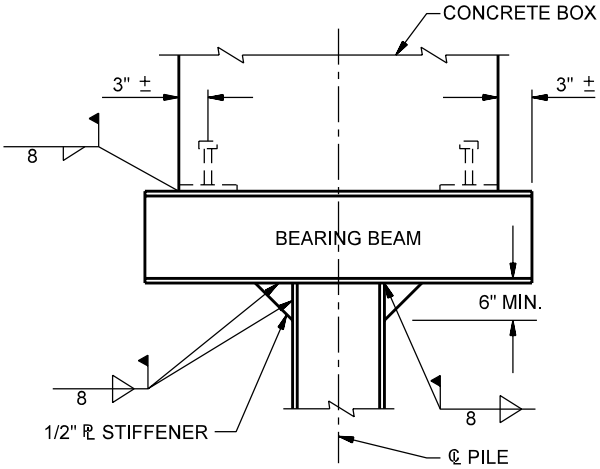

CONCRETE BOX BEAM

END VIEW

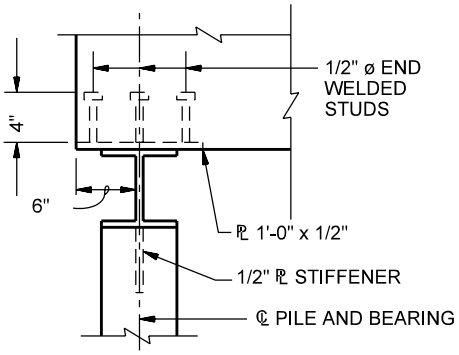

CONCRETE BOX BEAM

SIDE VIEW

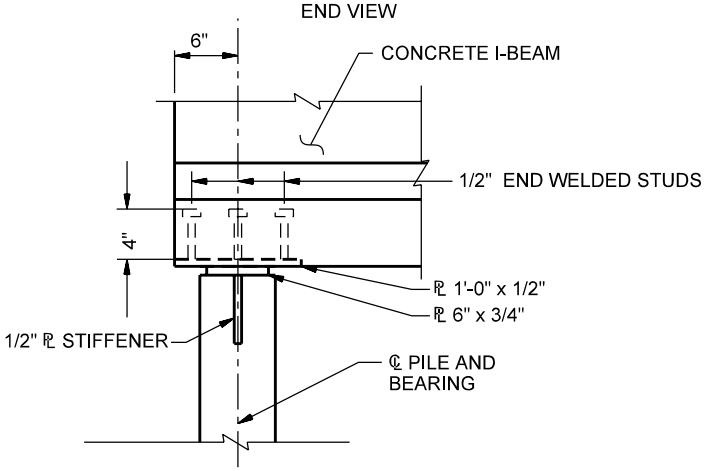

CONCRETE I-BEAM

SIDE VIEW

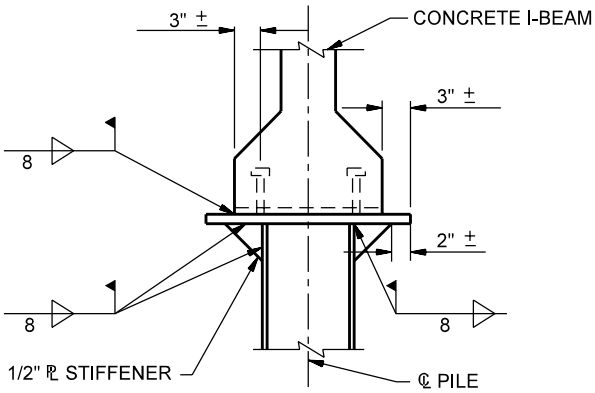

CONCRETE I-BEAM

END VIEW

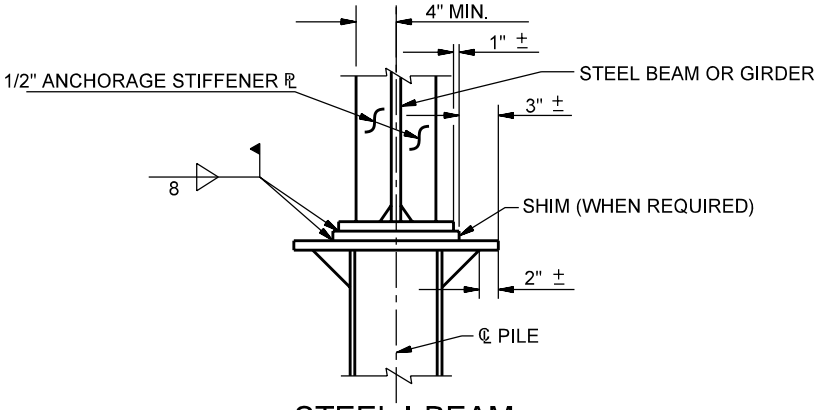

STEEL I-BEAM

END VIEW

SUGGESTED INTEGRAL END BENT DETAILS
(Beams Attached Directly to Piling, Method A)

Figure 67-1B
(Page 4 of 4)