TABLE OF CONTENTS

Table of Contents 1

List of Figures 4
64-1A Steel Weight Curves 4
64-1B Plate Thicknesses 4
64-1C Details for Flange Transitions 4
64-1D Bearing Restraints 4
64-4A Annual Traffic Growth Rates 4
64-4B Schematic of Top Flange Stress 4
64-5A Beam Camber 4
64-5B Typical Intermediate Diaphragm Connection 4
64-5C Typical End Diaphragm Connection 4
64-5D Typical Cross Frames 4
64-5E Alternative Connection Plate Attachment at Tension or Reversal Flange 4
64-5F Welded Connection Plate Attachment at Compression or Tension Flange 4
64-6A Example Placement of Longitudinal Steel (Negative Flexural Reinforcement) 4
64-6B Transverse Intermediate Stiffener Details 4
64-6C Bearing Stiffener 4
64-8A Welding Symbols 4
64-8B Welding Symbols 4
64-8C Welding Symbols 4
64-8D Lamellar Tearing 4
64-8E Typical Submerged Arc Weld Details 4

Chapter Sixty-four 5

64-1.0 GENERAL 5
64-1.01 Economy 5
64-1.01(01) Number of Beam Lines 5
64-1.01(02) Spacing 6
64-1.01(03) Steel Weight Curves 6
64-1.01(04) Moment Sections 6
64-1.01(05) Rolled Beams 6
64-1.02 Design Considerations for Plate Girders 7
64-1.02(01) General 7
64-1.02(02) Haunched Girders 7
64-1.02(03) Longitudinally-Stiffened Webs 7
64-1.02(04) Splices 7
64-1.02(05) Size of Flange 8
64-1.02(06) Flange Transitions 8
64-1.02(07) Web Plates 9
64-1.03 Continuous Structure 9

64-1.04 Composite Action 10
64-1.05 Horizontally-Curved Steel Girder 10
64-1.05(01) General 10
64-1.05(02) Methods of Analysis 11
64-1.05(03) Details 11
64-1.06 Integral End Bents 12
64-1.07 Fracture-Critical Member 12
64-1.08 Other Design Considerations 13

64-2.0 MATERIALS 13
64-2.01 Structural Steels 13
64-2.01(01) Selection 13
64-2.01(02) Hybrid Girder 15
64-2.01(03) Details for Unpainted Weathering Steel 15
64-2.02 Bolts 16
64-2.03 Other Elements 16

64-3.0 LOADS 16
64-3.01 Limit States 16
64-3.02 Distribution of Dead Load 16
64-3.03 Live-Load Deflection 16

64-4.0 FATIGUE CONSIDERATIONS 17
64-4.01 Direct, Load-Induced Fatigue 17
64-4.01(01) Fatigue Stress Range 18
64-4.01(02) Stress Cycles 18
64-4.01(03) Fatigue Resistance 19
64-4.02 Indirect, Distortion-Induced Fatigue 25
64-4.03 Other Fatigue Considerations 26

64-5.0 DIMENSIONING AND DETAILING REQUIREMENTS 26
64-5.01 Dead-Load Camber 26
64-5.01(01) General 26
64-5.01(02) Diagram 27
65-5.02 Minimum Thickness of Steel 27
64-5.03 Diaphragms and Cross-Frames 27
64-5.03(01) General 28
64-5.03(02) Diaphragm Details 28
64-5.03(03) Cross-Frame Details 28
64-5.04 Jacking 29
64-5.05 Lateral Bracing 30
64-5.06 Shims 30

64-6.0 I-SECTIONS IN FLEXURE 30
64-6.01 General 30

64-6.01(01) Negative Flexural Deck Reinforcement 30
64-6.01(02) Stiffness in Negative-Moment Areas 31
64-6.02 Strength-Limit States 31
64-6.03 Service-Limit-State Control of Permanent Deformations 31
64-6.04 Shear Connectors 32
64-6.05 Stiffeners 32
64-6.05(01) Transverse Intermediate Stiffeners 32
64-6.05(02) Bearing Stiffeners 33
64-6.06 Cover Plates 33
64-6.07 Constructability 34
64-6.08 Inelastic Analysis Procedures 34

64-7.0 BOX SECTIONS IN FLEXURE 34

64-8.0 CONNECTIONS AND SPLICES 35
64-8.01 Bolted Connections 35
64-8.02 Welded Connections 36
64-8.03 Splices 37

64-9.0 DESIGN EXAMPLES 39

LIST OF FIGURES

Figure

64-1A Steel Weight Curves
64-1B Plate Thicknesses
64-1C Details for Flange Transitions
64-1D Bearing Restraints
64-4A Annual Traffic Growth Rates
64-4B Schematic of Top Flange Stress
64-5A Beam Camber
64-5B Typical Intermediate Diaphragm Connection
64-5C Typical End Diaphragm Connection
64-5D Typical Cross Frames
64-5E Alternative Connection Plate Attachment at Tension or Reversal Flange
64-5F Welded Connection Plate Attachment at Compression or Tension Flange
64-6A Example Placement of Longitudinal Steel (Negative Flexural Reinforcement)
64-6B Transverse Intermediate Stiffener Details
64-6C Bearing Stiffener
64-8A Welding Symbols
64-8B Welding Symbols
64-8C Welding Symbols
64-8D Lamellar Tearing
64-8E Typical Submerged Arc Weld Details

CHAPTER SIXTY-FOUR

STRUCTURAL STEEL

This Chapter addresses structural-steel requirements in the *LFRD Bridge Design Specifications* that may require amplification, clarification, or an improved application. The Chapter is structured as follows:

1. Section 64-1.0 provides general information for which there is not a direct reference in Section 6 of the *LRFD Specifications*.

2. Sections 64-2.0 through 64-8.0 provide information which augments and clarifies *Specifications* Section 6. To assist in using these Sections, references to the *Specifications* are provided where applicable.

The discussion in this Chapter is essentially restricted to a multi-beam or multi-girder steel superstructure. Unless stated otherwise, the terms beam and girder are used interchangeably. This reflects the popularity of these systems because of their straightforward design, ease of construction, and the potential for aesthetic appearance. In addition, with some exceptions, the State lacks major waterways or large ravines that would require trusses, arches, or suspension systems. Rigid frames have also been omitted because of their expensive fabrication and questionable appearance.

64-1.0 GENERAL

64-1.01 Economy

Factors that influence the cost of a steel girder bridge include, but are not limited to, the type of material, type of substructure, amount of material, fabrication, transportation, and erection. The cost of these factors changes periodically in addition to the cost relationship among them. Therefore, the guidelines used to determine the most economical type of steel girder on one bridge must be reviewed and modified as necessary for another bridge.

64-1.01(01) Number of Beam Lines

The lowest number of beam lines in the cross section as compatible with deck design requirements provides the most economical bridge. The following should be evaluated when considering the economy of the bridge and number of beam lines.

1. The available depth of superstructure governed by vertical-clearance requirements.
2. The cost of stiffeners versus increased web thickness.

An INDOT-route bridge requires a minimum of four beam lines. The use of three beam lines will be permitted on a local-public-agency structure if the designer obtains the written approval of the LPA official(s).

64-1.01(02) Spacing

The type and resistance of the bridge deck are primary factors in determining the optimum spacing of steel beams. The beams should be spaced uniformly across the width of the bridge. A beam spacing of approximately 10 ft is considered the minimum for economical results.

64-1.01(03) Steel Weight Curves

AISC has prepared Steel Weight Curves based on data obtained over several years for cost-effective girder designs (see Figure 64-1A). The curves are based on the use of the AASHTO *Standard Specifications for Highway Bridges* (load factor design), and should be considered as an approximation for a superstructure designed in accordance with the *LRFD Specifications*. The Steel Weight Curves can be used to provide a preliminary estimate of steel weight and a check on the economy of a new design.

64-1.01(04) Moment Sections

The positive-moment section of a plate girder should always be made composite. According to the *LRFD Specifications*, a composite section for the negative-moment area consists of the plate girder and the longitudinal steel in the deck, including slab reinforcement. A large amount of longitudinal slab steel exists throughout the region if the slab is designed by the strip method and somewhat less if designed by the empirical method.

64-1.01(05) Rolled Beams

The major steel manufacturers no longer routinely produce rolled wide-flange sections of deeper than 36 in. If rolled beams of deeper than 36 in. must be used, the NSBA should be contacted to determine their availability and cost.

64-1.02 Design Considerations for Plate Girders

In addition to the information shown in the *LRFD Specifications*, the following applies to the design of structural-steel plate girders.

64-1.02(01) General

Plate girders should be composite and continuous where applicable.

64-1.02(02) Haunched Girders

These are uneconomical for a span of less than 40 ft. They may be used where aesthetics or other special circumstances are involved.

64-1.02(03) Longitudinally-Stiffened Webs

These are uneconomical for a span of less than 300 ft.

64-1.02(04) Splices

Splices are expensive and their number should be minimized. Field splices are used to reduce shipping lengths. Sections should not exceed 115 ft in length without investigation of permits and shipping constraints. The unsupported compression length of a shipped piece divided by the minimum compression-flange width in that piece should be less than approximately 85. As wide a flange plate as practical should be used consistent with stress and *b/t* requirements. This contributes to girder stability and reduces the number of passes and weld volume at flange butt welds.

Use not more than three plate thicknesses (two shop splices) in the top or bottom flange of a field section. Constant flange widths should be used within each field section.

64-1.02(05) Size of Flange

The minimum flange-plate size for a built-up girder is 12 in. x 3/4 in. Figure 64-1B provides commonly-specified plate thicknesses. The flange width should be in increments of 1/4 in. or, preferably, ½-in. increments.

64-1.02(06) Flange Transitions

The change in flange area of a plate girder is usually accomplished by varying the thickness of the plate. However, it may sometimes be more desirable to vary the plate width. In determining the points where changes in plate thickness or width occur, the designer should weigh the cost of butt-welded splices against extra plate cross sectional area. It may often be advantageous to continue the thicker or wider plate beyond the theoretical step-down point to avoid the cost of the butt-welded splice.

An understanding of the most economical method of producing flange material in the shop makes this easier to understand. The most efficient method to construct a flange is to butt-weld together several wide plates of varying thicknesses received from the mill. After welding and non-destructive testing, the individual flanges are stripped from the full plate (See Figure 64-1C). This reduces the number of welds, individual runoff tabs to start and stop welds, the amount of material waste, and the number of X-rays for non-destructive testing. The obvious objective, therefore, is for the flange width to remain constant within an individual shipping length by varying material thickness as required. This also makes it easier to use metal stay-in-place deck forms. This may not always be practical in a girder span of over 300 ft where a flange width transition may be required in the negative-bending regions.

Because structural steel plate is most economically purchased in a width of at least 4 ft, it is advantageous to repeat plate thicknesses as much as practical. In the example shown in Figure 64-1C, many of the plates of like width could be grouped by thickness to meet the minimum 4-ft width purchasing requirement, but the thicker plates do not allow this. In addition, all but the 3-in.-thick plates shown are unique, thereby requiring additional material costs when purchasing plates. Furthermore, each splice must be individually, rather than gang, welded.

The discussion of flange design leads to the question of how much additional flange material can be justified to eliminate a width or thickness transition. Based on the experience of fabricators, approximately 900 lb to 1000 lb of flange material can be saved to justify the cost of a shop splice.

The two additional objectives to consider in designing a flange transition are as follows:

1. The flange cross-sectional area should be reduced by not more than approximately one-half of the area of the heavier flange plate to reduce the build-up of stress at the transition.

2. If a transition in width must be provided, shift the butt splice a minimum of 3 in. from the transition as shown in Figure 64-1C. This makes it much easier to fit run-off tabs, weld and test the splice, and then grind off the run-off tabs.

64-1.02(07) Web Plates

Preliminary design services available through the NSBA and some steel companies may be used for the optimization of the web depth. Other programs or methods may also be used if they are based upon material use and fabrication unit costs. Web depth should always be in 1-in. or, preferably, 2 in increments. Web thickness should be in 1/16-in. increments.

Web design can have a significant impact on the overall cost of a plate girder. Considering material costs, it is desirable to make the girder web as thin as design considerations will permit. However, this may not always produce the greatest economy, since fabricating and installing stiffeners is one of the more labor-intensive of shop operations.

The use of transverse stiffeners should be determined using the following guidelines and, except for diaphragm connections, should be placed on only one side of the web.

Web Depth	Stiffener Usage
< 4’-4”	Unstiffened
4’-4” ≤ Depth ≤ 5’-6”	Partially Stiffened
> 5’-6”	Fully Stiffened

An unstiffened web is the thinnest web allowed by the *LRFD Specifications* without transverse stiffeners. A partially-stiffened web is approximately 0.0625 in. thinner than an unstiffened web. A fully-stiffened web is the thinnest web allowed by the *Specifications* in combination with the maximum number of transverse stiffeners. A minimum web thickness of 3/8 in. shall be used.

64-1.03 Continuous Structure

Span-by-span continuity enhances both the strength and rigidity of the structure. However, the most significant benefit of structural continuity is the reduction in the number of deck expansion joints. Open or leaking deck joints may cause extensive damage to beam ends, diaphragms, bearings, bent caps, or pier caps. See Chapter Sixty-one for more discussion on bridge-deck expansion joints.

64-1.04 Composite Action

Composite action enhances both the strength and rigidity of the beam. Composite action is mandatory in the positive-moment region. The designer may use composite action in the negative-moment region except in a horizontally-curved girder. A composite girder should be designed to be composite along its entire length.

Deck concrete should be considered effective in the negative-moment region for determining live-load deflection at service limit state. For design, concrete in tension is ignored when checking the strength limit state. The deck reinforcing steel can be considered to act with the steel section if shear connectors are provided. The composite-section depth should be reduced by 0.5 in. due to the wearing surface.

64-1.05 Horizontally-Curved Steel Girder

The design of a horizontally-curved structural-steel beam should be based on the AASHTO *Guide Specifications for Horizontally Curved Steel Girder Highway Bridges*. These requirements apply to the design and construction of a highway superstructure with horizontally curved steel I-shaped or single-cell box-shaped longitudinal girders with spans of up to 300 ft and radii greater than 100 ft. For further limitations, see *Guide Specifications* Section 1.1. The following provides additional information.

64-1.05(01) General

The effect of curvature should be accounted for if the components are fabricated to a horizontal curve. The magnitude of the effect of horizontal curvature is primarily a function of radius, girder spacing, span, diaphragm spacing, and, to a lesser degree, depth and flange proportions. The effect of curvature develops in two ways that are either nonexistent or insignificant in a tangent bridge. First, the general tendency is for each girder to overturn, which has the effect of transversely transferring both dead and live load from one girder to another. The net result of this load transfer is that some girders carry more load and others less. The load transfer is carried through the diaphragms and the deck. The second effect of curvature is the concept of flange bending caused by torsion in curved components being almost totally resisted by horizontal shear in the flanges. The horizontal shear results in moments in the flanges. The stresses caused by these moments will either add to or reduce the stresses from vertical bending. The torsion also causes warping of the girder webs.

The *LRFD Specifications* currently do not include design requirements for a horizontally-curved steel bridge. Until such curved-girder requirements are developed, a bridge including a curved segment must be designed by means of load factor design using the current HS loadings.

64-1.05(02) Methods of Analysis

A curved system should be analyzed for design by means of a rigorous structural method or by means of the method provided in the *NSBA Highway Structures Design Handbook*, Volume I, Chapter 12, except where curvature is within the limits as specified in *Guide Specifications* Section 4.2. Several methods for determining the magnitude of the effects of curvature are permitted if it can be demonstrated that the results will be accurate for a specific curved structure, and if the magnitude of the two effects described in Section 64-1.05(01) can be determined. The method used should be coordinated with, and have the prior approval of, the Production Management Division director. See *Guide Specifications* Section 4.3 for further information.

64-1.05(03) Details

Each curved steel simple-span or continuous-span bridge should have its diaphragms directed radially except for the end diaphragms, which should be placed parallel to the centerlines of bearings. To reduce the effect of horizontal-flange bending, space diaphragms at 15 ft or less for a structure of 200-ft radius or less, or to a maximum of 25 ft for a structure of 1000-ft radius or greater.

Design all diaphragms, including their connections to the girders, to carry the total load to be transferred at each diaphragm location. For a sharply-curved structure, full-depth diaphragms with connections to the girder webs and flanges may be required to carry the flange shears out of the girders without overstressing the girder web-to-flange weld. See *Guide Specifications* Section 9.3 for further information.

The expansion and girder-rotation characteristics should be considered. Temperature change causes a volumetric change. On a curved structure, expansion between fixed and expansion bearings will occur along a straight line or along the chord between the two points. To keep the structure in line with the abutment or the adjacent-span girders, use expansion bearings with freedom of horizontal movement in all directions for all girders except the girder nearest to the center of the bridge. The end expansion bearing for the centermost girder of continuous spans should restrict radial movement only at the end support and restrict tangential movement only at one interior support. For a simple span, one of the expansion bearings should provide restraint against both radial and tangential movement. Both expansion and fixed bearings should provide

for angular rotation about a radial line of each bearing. See Figure 64-1D for a graphical presentation of this discussion.

Where the longitudinal or transverse forces are too large to be carried by a single bearing or single substructure element, provide bearings that will permit horizontal movement along the chord from the fixed bearing line to the expansion bearing line. Both the fixed and expansion bearings should provide for rotation about a radial line. This will require a bearing with a capacity for rotation in two directions at the expansion bearing to provide for the chord movement.

Design the splice in the flange of a curved stringer to carry flange bending or lateral bending stresses and vertical bending stresses in the flange.

Flange-tip stresses should be in accordance with the AASHTO *Standard Specifications for Highway Bridges* (load factor design).

64-1.06 Integral End Bents

Chapter Sixty-seven discusses the design of an integral end bent. The following applies to the use of integral end bents in combination with a steel superstructure.

1. Bridge Length. Integral end bents which are empirically designed may be used with a structural-steel bridge where the superstructure expansion length from the superstructure point of no movement to the integral end bent does not exceed the value shown in Figure 67-1A.

2. Deck Pour. Place an interior diaphragm within 10 ft of the end support to provide beam stability during the deck pour.

3. Anchorage. Each steel beam or girder should have 0.5-in.-thickness stiffener plates welded to both sides of the web and to the flanges over the supports to anchor the beam into the concrete cap. A minimum of three holes should be provided through the web to allow #6 bars to be inserted to further anchor the beam to the cap.

64-1.07 Fracture-Critical Member

A fracture-critical member is a steel component in tension whose failure is expected to result in the collapse of the bridge or the inability of the bridge to perform its function.

The designer should determine which components, if any, are fracture-critical members. Such components should be identified on the plans. The INDOT *Standard Specifications* address non-fracture-critical members. If a structure includes fracture-critical members or steel main members with yield strength of greater than 50 ksi, the designer must prepare a unique special provision to specify the Charpy V-notch requirements.

Indiana is in temperature zone designation 2, minimum service temperature 0°F to -30°F with respect to Charpy V-notch impact requirements.

64-1.08 Other Design Considerations

At the stress-limit state, a beam should be designed for the sum of the steel and concrete slab dead loads acting on the beam alone, plus the superimposed dead load and live load acting on the composite section. Shrinkage need only be considered for a very long span or unusual configurations. At the strength-limit state for a compact section, large-scale inelastic activity is presumed to rearrange stress distributions in a section such that the history of stress build-up need not be considered. At a non-compact section where the factored flexural resistance is limited to the yield stress, the history of stress build-up must be considered.

LRFD Specifications Section 6 includes an appendix. Appendix D provides formulas for computing the plastic moment for both the positive- and negative-moment section. It also explains procedures for determining the yield moment of a composite section. Appendix C provides a step-by-step approach for the design of a steel bridge superstructure. Appendix C is a convenient starting point for the design process.

64-2.0 MATERIALS

Reference: Article 6.4

64-2.01 Structural Steels

64-2.01(01) Selection

The most cost-effective choice of steel grade is unpainted ASTM A 709 Grade 50W weathering steel. Its initial cost advantage compared to painted high-strength steel (e.g., A 709 Grade 50) can range up to 15%. When compared to painted ASTM A 709 Grade 36 steel, the cost advantage is approximately 20%. If future repainting costs are considered, the cost advantage is more substantial. This reflects, for example, environmental considerations in the removal of paint, which can make the use of painted steel prohibitive.

Except for long spans, the use of a steel grade higher than Grade 50 may not be cost effective. In the traditional span ranges of 150 ft to 200 ft, optimization studies have demonstrated that the higher strength ASTM A 709 Grade HPS 70W often carries a cost premium of approximately 20% compared to Grade 50W. The use of Grade HPS 70W, when compared to Grade 50W, typically incurs the disadvantages as follows.

1. The material cost is approximately 15% higher.
2. A lighter section with higher strength results in increased fatigue stress ranges with no offsetting increase in nominal fatigue resistance.
3. Lighter compression flanges near supports may increase the lateral-bracing requirements.
4. Although seldom used for a typical design, moment redistribution and inelastic analysis procedures are not permitted with Grade HPS 70W.

Use of Grade HPS 70W steel will be subject to the approval of the Production Management Division director for each INDOT-route structure. The economic analysis prepared at the structure type and size stage will serve as the basis for this decision. For a local-public-agency structure, the designer must obtain the written approval of an elected official of the agency.

Despite its cost advantage, the use of weathering steel is not appropriate in every environment or at every location. The application of weathering steel and its potential problems are discussed in depth in the FHWA *Technical Advisory: Uncoated Weathering Steel in Structures*, October 3, 1989. Also, the proceedings of the Weathering Steel Forum, July 1989, are available from the FHWA Office of Implementation, HRT-10. Weathering steel should not be used where the following adverse conditions exist.

1. Environment. Weathering steel should not be used in an industrial area where concentrated chemical fumes may drift onto the structure. If in doubt, its suitability should be determined by a corrosion consultant.

2. Location. Weathering steel should not be used at a grade separation in a tunnel condition, which is produced due to a depressed roadway section with narrow shoulders between vertical retaining walls, with a shallow vertical clearance, or with deep abutments adjacent to the shoulders. This tunnel effect prevents roadway spray from being dissipated and spread by air currents. There is no evidence of salt-spray corrosion where the longitudinal extent of the vertical walls is limited to the abutment itself and roadway spray can be dissipated on both approaches.

3. Low-Level Water Crossing. Sufficient clearance over a body of water should be maintained so that water vapor condensation does not result in prolonged periods of wetness on the steel. For weathering steel, clearance to the bottom flange should be at

least 10 ft over sheltered, stagnant water and at least 8 ft above the average low-water level for a running stream.

Where unpainted weathering steel is inappropriate, and a concrete-members alternative is not feasible, the most economical painted steel is ASTM A 709 Grade 50 steel in both webs and flanges.

The FHWA *Technical Advisory: Uncoated Weathering Steel in Structures* is an excellent source of information, but its recommendation for partial painting of the steel in the vicinity of deck joints should not be considered the first choice. The best solution is to eliminate deck joints. In a shorter bridge, the end joint is replaced by an integral end bent (see Chapter Sixty-seven).

64-2.01(02) Hybrid Girder

Grade HPS 70W flanges with a Grade 50W web, or Grade 50 flanges with a Grade 65 web are permitted.

64-2.01(03) Details for Unpainted Weathering Steel

The following drainage treatments should be considered to avoid premature deterioration.

1. A drip bead should be provided at the end of each deck overhang.

2. The number of bridge deck drains should be minimized, the drainage pipes should be generous in size, and they should extend below the steel soffit as specified in Chapter Thirty-three.

3. Eliminate details that serve as water and debris traps. Seal or paint overlapping surfaces exposed to water. This applies to non-slip-critical bolted joints. Slip-critical bolted joints or splices should not produce rust-pack where the bolts are spaced according to the *LRFD Specifications* and, therefore, do not require special protection.

4. Consider protecting pier caps and abutment walls to minimize staining.

5. Consider wrapping the piers and abutments during construction to minimize staining while the steel is exposed to rainfall.

6. If an expansion joint is used, paint the superstructure steel within 10 ft of the joint.

64-2.02 Bolts

Reference: Article 6.4.3

High-strength bolts should be specified as follows:

1. Weathering Steel: 7/8 in. dia., A325M (Type 3) Open Holes: 15/16 in. dia.
2. Painted Steel: 7/8 in. dia., A325M (Type 1) Open Holes: 15/16 in. dia.

For an exceptionally large structure, A325 or A490 bolts may be used with 1-in. diameter bolts and 1 1/16-in. open holes.

64-2.03 Other Elements

If painted ASTM A 709 Grade 50 steel is to be used in the web and flanges, all steel for stiffeners, secondary members, connections, and diaphragms should be ASTM A 709 Grade 36, unless a higher strength is justified due to significant forces in these members. Grade 36 steel shall not be used for these secondary members if unpainted weathering steel is used in the webs and flanges. Steel for all splices should be the same material as used in the web and flanges of a built-up girder.

For a steel bridge to be painted, the designer must specify the color on the plans or in a special provision. For unpainted weathering steel, a color must be specified if any of the steel will be painted. See the INDOT *Standard Specifications* for a table of colors.

64-3.0 LOADS

64-3.01 Limit States

See Section 60-1.0 for a discussion on limit states.

64-3.02 Distribution of Dead Load

See Section 60-2.0 for a discussion on the distribution of dead load.

64-3.03 Live-Load Deflection

Reference: Article 2.5.2.6.2

Except for certain kinds of decks or a three-sided structure, live-load-deflection consideration is optional in the *LRFD Specifications*. However, live-load plus dynamic-load allowance deflection is limited to 1/800 of the span length for the design of a steel beam or plate girder structure of simple or continuous spans. For a structure in an urban area used by pedestrians or bicyclists, live-load deflection should be limited to the 1/1000 of the span length. The span length used to determine deflection should be assumed to be the distance between centers of bearings or other points of support.

Live-load deflection should be evaluated in accordance with *LRFD Specifications* Article 2.5.2.6.2. The deflection of the girders should be based on the stiffness of the short-term composite section assuming the entire concrete deck to be fully effective over the entire span length. In effect, the distribution of live loads is the number of loaded lanes divided by the number of girders. The concrete deck should be considered to act compositely with the girder even though sections of the girder may not be designed as composite.

For horizontally-curved girders, uniform participation of the girders should not be assumed. Instead, the live load should be placed to produce the maximum deflection in each girder individually in the span under consideration. If multiple lanes are loaded, multiple presence factors should be applied.

64-4.0 FATIGUE CONSIDERATIONS

Reference: Article 6.6

LRFD Specifications Article 6.6.1 categorizes fatigue as either load-induced or distortion-induced. Actually, both are load-induced, but the former is a direct cause of loading, and the latter is an indirect cause in which the force effect, normally transmitted by a secondary member, may tend to change the shape of the cross section of a primary member.

64-4.01 Direct, Load-Induced Fatigue

Reference: Article 6.6.1.2

Article 6.6.1.2 provides the framework of analysis to evaluate load-induced fatigue. This Section provides additional information on the implementation of Article 6.6.1.2 and defines interpretation of the *LRFD* requirements.

Load-induced fatigue is determined by the following:

1. the stress range induced by the specified fatigue loading at the point under consideration;
2. the number of repetitions of fatigue loading a steel component will experience during its 75-year design life. This is influenced by the truck volume expected; and
3. the nominal fatigue resistance for the Detail Category being investigated.

64-4.01(01) Fatigue Stress Range

The fatigue stress range is the difference between maximum and minimum stresses within a component subject to a net tensile stress caused by a single design truck which can be placed anywhere on the deck within the boundaries of a design lane. If a refined analysis method is used, the design truck should be positioned to maximize the stress in the detail under consideration. The design truck should have a constant 30-ft spacing between the 32-kip axles. The dynamic-load allowance is 0.15, and the fatigue-load factor is 0.75.

Fatigue should be considered in those regions of a steel member either having a net applied tensile stress, or where the unfactored permanent loads produce a compressive stress less than twice the maximum fatigue tensile stress.

Unless a refined analysis method is used, the single design lane load distribution factor in *LRFD* Article 4.6.2.2 should be used to determine fatigue stresses. This distribution factor incorporates a multiple presence factor of 1.2, which should be removed by dividing either the distribution factor or the resulting fatigue stresses by 1.2.

For a flexural member with shear connectors provided throughout its entire length, and with slab reinforcement satisfying *LRFD* Article 6.10.1.7, the live-load stress range may be computed using the short-term composite section assuming the concrete slab to be fully effective for both positive and negative flexure.

64-4.01(02) Stress Cycles

LRFD Specifications Article 6.6.1.2.5 defines the number of stress cycles, *N*, as:

$$N = (365)(75)(ADTT)pn \qquad \text{(Equation 64-4.1)}$$

where:

ADTT = Average Daily Truck Traffic, or the number of trucks per day headed in one direction averaged over the design life of the structure. The Department's method of averaging is described in Examples 64-4.1 and 64-4.2 below.

p = the fraction of the total ADTT which will occupy a single lane. This is defined in *LRFD* Article 3.6.1.4.2. If one direction of traffic is restricted, p should be taken as follows:

1 lane, $p = 1.00$
2 lanes, $p = 0.85$
3 or more lanes, $p = 0.80$

n = number of stress range cycles per truck passage. As defined in *LRFD* Article 6.6.1.2.5, for a simple or continuous span of less than 40 ft, $n = 2.0$. For a span of 40 ft or longer, $n = 1.0$. For locations within 0.1 of the span length from a continuous support, $n = 1.5$.

N/n, based on Equation 64-4.1, represents the total accumulated number of truck passages in a single lane during the 75-year design life of the structure. Traffic volume will, of course, increase over time. Figure 64-4A provides the annual growth rates based on recommendations by the Planning Division's Traffic Monitoring Team. The designer should contact the Traffic Monitoring Team for more specific and up-to-date annual growth rates which may be available.

If calculating truck volume based on the growth rates, the designer should consider the traffic-carrying limits of the facility. Once the traffic volume on the facility reaches its capacity, no additional vehicles can presumably use the facility. The total traffic on the structure, both cars and trucks, becomes saturated when the volume reaches approximately 20,000 vehicles/lane/day. This represents an upper limit for traffic volume. A higher value should not be used for determining live-load cycles.

Examples 64-4.1 and 64-4.2 illustrate the application of these growth rates to determine the total fatigue live-load cycles over the 75-year design life of the structure.

64-4.01(03) Fatigue Resistance

LRFD Specifications Article 6.6.1.2.3 groups the fatigue resistance of various structural details into eight categories, A through E′, plus two categories for axial tension in bolts. Detail Categories A, B, and B′ are seldom critical. Investigation of details with a fatigue resistance greater than Category C may be only occasionally appropriate. For example, Category B applies to base metal adjacent to slip-critical bolted connections and should be evaluated if thin splice plates or connection plates are to be used. The *Specifications* require that the fatigue stress range for Detail Categories C through E′ must be less than the fatigue resistance for each respective Category.

The fatigue resistance for a category is determined from the interaction of Category Constant *A* and the total number of stress cycles *N* experienced during the 75-year design life of the structure.

This resistance is defined as $(A/N)^a$. A Constant Amplitude Fatigue Threshold is also established for each Category. If the applied fatigue stress range is less than half of the threshold value, the detail has infinite fatigue life.

Fatigue resistance is independent of the steel strength. The application of a higher-grade steel causes the fatigue stress range to increase, but the fatigue resistance remains the same. These imply that fatigue may become a controlling factor where a higher-strength steel is used.

* * * * * * * * * *

<u>Example 64-4.1</u>

<u>Given</u>: 2-lane rural collector
Current AADT = 3000 vpd (1500 vpd each direction)
Percent trucks = 13%
Two spans, 165 ft each
Connection plate located 32 ft from the interior support
Unfactored dead-load stress in bottom flange = 4 ksi compression
Unfactored fatigue stresses in bottom flange using unmodified single-lane distribution factor = 3.9 ksi tension and 4.9 ksi compression

<u>Find</u>: Determine the fatigue adequacy at the toe of a transverse connection-plate-to-bottom-flange weld.

<u>Solution:</u>

Step 1: The *LRFD Specifications* classifies this connection as Detail Category CN. Therefore:

Constant $A = 44 \times 10^8$ ksi^3 (Table 6.6.1.2.5-1)
$(\Delta F)_{TH}$ = Constant Amplitude Fatigue Threshold = 12 ksi (Table 6.6.1.2.5-3)

Step 2: Compute the factored live-load fatigue stresses by applying dynamic load allowance and fatigue load factor, and removing the multiple presence factor:

Tension:	3.9(1.15)(0.75)/1.2	=	2.8 ksi
Compression:	4.9(1.15)(0.75)/1.2	=	<u>3.5 ksi</u>
	Fatigue Stress Range	=	6.3 ksi

Step 3: Determine if fatigue must be evaluated at this location:

Net tension = (DL stress) – (Fatigue stress)
Net tension = 4 ksi (Compressive) – 2.8 ksi (Tensile)
= 1.2 ksi (Compressive)

Although there is no net tension at the flange, the unfactored compressive DL stress of 4 ksi does not exceed twice the tensile fatigue stress of 5.6 ksi. Therefore, fatigue must be considered.

Step 4: Compute the number of years required for the one-lane directional traffic on the structure to reach the saturation volume of 20,000 vehicles/lane/day:

$$20{,}000 = (1500)(1.0245)^{Yr}$$

$$Yr = \frac{\log\left(\frac{20000}{1500}\right)}{\log 1.0245} = 107 \text{ years}$$

Therefore, the structure will not reach traffic-volume saturation during its 75-year design life.

Step 5: Compute the total number of truck passages over the design life of the structure for both directions of travel, as follows:

$$V_T = \frac{365V_o\left[(1+r)^t - 1\right]}{r} \qquad \text{(Equation 64-4.2)}$$

Where: V_T = Total number of truck passages (both directions)
V_o = Current average daily number of trucks (both directions)
r = annual traffic growth rate (Figure 64-4A), decimal
t = Design life of structure, years

For this Example:

V_o = (3000) (0.13) = 390
r = 2.45% = 0.0245 (Figure 64-4A)
t = 75 years

Equation 64-4.2 becomes the following:

$$V_T = \frac{(365)(390)\left[(1+0.0245)^{75}-1\right]}{0.0245}$$

$$V_T = 29.88 \text{ x } 10^6$$

Step 6: Compute the total number of truck passages per direction during the 75-year design life, as follows:

$$V_T \text{ / Direction} = (29.88 \text{ x } 10^6)(0.5) = 14.94 \text{ x } 10^6$$

Step 7: Determine *p* and *n* for Equation 64-4.1:

Since this is a two-lane structure carrying bi-directional traffic, all truck traffic headed in one direction can occupy only one lane. Therefore, p = 1.0. See *LRFD* Article 3.6.1.4.2.

The span exceeds 40 ft and the point being considered is located more than 0.1 of the span length away from the interior support. Therefore, n = 1.0. See Equation 64-4.1.

Step 8: Using Equation 64-4.1, compute the number of stress cycles:

$N = (14.94 \text{ x } 10^6)pn$
$N = (14.94 \text{ x } 10^6)(1.0)(1.0)$
$N = 14.94 \text{ x } 10^6$

Step 9: Compute the nominal fatigue resistance:

<u>Fatigue Resistance</u> <u>75-Year Life</u> <u>Infinite Life</u>

$$(\Delta F)_n = (A/N)^a \geq ½\,(\Delta F)_{TH}$$

First, check the infinite-life term. This will frequently control the fatigue resistance where traffic volume is large. $(\Delta F)_n$ = ½$(\Delta F)_{TH}$ = 0.5(12 ksi) = 6 ksi. Because the fatigue stress range of 6.3 ksi exceeds the infinite-life resistance of 6 ksi, the weld does not have infinite fatigue life.

Step 10: Check to see if the weld will have at least a 75-year fatigue life:

$$\begin{aligned}(\Delta F)_n &= (A/N)^a \\ &= [(44 \text{ x } 10^8)/(14.94 \text{ x } 10^6)]^{1/3} \\ &= 6.7 \text{ ksi}\end{aligned}$$

The 75-year fatigue resistance (6.7 ksi) exceeds the fatigue stress range (6.3 ksi); therefore, the weld is satisfactory.

* * * * * * * *

Example 64-4.2

Given: 2-lane freeway bridge carrying westbound traffic only
Current AADT = 20,000 vpd (10,000 vpd in westbound lanes)
Percent trucks = 22%
Two-span continuous bridge, 165 ft each
Area investigated is located 13 ft from interior support
Unfactored dead-load stress in the top flange = 7.8 ksi Tension
Unfactored fatigue stresses in the top flange using unmodified single lane distribution factor = 5.6 ksi Tension and 0.9 ksi Compression

Find: Determine the fatigue adequacy of the top flange with welded stud shear connectors in the negative-moment region.

Solution:

Step 1: The *LRFD Specifications* classifies this connection as Detail Category C. Therefore:

Constant $A = 44 \times 10^8$ ksi^3 (*LRFD* Table 6.6.1.2.5-1)
$(\Delta F)_{TH}$ = Constant Amplitude Fatigue Threshold = 10 ksi
(*LRFD* Table 6.6.1.2.5-3)

Step 2: Compute the factored live-load fatigue stresses by applying dynamic-load allowance and fatigue load factor, and removing the multiple-presence factor.

Tension:	5.6(1.15)(0.75)/1.2	=	4.0 ksi
Compression:	0.9(1.15)(0.75)/1.2	=	0.6 ksi
	Fatigue Stress Range	=	4.6 ksi

Step 3: Compute the number of years required for the westbound traffic on the structure to reach saturation volume of 20,000 vehicles/lane/day:

Total for 2 lanes = 2 x 20,000 = 40,000 vpd
$40{,}000 = 10{,}000\,(1.0307)^{Yr}$

$$Yr = \frac{\log\left(\frac{40000}{10000}\right)}{\log 1.0307} = 46 \text{ years}$$

Therefore, the structure will reach traffic volume saturation at Year 46 during its 75-year design life.

Step 4: Compute the total number of truck passages during the first 46 years of the design life of the westbound structure, as follows:

$$V_T = \frac{365\ V_o\ \left((1+r)^t - 1\right)}{r} \qquad \text{(Equation 64-4.2)}$$

Where:

V_T	=	Total number of truck passages
V_o	=	Current average daily number of trucks (WB lanes)
r	=	Annual traffic growth rate (Figure 64-4A), decimal
t	=	Design life of structure, years

For this Example:

V_o	=	10,000 x 0.22 = 2200
r	=	3.07% = 0.0307 (Figure 64-4A)
t	=	46 years

Equation 64-4.2 becomes the following:

$$V_T = \frac{(365)(2200)\left((1+0.0307)^{46} - 1\right)}{0.0307}$$

$$V_T = 78.96 \times 10^6$$

Step 5: Compute the total number of truck passages from Year 47 to Year 75.

At the beginning of Year 47, the ADTT is $(2200)(1.0307)^{46} = 8841$

Because the facility reaches saturation at this point, the ADTT will be 8841 for the last 29 years of the 75-year design life. Therefore, the total number of truck passages from Year 47 to Year 75 is:

$$V_T = (365)(8841)(29)$$
$$= 93.58 \times 10^6$$

Step 6: Compute the total number of truck passages during the 75-year design life:

$$V_T = (78.96 + 93.58) \times 10^6$$
$$= 172.54 \times 10^6$$

Step 7: Determine *p* and *n* for Equation 64-4.1:

Because this is a two-lane structure carrying one-directional traffic, 85% of the total truck traffic is assumed to occupy the outside lane. Therefore, $p = 0.85$. See Article 3.6.1.4.2.

The span exceeds 40 ft but the point being considered is located less than 0.1 of the span length away from the interior support. Therefore, $n = 1.5$. See Equation 64-4.1.

Step 8: Using Equation 64-4.1, compute the number of stress cycles as follows:

$$N = (172.54 \times 10^6)pn$$
$$N = (172.54 \times 10^6)(0.85)(1.5)$$
$$N = 219.99 \times 10^6$$

Step 9: Compute the nominal fatigue resistance as follows:

<u>Fatigue Resistance</u> <u>75-Year Life</u> <u>Infinite Life</u>

$$(\Delta F)_n = (A/N)^a \geq ½\,(\Delta F)_{TH}$$

First, check the infinite life term. See *LRFD Specifications* Commentary C6.6.1.2.5 for a table of single-lane ADTT values for each detail category described above for which the infinite-life check governs. This will frequently control the fatigue resistance where traffic volume is large. $(\Delta F)_n = ½(\Delta F)_{TH} = 0.5(10 \text{ ksi}) = 5 \text{ ksi}$. Because the fatigue-stress range of 4.6 ksi is less than the infinite-life resistance of 5 ksi, the flange has infinite fatigue life and there is no need to check the 75-year fatigue life. The flange is satisfactory.

Requirements for investigating the fatigue resistance of shear connectors are provided in *LRFD* Articles 6.10.7.4.2 and 6.10.7.4.3.

* * * * * * * * * *

64-4.02 Indirect, Distortion-Induced Fatigue

Reference: Articles 6.6.1.3.1 and 6.6.1.3.2

The above-referenced Articles provide specific detailing practices for transverse and lateral connection plates intended to reduce significant secondary stresses which could induce fatigue crack growth. The *Specifications* are concise and direct and require no mathematical computation; therefore, no further elaboration is necessary.

64-4.03 Other Fatigue Considerations

The designer should ensure compliance with fatigue requirements for all structural details (stiffeners, connection plates, lateral bracing, etc.) shown on the plans. During construction, field personnel will desire to field-weld attachments, either permanent or temporary, to the top flange to facilitate setting deck forms and other appurtenances. The plans for a continuous structure should include a sketch showing the location of compression, reversal, and tension regions along the girder top flange. Show the length of each stress region and reference each to the point of support. Figure 64-4B illustrates the information required. This sketch will provide the field personnel with the necessary information to prevent welding in tension or reversal zones which could be detrimental to the fatigue life of the structure.

Brackets, clips, supports, gussets, or other detail materials should not be welded to members or components subjected to tensile stresses unless the maximum net tensile stress at the point of welding does not exceed the permitted fatigue stress.

The fatigue requirements described elsewhere in *LRFD Specifications* Chapter 6 should be considered. They include the following.

1. Fatigue due to out-of-plane flexing in web of plate girder, Article 6.10.5.3.
2. Fatigue in shear connectors, Articles 6.10.10.2 and 6.11.10.
3. Bolts subject to tensile fatigue, Article 6.13.2.10.3.

64-5.0 DIMENSIONING AND DETAILING REQUIREMENTS

Reference: Article 6.7

64-5.01 Dead-Load Camber

Reference: Article 6.7.2

64-5.01(01) General

Steel beams or girders must be cambered to compensate for the vertical-curve offset and dead-load deflections. Camber will be calculated to the nearest 1/16 in. Dead load should include the weight of the steel, and deck and railing, but not the future wearing surface. The effects of superelevation and longitudinal prestressing, where applicable, should also be considered. All beams or girders should be assumed to equally contribute to flexural resistance. Unfactored force effects should be used to determine the deflections.

64-5.01(02) Diagram

The plans should include a diagram and an optional table showing total camber due to the effects listed in Section 64-5.01(01). Figure 64-5A illustrates an example of the no-load camber and reaming diagram for bolted field splices and the table of cambers. Camber should be computed assuming the girder is lying on its side; i.e., not loaded. This information is required for fabrication. The sketch should reference dimensions to the bottom edge of the web; i.e., assuming that flanges have not been attached.

The basic reference line should extend as a straight line from the two end supports along the centerline of the girder. At each interior support, provide a dimension from this reference line to the bottom of the web. This dimension is numerically equal to the offset of the profile grade from a straight line extending through the end bent stations along the profile grade line. These are control dimensions for assembling the girder sections for reaming.

Within each span, establish another reference line extending between supports, and reference camber ordinates to this line. Camber is cut into the webs of plate girders using these dimensions. Camber ordinates are given in inches at the quarter points and at each splice location.

<u>65-5.02 Minimum Thickness of Steel</u>

Reference: Article 6.7.3

The thicknesses of steel elements should not be less than the following.

1. Plate-girder flange, 3/4 in.
2. Web for rolled beam or channel, 1/4 in.
3. All other structural-steel elements, 5/16 in.

<u>64-5.03 Diaphragms and Cross-Frames</u>

Reference: Article 6.7.4

The use of diaphragms and cross-frames should be considered. Their purpose is to stabilize the beams during and after construction and to distribute gravitational, centrifugal, and wind loads. A maximum spacing of diaphragms and cross-frames of 25 ft may be used unless a detailed analysis is performed based on *LRFD Specifications* Article 6.7.4. Where integral end bents are

used, the first interior diaphragm must be placed within 10 ft of the centerline of bearing to provide beam stability prior to and during the deck pour.

64-5.03(01) General

The following applies to diaphragms and cross-frames.

1. Location. Place diaphragms or cross-frames at each support and throughout the span at an appropriate spacing. The location of the field splices should be planned to avoid conflict between the connection plates of the diaphragms or cross-frames and the splice material.

2. Skew. Place all intermediate diaphragms and cross-frames perpendicular to the beams or girders. For a skew of less than 15 deg, the intermediate diaphragms and cross-frames should be continuous and not staggered.

3. Ends. End diaphragms and cross-frames should be placed along the centerline of bearing. Set the top of the diaphragm below the top of the beam or girder to accommodate the joint detail and the thickened slab at the end of the superstructure deck, where applicable.

4. Curved Structure. Diaphragms or cross-frames connecting curved girders should be radial.

64-5.03(02) Diaphragm Details

For a span composed of rolled beams, diaphragms at continuous supports and at intermediate span points may be detailed as illustrated in Figure 64-5B. Figure 64-5C illustrates the typical end-diaphragm connection details for rolled beams. Plate girders with web depths of 42 in. or less should have the same diaphragm details. For plate girders with webs deeper than 42 in., use cross-frames as detailed on Figure 64-5D.

Intermediate diaphragms should be designed and detailed as nonload bearing. Diaphragms at points of support should be designed as a jacking frame, if needed.

64-5.03(03) Cross-Frame Details

Figure 64-5D illustrates typical cross-frame details. Of the two, the K-frame provides better stiffness and strength.

The *LRFD Specifications* requires that cross-frame transverse connection plates, where used, be welded or bolted to both the tension and compression flanges. Where fatigue requirements permit, the plates may be welded to the flanges in the tension and reversal regions. If the fatigue stress range is too high, consider relocating the stiffener to a less-stressed area or increase the thickness of the flange. The bolted connection shown in Figure 64-5E should be used only as a last consideration. A welded connection costs approximately one tenth of that of a bolted connection. There is no justification to bolt the connection plate if welding is not detrimental to the fatigue life of the structure. Also, the connection plate welds to the flanges should be designed to transfer the cross-frame forces into the flanges.

Connection plates should be fillet welded on the near side and far side to flanges which are always in compression. The flange welds should be in accordance with the details shown in Figure 64-5F.

The width of a connection plate should be not less than 4 in. Where the connection plate also acts as a transverse stiffener, it should be in accordance with *LRFD* Article 6.10.11.1.

64-5.04 Jacking

Reference: Article 3.4.3

The proper interpretation of the *LRFD Specifications* is that the plans should indicate designated points of jacking and whether or not the structure is capable of resisting 1.3 times the dead load reactions at those points. A slender beam may require web stiffeners at the jacking point. Such stiffeners may either be shown on the construction plans or fastened to the girder if jacking is required. Jacking frames will not be required at the supports unless there is insufficient clearance between the bottom of beam and top of cap to place a jack. If insufficient clearance is provided for the jack, the designer must decide whether the jack can be supported by means of temporary falsework. If temporary falsework is not feasible, a jacking frame should be provided, or the cap widened and the bearings placed on pedestals to provide sufficient space for a jack to be placed under the beam. Other locations where jacking may be required are as follows:

1. at supports under expansion joints where joint leakage could deteriorate the girder bearing areas; or
2. at large displacement expansion bearings where deformation-induced wear-and-tear is possible.

If no jacking frame is provided, the cross-frame at the support still must be capable of transferring lateral wind forces to the bearings. For a continuous structure with integral end bents, providing jacking frames at interior supports should not be considered.

64-5.05 Lateral Bracing

Reference: Article 6.7.5

Lateral bracing should be eliminated where practical. For a tangent bridge with a deck that is composite with the beams, no lateral bracing will be required for spans less than 150 ft. Two measures which may eliminate lateral bracing for straight I-beams are to reduce cross-frame spacing and increase the flange width.

The *LRFD Specifications* requires that the need for lateral bracing be investigated for all stages of assumed construction procedures and, if the bracing is included in the structural model used to determine force effects, it should be designed for all applicable limit states.

LRFD Specifications Article 4.6.2.7 provides for various alternatives relative to lateral wind distribution in a multi-beam bridge.

64-5.06 Shims

Shims are to be included.

64-6.0 I-SECTIONS IN FLEXURE

Reference: Article 6.10

64-6.01 General

64-6.01(01) Negative Flexural Deck Reinforcement

Reference: Article 6.10.1.7

LRFD Specifications Article 6.10.1.7 requires that, in the negative dead-plus-live-load moment area, and not just between points of dead load contraflexure, the total cross-sectional area of the longitudinal steel should not be less than 1% of the total cross-sectional area of the deck slab (excluding the 0.5-in. sacrificial wearing surface). However, the designer should also ensure that sufficient negative-moment steel is provided for the applied loads. The maximum bar spacing is 6 in. within each row. The maximum bar size is #6. The requirements relative to placing the longitudinal steel should be interpreted according to Figure 64-6A. The requirements, as

specified in *LRFD* Article 9.7.2.5, for placing the transverse reinforcement on top should be followed.

The empirical-deck design requires 0.18 in^2/ft of top layer longitudinal steel, placed under the transverse layer. There is a slight loss in effectiveness over the interior (beam) supports caused by placing the longitudinal steel in the second layer. This can be compensated by placing all the additional steel required to reach 1% in the top layer, rather than placing some in the lower layer. This enhances resistance both at cracking and at ultimate. Figure 64-6A shows a steel placement which can be summarized as follows:

*Deck Top Steel:	#4 @ 1'-0" c/c=	0.20 in.^{2}/ft
*Additional Top Steel:	#6 @ 1'-0" c/c=	0.44 in.^{2}/ft
Deck Bottom Steel:	#4 @ 6 in. c/c =	0.40 in.^{2}/ft
		1.04 in.^{2}/ft

**The top steel should be at least two-thirds of the total steel required.*

This exceeds the minimum requirement of 0.87 in.^{2}/ft (1% minimum criteria).

64-6.01(02) Stiffness in Negative-Moment Areas

Reference: Article 6.10.1.5

LRFD Specifications Article 6.10.1.5 permits assuming uncracked concrete in the negative-moment areas for member stiffness. This is used to obtain continuity moments due to live load, future wearing surface, and barrier weights placed on the composite section.

The transformed-section properties should be calculated based upon three times the modular ratio for composite dead loads (railing, future wearing surface, utilities, etc.), and one times the modular ratio for composite live loads.

64-6.02 Strength-Limit States

Reference: Appendix B

Moment redistribution will be permitted for continuous spans of I-section members, if $F_y \leq 70$ ksi and if members satisfy the requirements of *LRFD* Article B6.2.

64-6.03 Service-Limit-State Control of Permanent Deformations

Reference: Article 6.10.4.2

Moment redistribution as described in *LRFD* Appendix B is permitted for the investigation of permanent deformations.

64-6.04 Shear Connectors

Reference: Article 6.10.10

Shear connectors may be welded studs or channels, with a preferred diameter of 7/8 in., and a minimum diameter of 3/4 in. The standard height of shear connectors is 4 in. Shear connectors should have a minimum 2.5-in. concrete cover and should penetrate at least 2 in. above the bottom of deck slab. The minimum longitudinal shear connector pitch is six stud diameters. The maximum such pitch is 2 ft.

The minimum number of studs in a group is two in a single transverse row. The transverse spacing, center to center, of the studs should be not less than four stud diameters. The minimum clear distance between the edge of the beam flange and the edge of the nearest stud should be 1 in. Details and spacing of stud shear connectors should be shown on the plans.

If the structure is skewed 5 deg or less, place the rows of shear connectors perpendicular to the centerline of the roadway. If the skew is greater than 5 deg but less than or equal to 25 deg, place the rows of shear connectors along the skew. If the skew is greater than 25 deg, place the rows of shear connectors perpendicular to the centerline of the roadway, which will be the same as that of the transverse reinforcing steel in the deck.

64-6.05 Stiffeners

Reference: Article 6.10.11

64-6.05(01) Transverse Intermediate Stiffeners

Reference: Article 6.10.11.1

A straight girder may be designed without intermediate transverse stiffeners, if economical, or with intermediate transverse stiffeners placed on one side of the web plate. Due to the labor intensity of welding stiffeners to the web, the unit cost of stiffeners by weight is approximately nine times that of the web. It is seldom economical to use the thinnest web plate permitted.

Therefore, the use of a thicker web and fewer intermediate transverse stiffeners, or no intermediate stiffeners, should be investigated.

Intermediate transverse stiffeners should be welded near side and far side to the compression flange. Use a tight fit for the tension flange including stress-reversal areas. This exceeds the requirements of *LRFD*. See Figure 64-6B for details. Transverse stiffeners, except at diaphragm or cross-frame connections, should be placed on only one side of the web. The width of the projecting stiffener element, moment of inertia of the transverse stiffener, and stiffener area should be in accordance with *LRFD* Article 6.10.11.1.2.

Longitudinal stiffeners used in conjunction with transverse stiffeners on a longer span with deeper webs should be placed on the opposite side of the web from the transverse stiffener. Where this is not practical, e.g., at an intersection with cross-frame connection plates, the longitudinal stiffener should not be interrupted for the transverse stiffener.

64-6.05(02) Bearing Stiffeners

Reference: Article 6.10.11.2

Bearing stiffeners are required at the bearing points of each rolled beam or plate girder. Bearing stiffeners at integral end bents may be designed for dead load only. Design the stiffeners as columns and extend the stiffeners to the outer edges of the bottom flange plate. The weld connecting the stiffener to the web should be designed to transmit the full bearing force from the stiffener to the web due to the factored loads. The bearing stiffeners may be either milled to fit against the flange through which they receive their reaction or welded to the flange with full penetration groove welds. See Figure 64-6C for details.

64-6.06 Cover Plates

Reference: Article 6.10.12

Cover plates will not be permitted for a new bridge. However, they will be permitted for a bridge to be rehabilitated.

LRFD Specifications Article 6.10.12.1 requires that partial-length cover plates should not be used with flange plates whose thickness exceeds 3/4 in. in a non-redundant-load-path structure. According to *LRFD* Article 1.3.4, those elements and components whose failure is not expected to cause collapse of the bridge should be designated as not failure-critical, and the associated structural system as redundant. The thickness of a single cover plate should not exceed twice the thickness of the flange plate. Multiple cover plates should not be used. The width of the cover

plate should be different from that of the flange plate to allow proper placement of the weld. The ends of partial-length cover plates should be terminated with a bolted connection according to *LRFD* Article 6.10.12.2.3.

64-6.07 Constructability

Reference: Article 6.10.3

Wind load, before the deck is placed, is transmitted to the piers by the structure acting as a lateral beam. Because the diaphragms or cross-frames are present, the girders equally share the wind load. Normally, the structure can sustain this wind load without overstress.

LRFD Article 6.10.3 and its commentary provide additional information regarding constructability of a steel I-girder bridge.

64-6.08 Inelastic Analysis Procedures

Reference: Article 6.10.10

Since computer programs are required to utilize these methods efficiently, the inelastic analysis procedures should not be used until adequate software becomes available.

64-7.0 BOX SECTIONS IN FLEXURE

Reference: Article 6.11

The *LRFD Specifications* is generally complete, and addresses in detail most aspects of steel box girder design, fabrication, inspection, and maintenance. However, additional designing and detailing issues to be considered are described below.

Due to the high torsional rigidity and resistance associated with a closed section, the box girder is particularly suitable for a curved bridge in which torsional moments resulting from curvature may be high. Under the action of dead loads, analyze and design the steel section as an open section unless the webs are connected across the top of the box section. Either a steel flange plate across the top or a top lateral bracing system will enable the section to be designed as a closed box. The top lateral bracing should be designed to resist force effects caused by the dead load torsional moments. Analyze and design the section as a closed section by using the deck slab as the top member when considering live load and superimposed dead loads. Stresses due to flexure and torsion should be combined in the design.

An uplift force may occur at one of the two bearings of an individual box, especially where the bearings are skewed to the centerline of the box or where the spans are curved. A separate investigation should be made to determine if uplift does occur.

A wide box sometimes has thin bottom flanges in the tension region resulting in a visible deflection in the transverse direction due to the weight of the plates. If the deflection affects the appearance of the bridge, it may be reduced to an acceptable limit by transversely stiffening the plate.

Stay-in-place forms are used inside a steel box due to the difficulty of removing forms. Standard stay-in-place forms, however, have a limiting span length which may be exceeded in a wide box. For this situation, the plans should provide for an intermediate support. The intermediate support is at the option of the contractor and need not be detailed. However, an optional diaphragm to carry the reaction of the intermediate form support should be designed and shown on the plans.

See Chapter Fifty-nine for additional guidance on steel box sections.

64-8.0 CONNECTIONS AND SPLICES

Reference: Article 6.13

64-8.01 Bolted Connections

Reference: Article 6.13.2

The following applies to bolted connections.

1. Type. Use high-strength bolts utilize their advantage in fatigue. See *LRFD Specifications* Article 6.4.3. For unpainted weathering steel, ASTM A 325 Type 3 bolts should be used. For other than weathering steel, A 325 Type 1 bolts should be used. For an exceptionally large structure, A 490 bolts may be used.

2. Design. A bolted connection should be designed as slip-critical, except for that in a secondary bracing member.

3. Slip Resistance. *LRFD Specifications* Table 6.13.2.8-3 provides values for the surface condition, K_s. Use Class A or B surface condition for the design of a slip-critical connection.

For a Class B surface, the contract documents should specify that joints having painted faying surfaces be blast cleaned and coated with a paint which has qualified by test as a Class B coating.

64-8.02 Welded Connections

Reference: Article 6.13.3

The governing specifications, AASHTO *LRFD* and AREMA, used for bridge design and construction, specify fatigue requirements and weld details. However, both refer to the American Welding Society (AWS) structural welding code for joints and other related weld details. The AWS code details qualified joints and provides specifications for qualified joints and qualified welders. Qualified joints should be indicated and referenced.

AWS publishes a series of welding handbooks which are updated annually and are excellent references. The Lincoln Electric Company also publishes handbooks and literature. With this literature available, it is unnecessary to show details of joints, filler material requirements, and welding processes.

Figure 64-8A illustrates the standard location of information shown on welding symbols. Figure 64-8B illustrates the arc- and gas-welding symbols. Figure 64-8C illustrates the symbols used in welded construction. Only the type and size of weld required should be shown.

The following requirements apply to welding.

1. Lamellar Tearing. This occurs during welding on the through thickness of the material. Figure 64-8D illustrates details susceptible to lamellar tearing and improved details which reduce its possibility. Lamellar tearing is caused by strain that accumulates in a small area due to shrinkage of heavy welding and can be controlled by means of attention to the joint welding detail.

2. Accessibility. Provide accessibility to welded joints. Provide sufficient clearance to enable a welding rod to be placed at the joint. Often, a large-scale sketch or an isometric drawing of the joint will reveal difficulties in welding or where critical weld stresses must be investigated.

3. Minimum Fillet Weld. The weld should be designed economically, but its size should not be less than 1/4 in., and not less than that shown in *LRFD* Article 6.13.3.4 for the thicker of the two parts joined.

4. Field Welding. Field welding is prohibited for all splices.

5. Intersecting Welds. These should be avoided. There should be a gap equal to four times the web thickness, $4t_w$, or 2 in., whichever is larger, between vertical and horizontal welds.

   A bridge that includes intersecting vertical and horizontal welds or that has gaps of less than $4t_w$ or 2 in. is prone to fatigue cracks. The bridge inspector should determine if a steel bridge includes such welds. If it does, it should be indicated in the bridge inspection report. The Planning Division's bridge inspection engineer should be notified in writing.

6. Intermittent Fillet Welds. These are prohibited.

7. Partial-Penetration Groove Welds. These are prohibited except as permitted in *LRFD* Article 9.8.3.7.2.

64-8.03 Splices

Reference: Article 6.13.6

The *LRFD Specifications* have been revised with regard to the design of bolted field splices as follows:

1. to ensure a more consistent interpretation for the design of splices in flexural members at all limit states;
2. to better-handle the design of splices for composite flexural members, especially in areas of stress reversal;
3. to provide a more consistent and reasonable design shear for splices in flexural members; and
4. to better determine the effective flange area to be used for flexural members with holes.

In addition to the requirements of *LRFD* Article 6.13.6, the following will apply.

1. Location. Field splices should be located at low-stress areas and near the points of dead-load contraflexure for continuous spans. Numerous butt welds or butt welds located in high-stress regions are not desirable. The location of shop butt splices is normally dependent upon the length of plate available to the fabricator. This length varies depending upon the rolling process. The maximum length of normalized and quenched and tempered plates is 50 ft. Other plates can be obtained in lengths greater than 80 ft depending on thickness. The cost of adding a shop-welded splice instead of extending a

thicker plate should be considered when designing members. Discussion with a fabricator or the NSBA during the design is suggested.

2. Field Splices. For a girder longer than 100 ft, additional field splices may need to be shown on the plans.

3. Swept Width. For a curved girder, the swept width between splices should be limited to 10 ft to accommodate the shipment of the steel.

4. Bolts. Bolt loads should be calculated by means of an elastic analysis method. Provide not less than two lines of bolts on each side of the joint for both the web and flange splice.

5. Composite Girder. If a composite girder is spliced at a section where the moment can be resisted without composite action, the splice may be designed as noncomposite. If composite action is necessary to resist the loads, the splice should be designed for the forces due to composite action. The splice design forces should be computed as a multiple, *K*, of the forces due to factored loads. *K* should be the larger of the expressions as follows:

$$\frac{f_n + f_y}{2f_n} \qquad \text{(Equation 64-8.1)}$$

$$\frac{0.75f_y}{f_n} \qquad \text{(Equation 64-8.2)}$$

Where f_n = average flange stress due to factored loads of the most highly-stressed flange

6. Top-of-Field-Splice Elevations. A table showing the erection elevation of the top-flange splice plate should be provided for all field splices. This elevation is determined by the following:

(Top of slab elevation immediately above centerline splice) – (distance from top of slab to top of splice plate) + (concrete and superimposed dead-load deflection at the splice)

The table will allow the erector to position the girder sections properly at the time of erection to maintain the vertical alignment.

7. Transportation. The shipment of steel beams is subject to the Department's publication, *Regulations Pertaining to the Movement of Over-Length Concrete and Steel Beams on*

State Highways, adopted December 7, 1961. The shop drawings must indicate which splices the contractor intends to eliminate and whether the beam or girder will be shipped by rail or on State highways.

8. Design. A bolted splice must be slip-critical under Service II loads and must be designed as a bearing-type connection under strength-limit states.

9. Welded Splice. Figure 64-8E illustrates welded-splice details. See *LRFD* Article 6.13.6.2 for more information regarding splicing different widths of material using butt welds.

64-9.0 DESIGN EXAMPLES

Examples for design of steel-beam superstructures can be found in publications such as of *Design of Highway Bridges Based on AASHTO LRFD Bridge Design Specifications*, Chapter Eight; and *Highway Structures Design Handbook*, 2nd Edition, Volume Two, Chapter 1A, published by the National Steel Bridge Alliance, which is a design guide on the use of the AASHTO *LRFD Bridge Design Specifications*. Four composite tangent steel-bridge-girder design examples have been prepared using the AASHTO *LRFD Bridge Design Specifications*. An online design example may be found at the AASHTO website. The domain is as follows:

http://lrfd.aashtoware.org/?siteid=34&c=downloads

The designer should be aware that some of the information contained in these publications may not agree with the policy included herein or the current AASHTO *LRFD Bridge Design Specifications*.

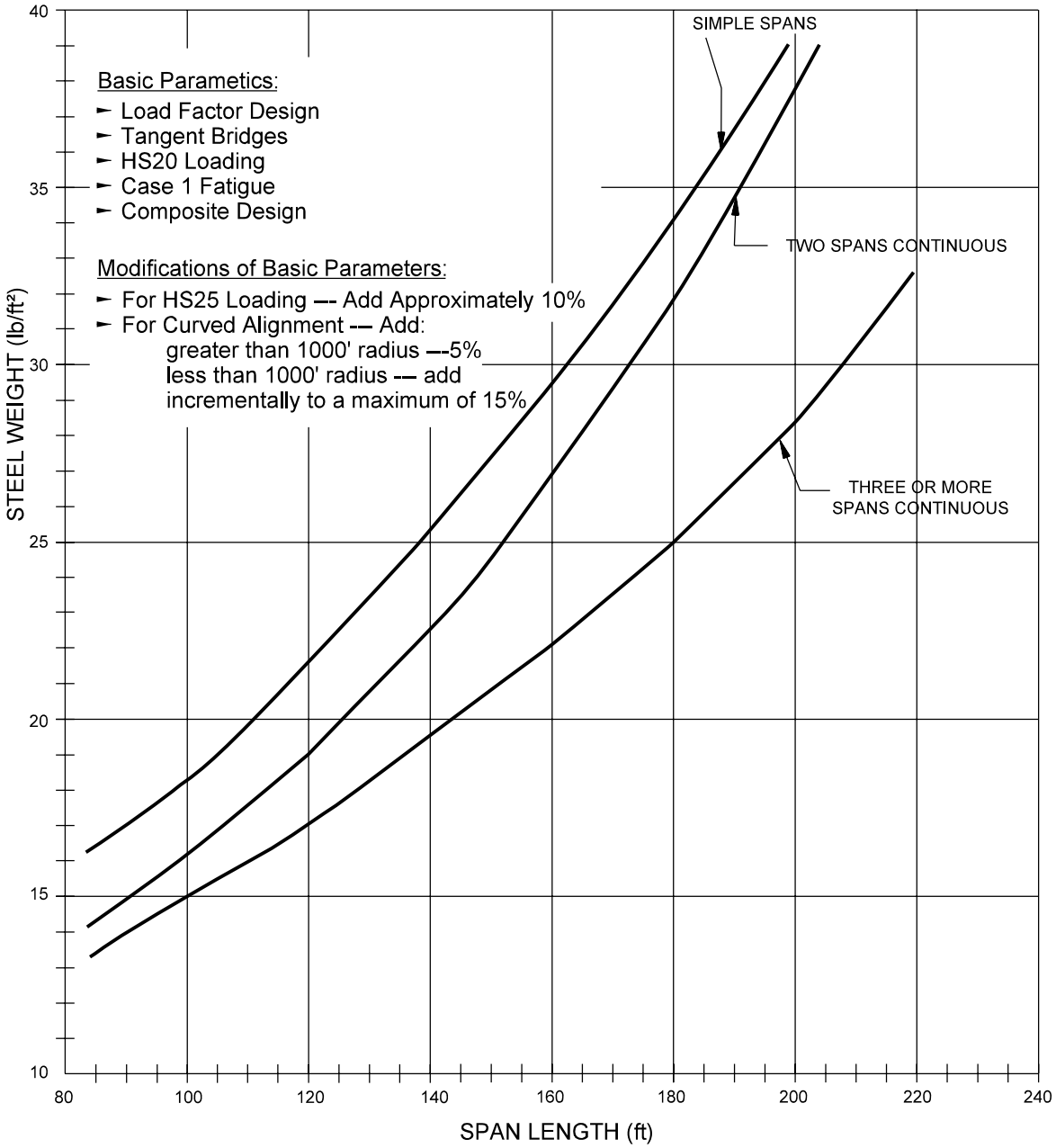

Notes:

1. These curves apply to I girders only.
2. For the curve labeled "Three of More Spans Continuous," a balanced span arrangement is assumed (end span equal to approximately 0.8 of the interior span), and the interior span length should be used with the curve.

STEEL WEIGHT CURVES

Figure 64-1A

< 1 in.	≥ 1 in.
3/16	1 1/8
1/4	1 1/4
5/16	1 3/8
3/8	1 1/2
7/16	1 5/8
1/2	1 3/4
9/16	1 7/8
5/8	2
11/16	2 1/8
3/4	2 1/4
13/16	2 3/8
7/8	2 1/2
1	---

Notes:

1. *For thickness of < 1 in., use 1/16-in. increments.*
2. *For thickness of ≥ 1 in., use 1/8-in. increments.*
3. *Based on ANSI Standard B32.3. Mills can produce a plate size upon request.*

PLATE THICKNESSES

Figure 64-1B

PLATE (FLANGE) WELDING
4 FLANGES, 3 PLATE THICKNESS

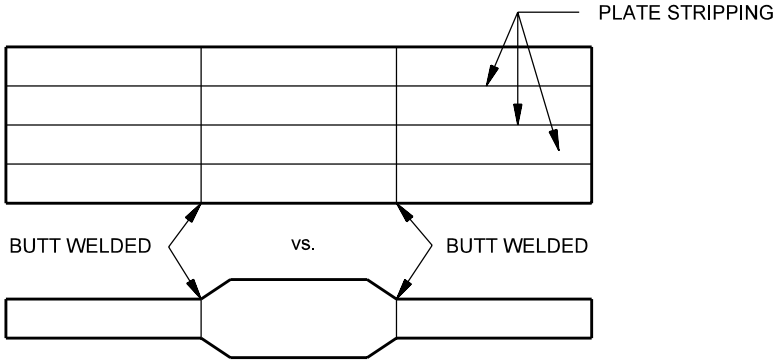

REPEATING PLATE THICKNESS

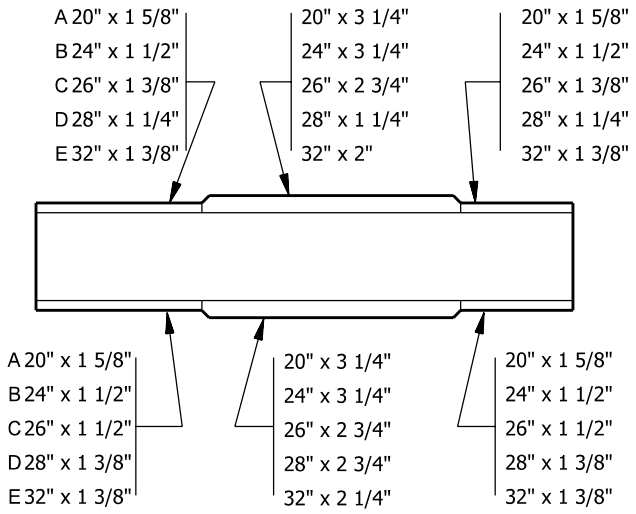

FLANGE TRANSTIONS

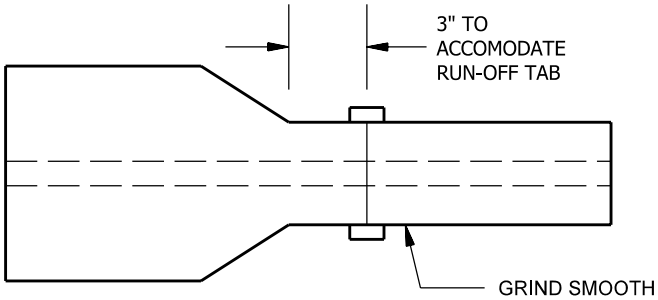

DETAILS FOR FLANGE TRANSITIONS

Figure 64-1C

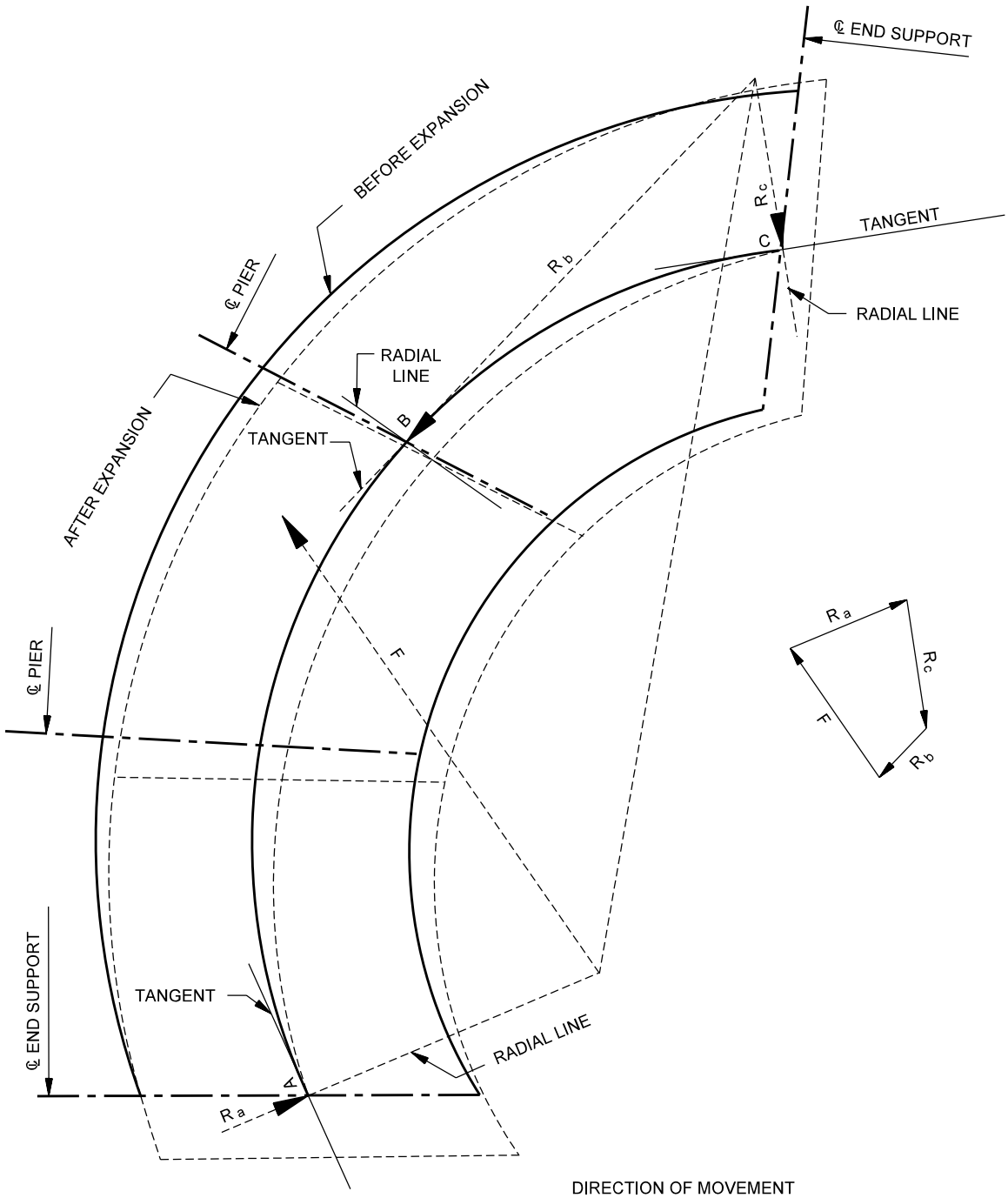

DIRECTION OF MOVEMENT

BEARINGS	LINEAL IN HORIZ. PLANE	ANGULAR IN VERT. PLANE	MOVEMENTS ARRESTED
A & C & ALL OTHERS	TANGENTIAL RADIAL ANY	TANGENTIAL TANGENTIAL ANY	RADIALLY TANGENTIALLY ———

BEARING RESTRAINTS

Figure 64-1D

Facility	Annual Growth Rate
Rural / Urban Freeway	3.07 %
Divided Rural Non-Freeway	1.51 %
Divided Urban Non-Freeway	1.32 %
Undivided Rural Arterial	1.51 %
Rural Collector / Local Road	2.45 %
Undivided Urban Facility	1.32 %

ANNUAL TRAFFIC GROWTH RATE

Figure 64-4A

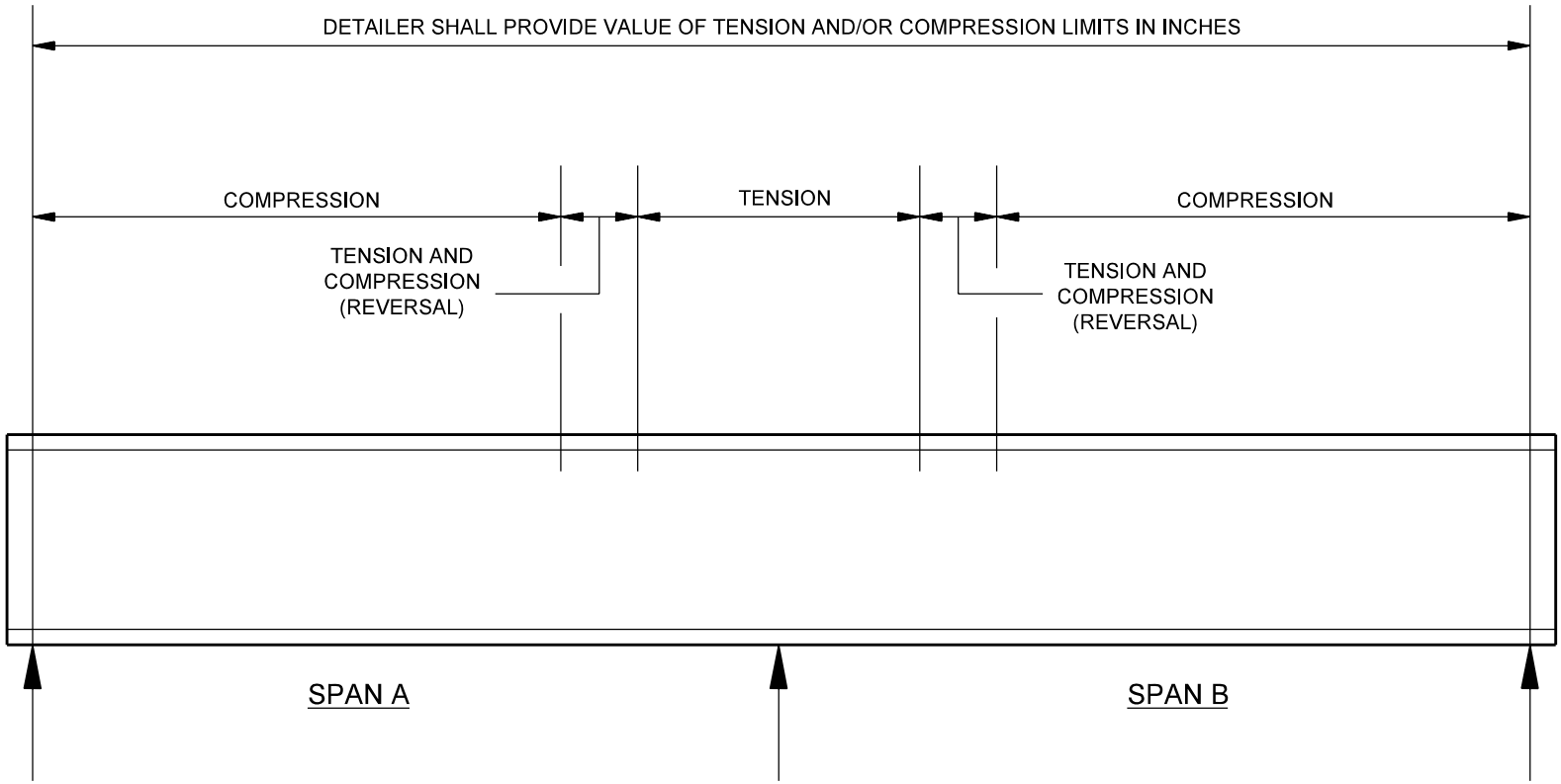

SCHEMATIC OF TOP FLANGE STRESS

Figure 64-4B

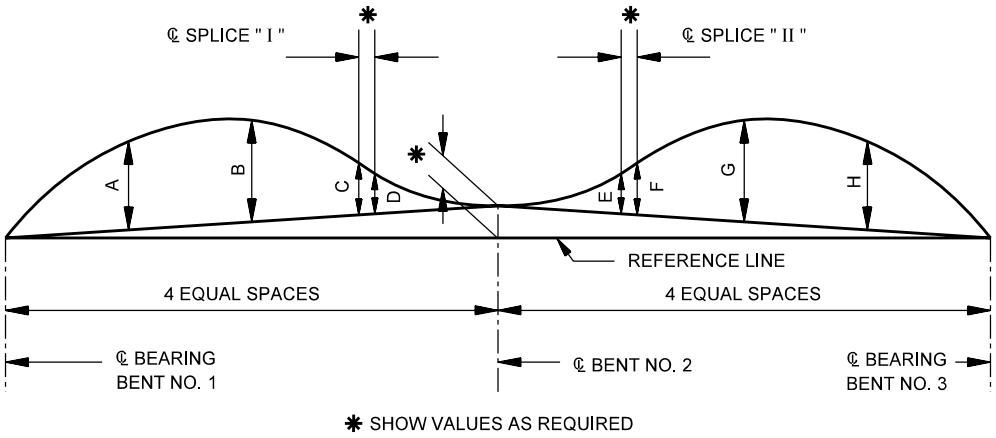

NO LOAD CAMBER AND REAMING DIAGRAM
(SKETCH SHOWN FOR CREST VERTICAL CURVE)

Span Length	Camber Tolerance at Quarter Points and Centerline of Splice					
	Centerline Bearing End Support	¼Point	½Point	Centerline Splice	¾Point	Centerline Bearing Interior Support
≥ 100'	± 0	± 9/16"	± 3/4"	± 1/2"	± 9/16"	± 1/8"
< 100'	± 0	± 5/16"	± 3/8"	± 1/4"	± 5/16"	± 1/8"

TABLE OF CAMBERS											
	℄ BEARING BENT NO. 1	¼ POINT	½POINT	℄ SPLICE " I "	¾POINT	℄ BENT NO. 2	¾POINT	℄ SPLICE " II "	½POINT	¼POINT	℄ BEARING BENT NO. 3
DEAD LOAD - STEEL	0					0					0
DEAD LOAD - DECK	0					0					0
DEAD LOAD - RAILING	0					0					0
SUBTOTAL	0					0					0
VERTICAL CURVE	0					0					0
TOTAL CAMBER	0	A	B	C	D	0	E	F	G	H	0

BEAM CAMBER

Figure 64-5A

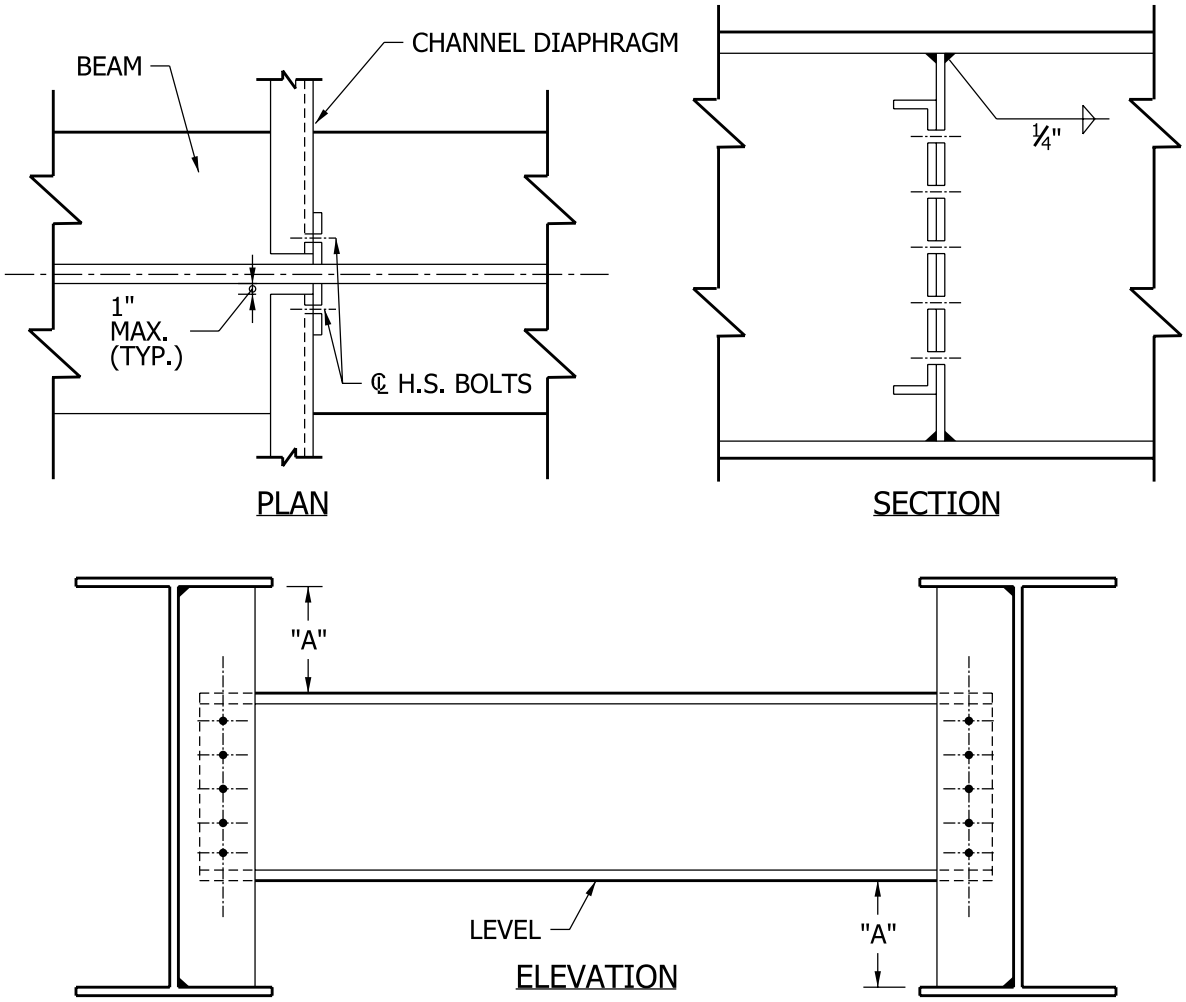

NOTE: "A" DIMENSIONS SHALL BE EQUAL.

Beam	Diaphragm	High-Strength Bolts
W40	MC (18 x 42.7)	(5) 7/8" diameter
W36	MC (18 x 42.7)	(5) 7/8" diameter
W33	MC (18 x 42.7)	(5) 7/8" diameter
W30	C 15 x 33.9	(4) 7/8" diameter
W27	C 15 x 33.9	(4) 7/8" diameter
W24	C 12 x 20.7	(3) 3/4" diameter

TYPICAL INTERMEDIATE DIAPHRAGM CONNECTION

Figure 64-5B

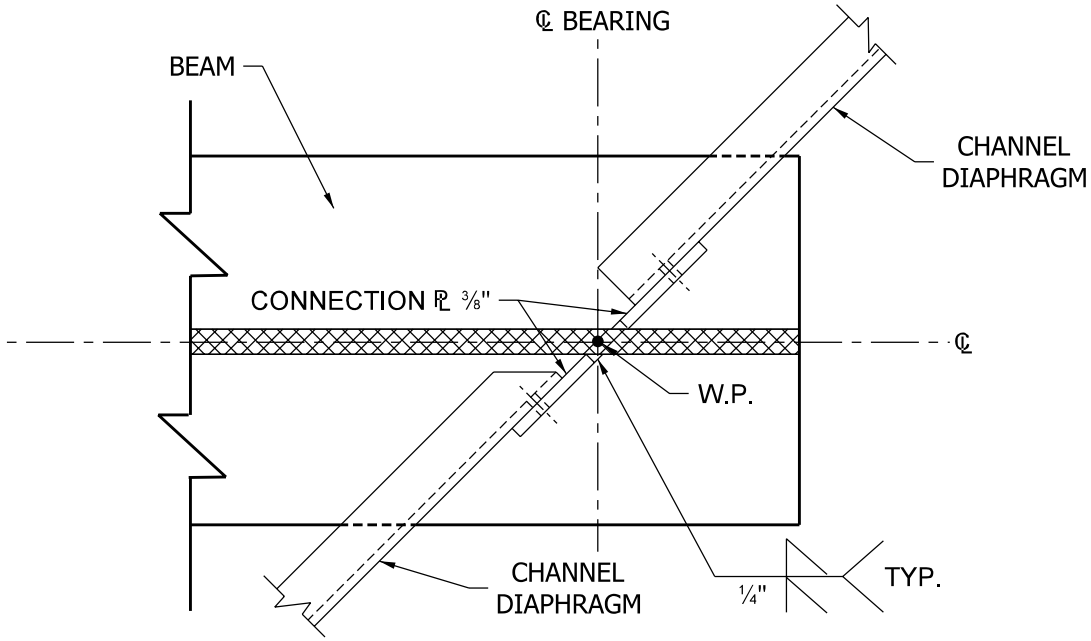

SECTION A-A

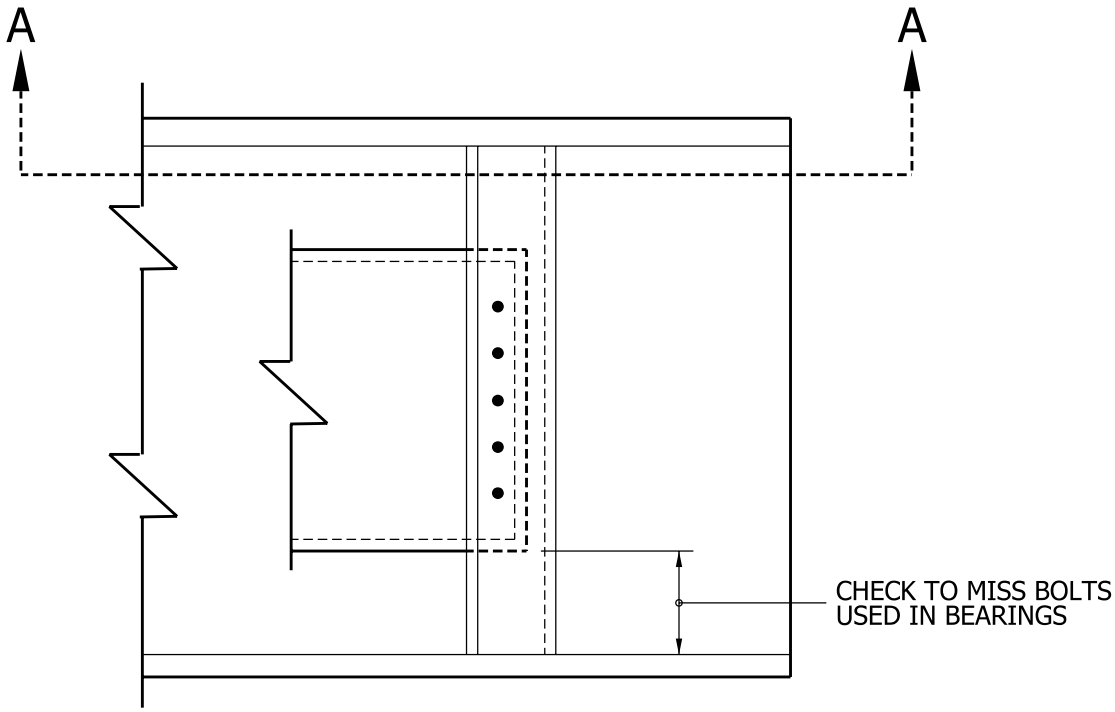

ELEVATION

TYPICAL END DIAPHRAGM CONNECTION

Figure 64-5C

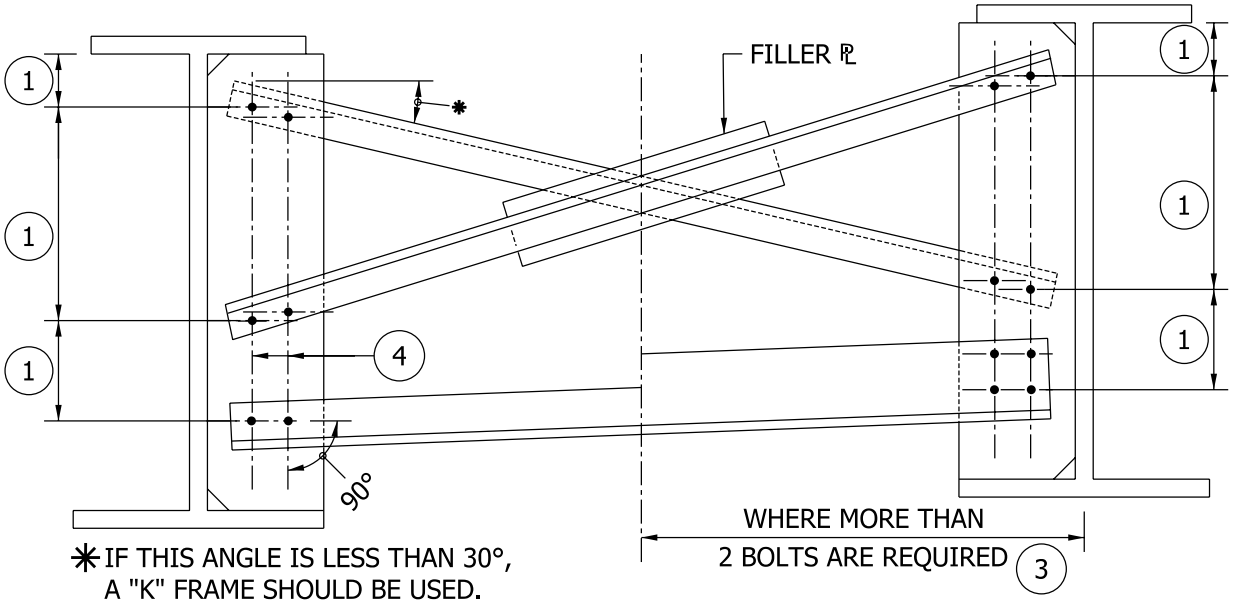

X-FRAME

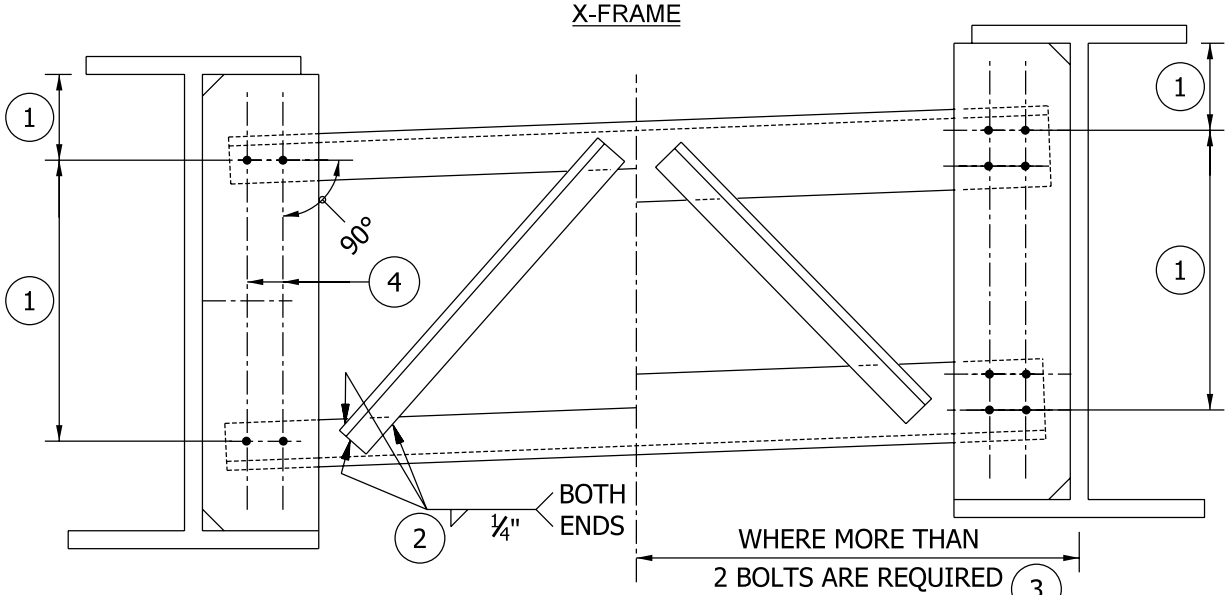

K-FRAME

1. KEEP THESE DIMENSIONS THE SAME AND SLOPE THE STRUTS.
2. KEEP ALL WELDING ON ONE SIDE.
3. INCREASE SIZE OF THE STRUTS AS REQUIRED FOR LOAD.
4. USE OVERSIZED HOLES TO MINIMIZE THE SLOPE OF HOLES IN STRUTS.

TYPICAL CROSS FRAMES

Figure 64-5D

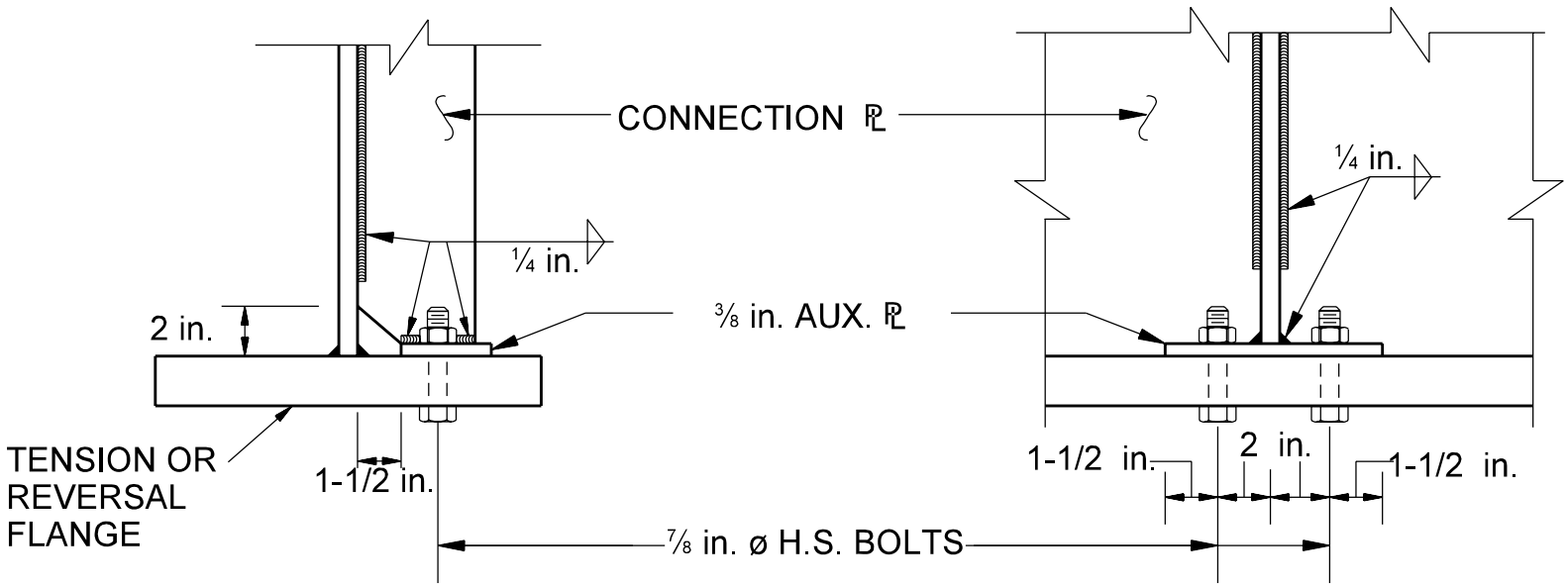

ALTERNATIVE CONNECTION PLATE ATTACHMENT AT
TENSION OR REVERSAL FLANGE

Figure 64-5E

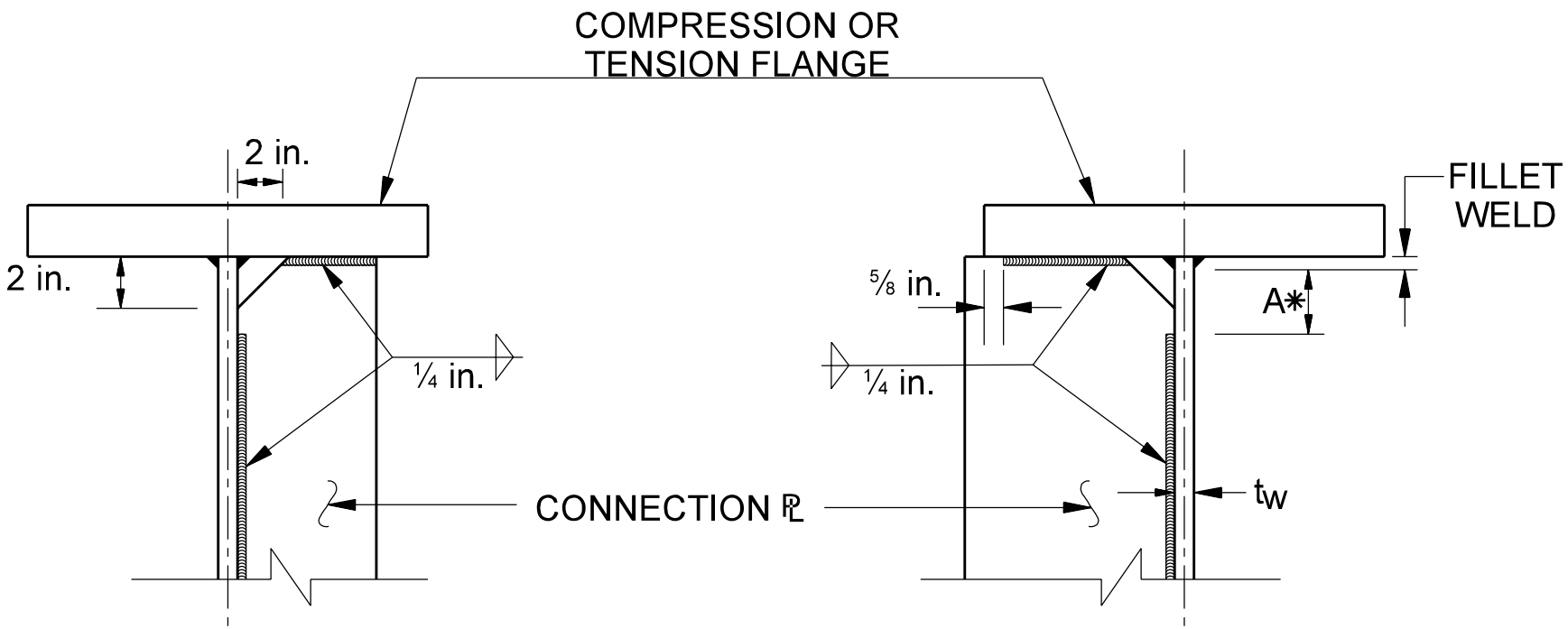

* NOTE: FOR ROLLED BEAMS THE "A" DIMENSION IS TAKEN FROM THE BOTTOM OF FLANGE. $4t_W \angle A \angle 6t_W$.

WELDED CONNECTION PLATE ATTACHMENT
AT COMPRESSION OR TENSION FLANGE

Figure 64-5F

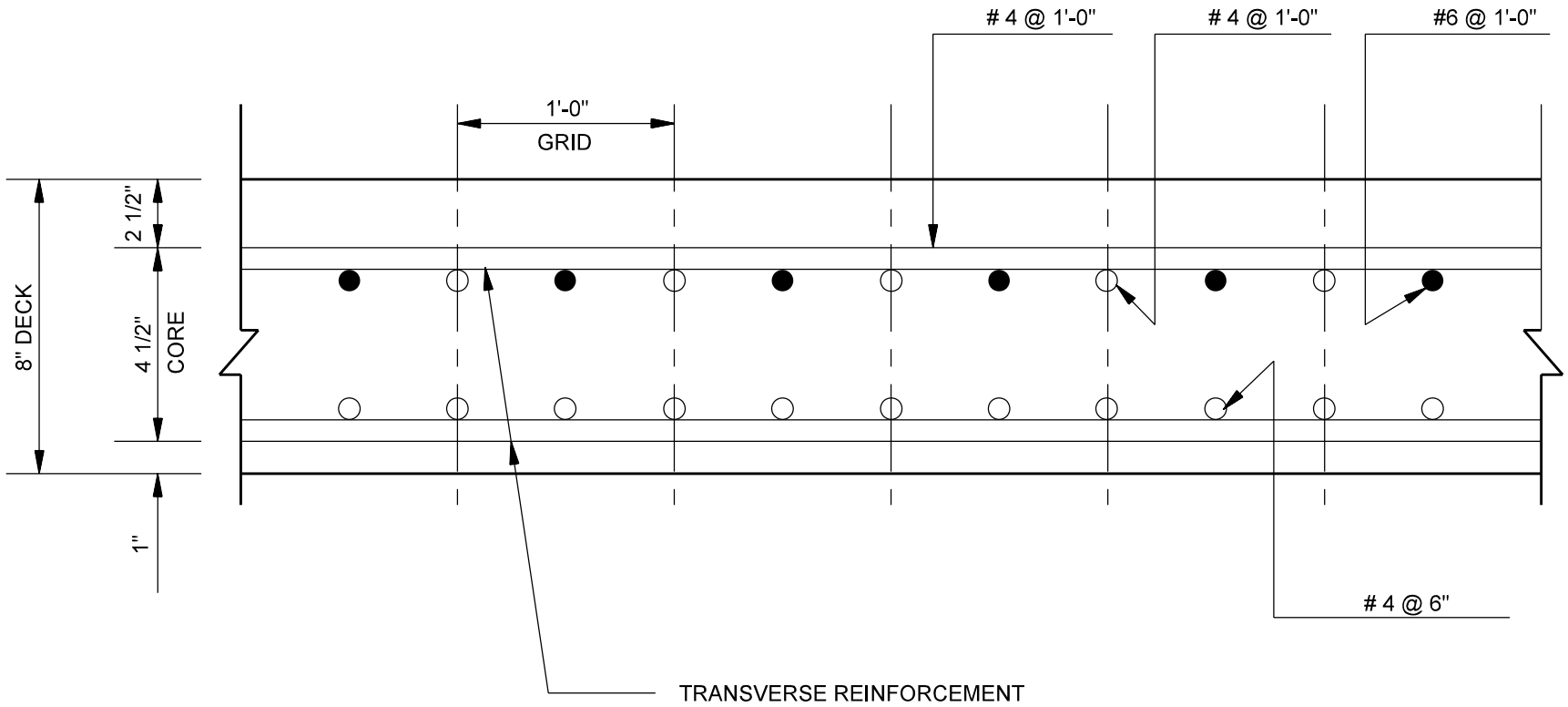

EXAMPLE PLACEMENT OF LONGITUDINAL STEEL
(Negative Flexural Reinforcement)

Figure 64-6A

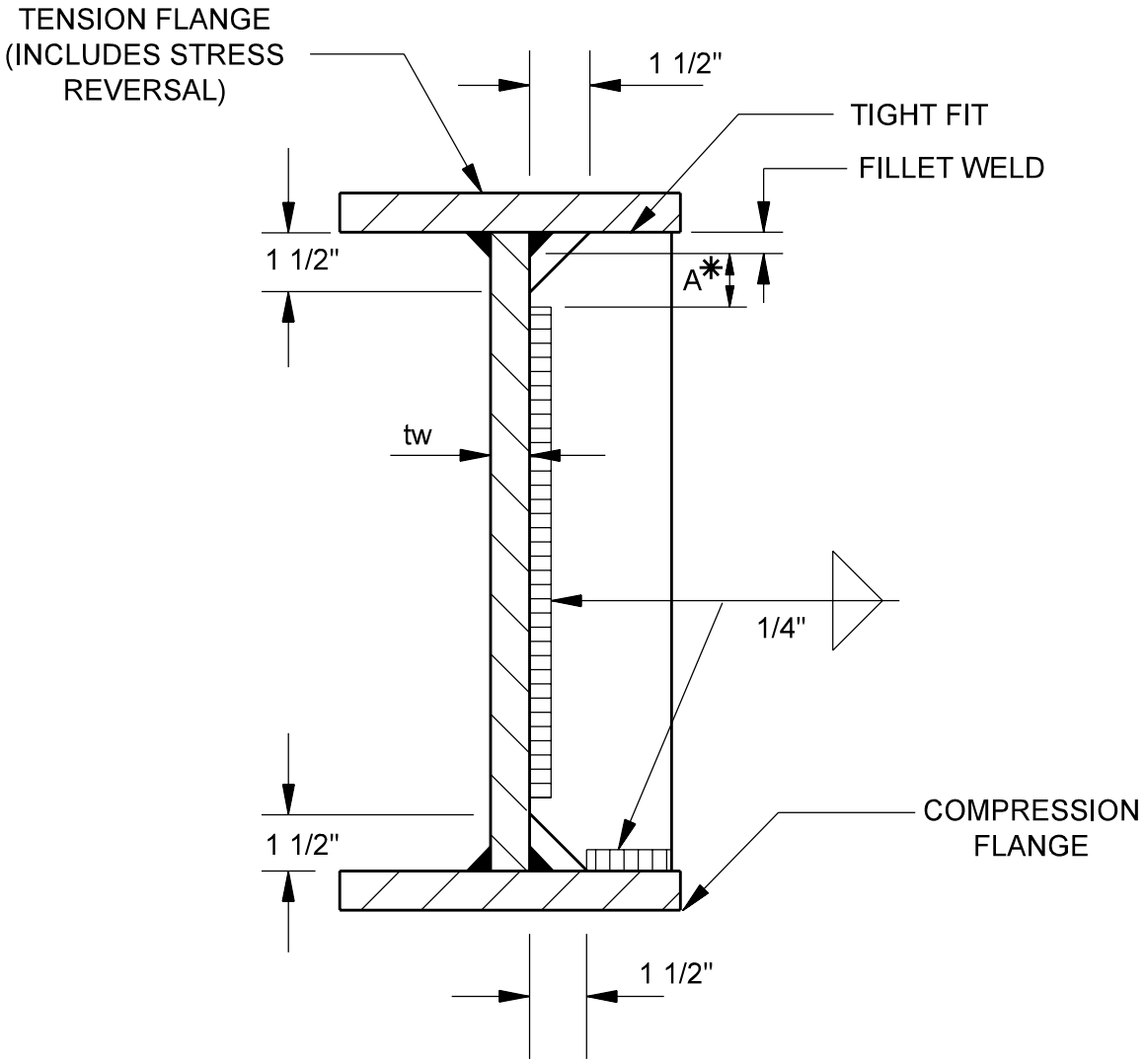

* NOTE: FOR ROLLED BEAMS, THE "A" DIMENSION IS TAKEN FROM THE BOTTOM OF FLANGE.
$4t_w \angle A \angle 6t_w$

TRANSVERSE INTERMEDIATE STIFFENER DETAILS

Figure 64-6B

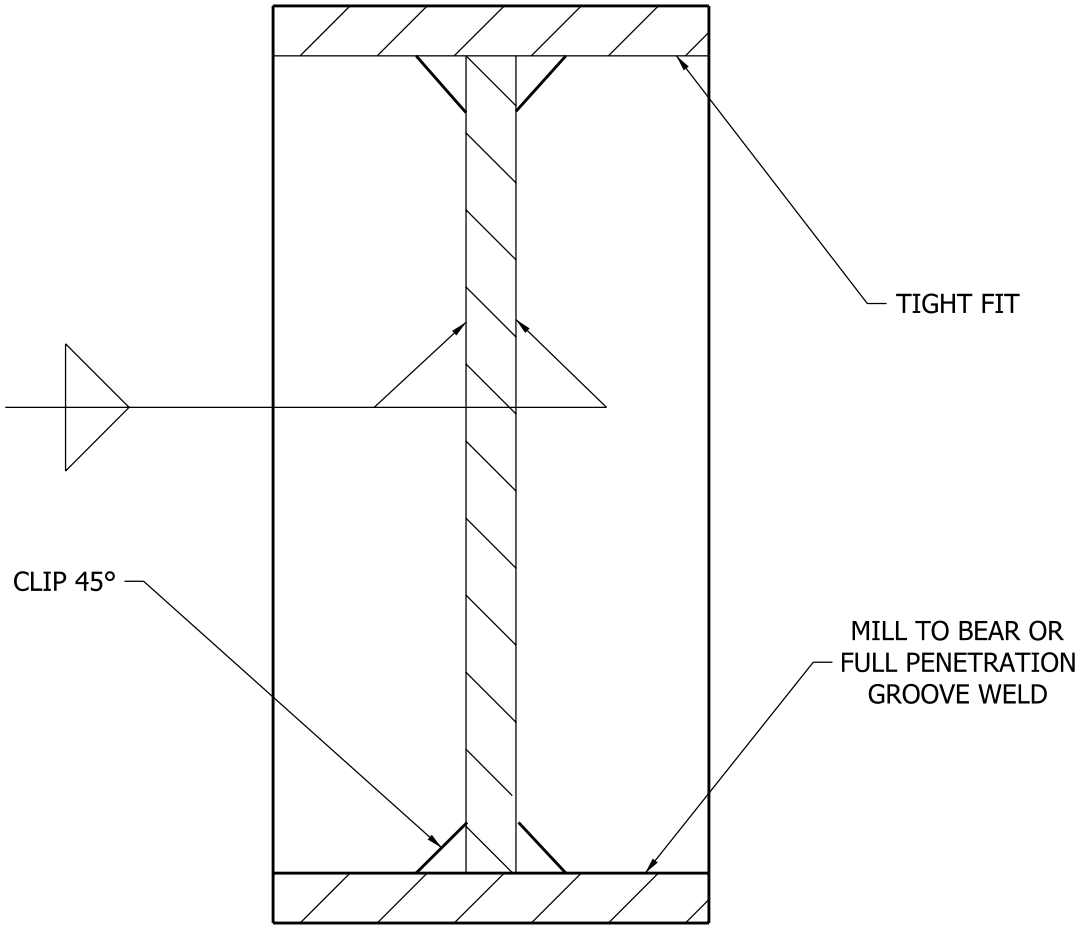

BEARING STIFFENER

Figure 64-6C

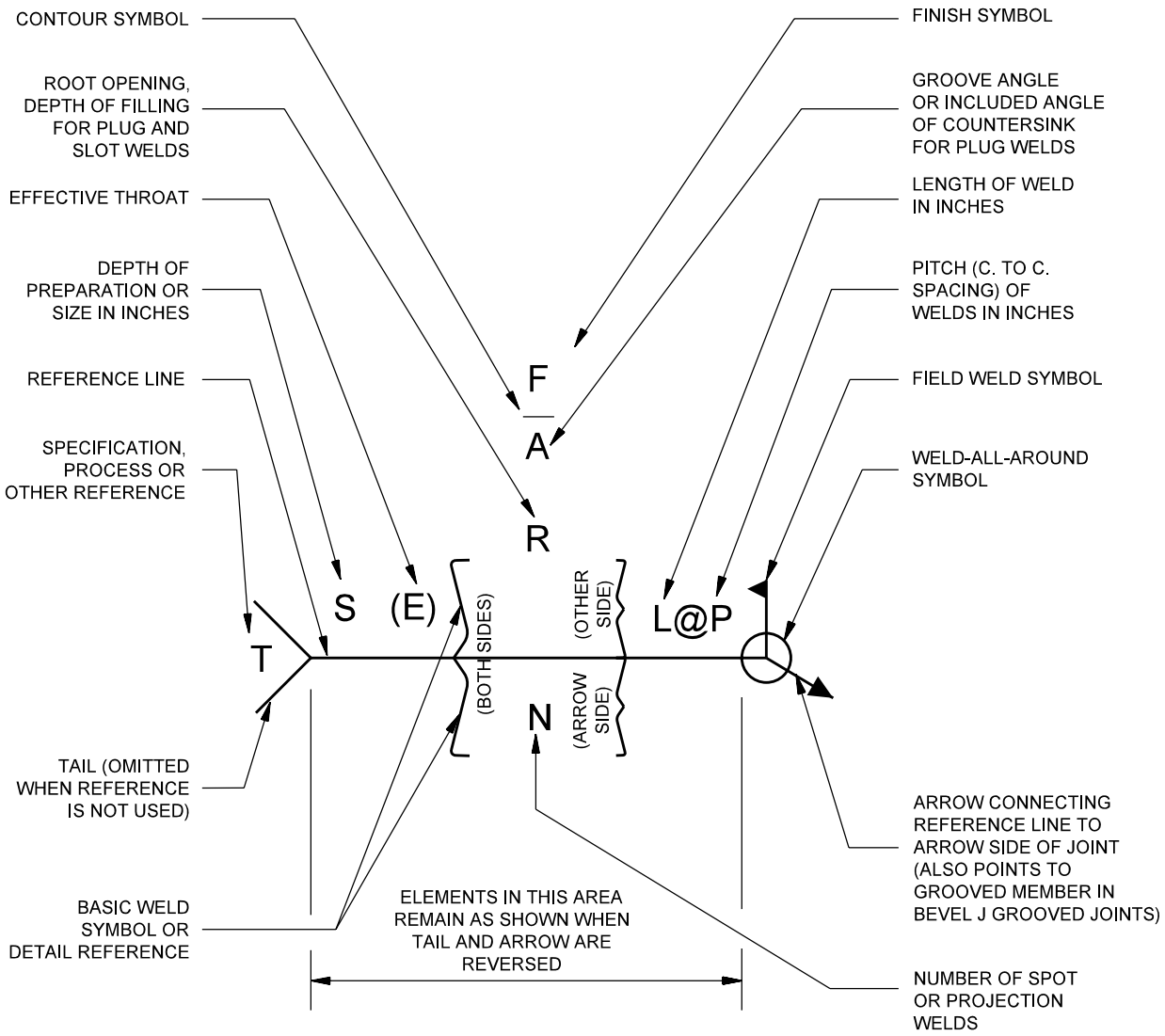

Notes:

1. Size, weld symbol, length of weld and spacing must read in that order from left to right along the reference line. Neither orientation of reference line nor location of the arrow alters this rule.
2. Arrow and other side welds are of the same size unless otherwise shown.
3. Symbols apply between abrupt changes in direction of welding unless governed by the "all-around" symbol or otherwise dimensioned.

WELDING SYMBOLS

Figure 64-8A

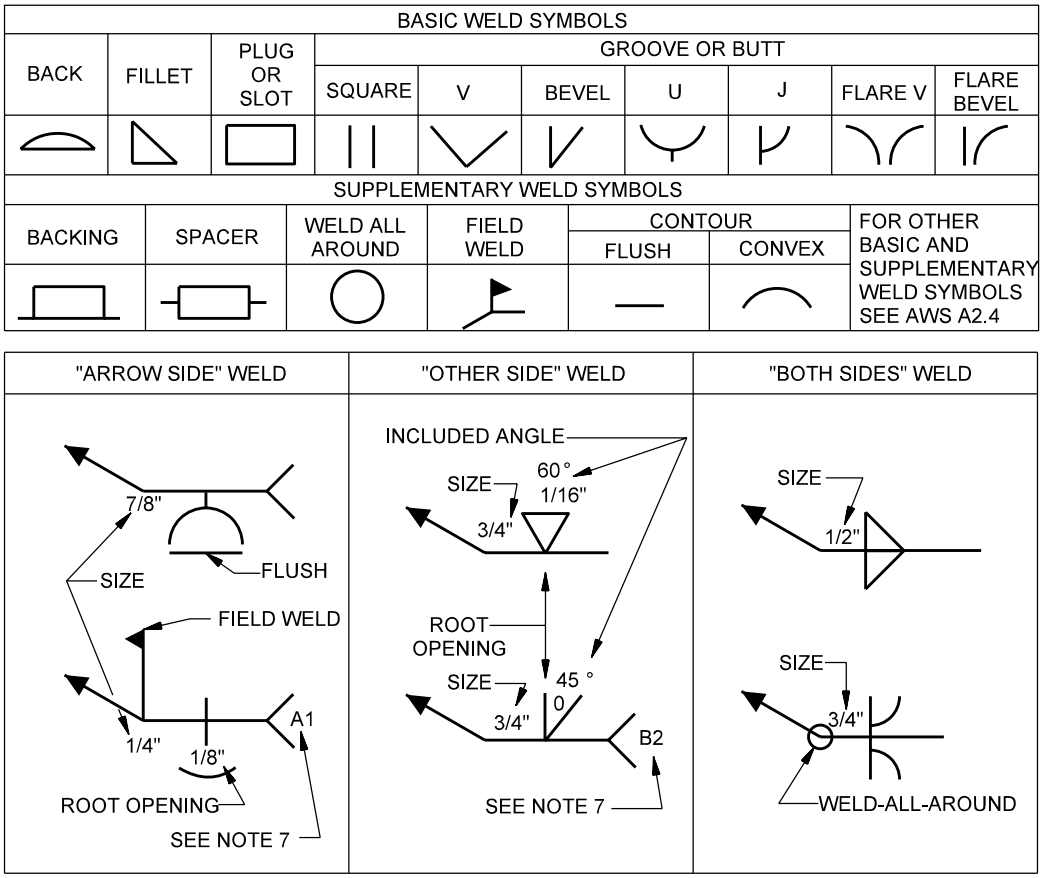

Notes:

1. Welds parallel to the plane of the paper, or nearly so, with faces toward the reader are near welds. Those with faces away from the reader are far welds. Use sufficient views to make the meaning clear.

2. Welds in section or end views with faces toward the arrow are near welds. Those with faces away from the arrow are far welds. Use sufficient arrows to make location clear.

3. Where one member only is to be grooved, arrow points to that member.

4. Near and far welds are same size unless otherwise shown.

5. Symbols apply between abrupt changes in direction of weld or as dimensioned.

6. All welds are continuous and of user's standard proportions, and all except V and bevel groove welds are closed unless otherwise shown.

7. Tail of arrow used for specification reference.

WELDING SYMBOLS

Figure 64-8B

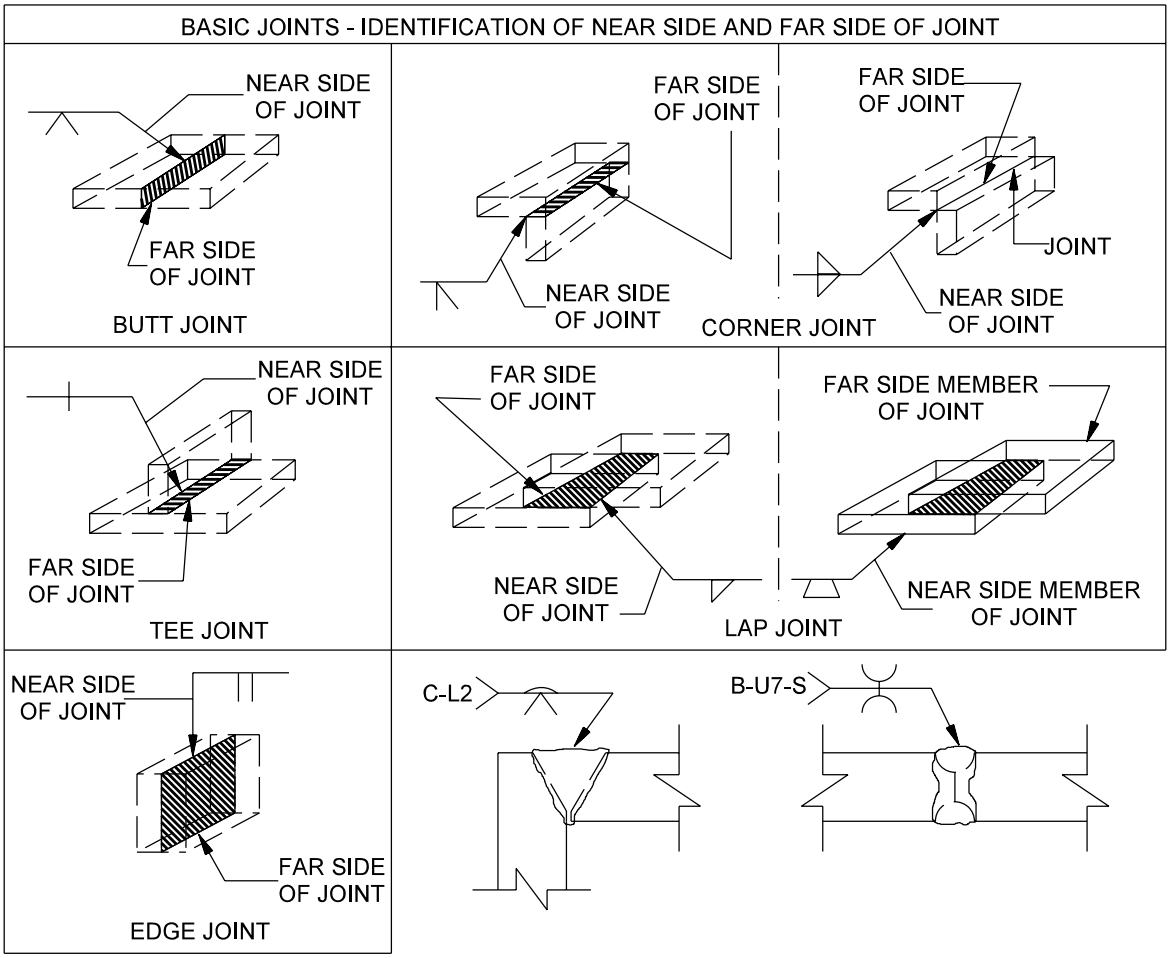

Note: Weld designations such as C-L2, B-P3, B-U7-S, etc., which are those used in the AWS standards, have been classified using the convention as follows:

1. Joint Type
   - B - Butt Joint
   - C - Corner Joint
   - T - Tee Joint
   - BC - Butt or Corner Joint
   - TC - Tee or Corner Joint
   - BTC - Butt, Tee or Corner Joint

2. Material Thickness and Efficiency
   - L - Limited Thickness - complete joint penetration
   - U - Unlimited Thickness - complete joint penetration
   - P - Partial Joint Penetration

3. Weld Type
   - 1 - Square Groove
   - 2 - Single-Vee Groove
   - 3 - Double-Vee Groove
   - 4 - Single-Bevel Groove
   - 5 - Double-Bevel Groove
   - 6 - Single-U Groove
   - 7 - Double-U Groove
   - 8 - Single-J Groove
   - 9 - Double-J Groove

4. Welding Process
   If not manual shielded metal arc:
   - S - Submerged Arc
   - G - Gas Metal Arc
   - F - Flux Cored Arc

WELDING SYMBOLS

Figure 64-8C

JOINTS

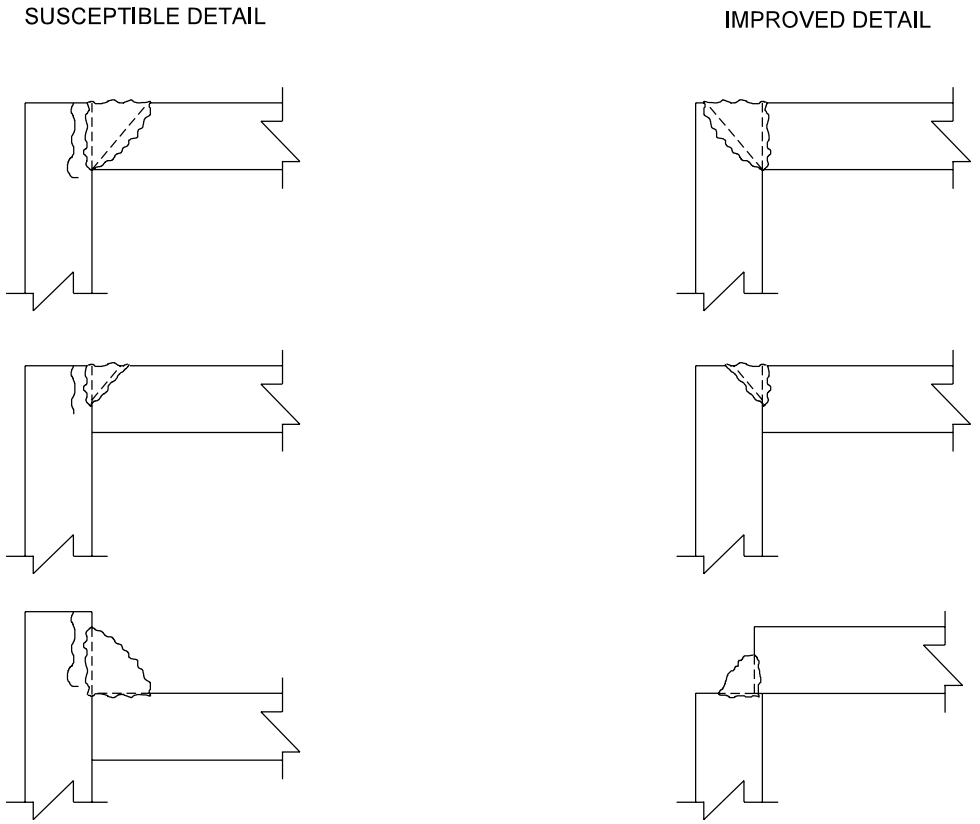

HEAVY WELDMENTS

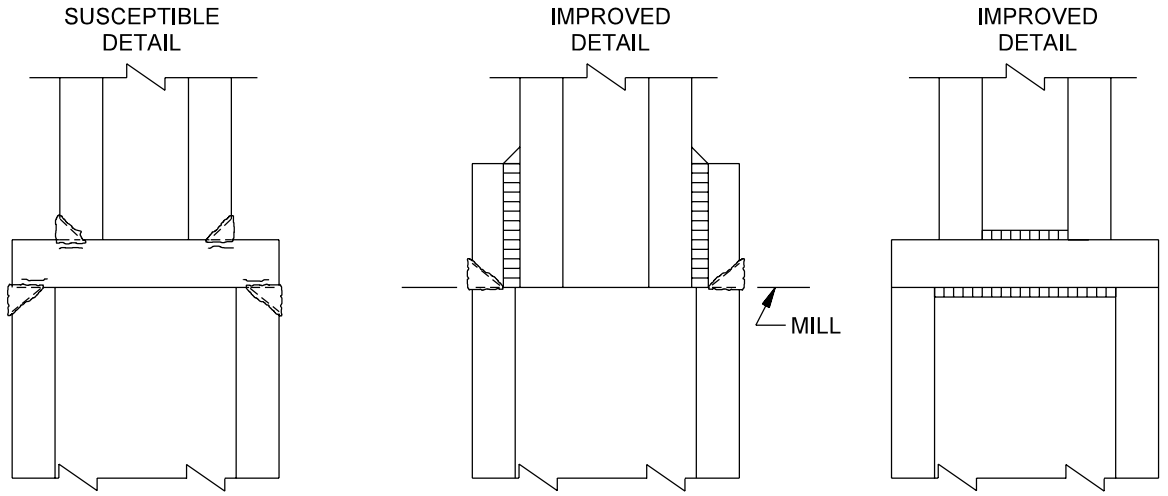

LAMELLAR TEARING

FIGURE 64-8D

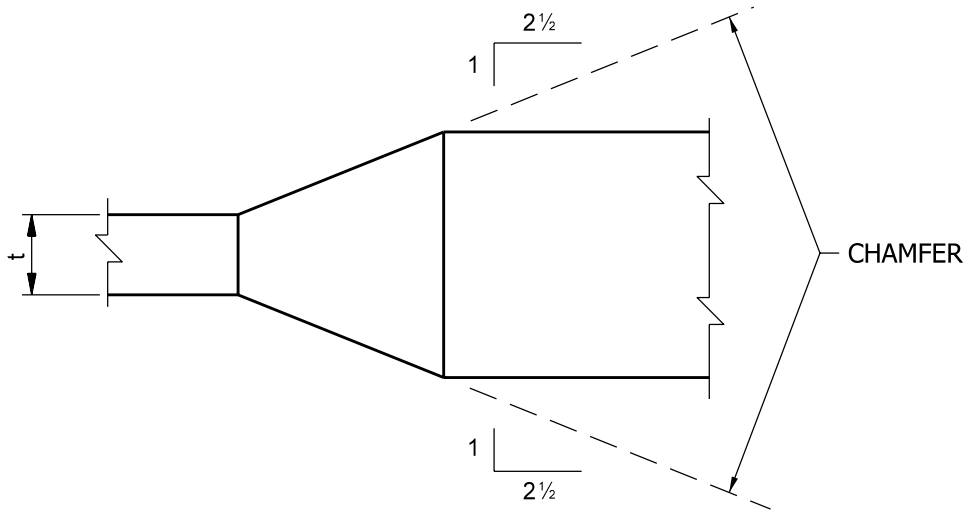

WEB SPLICE DETAILS

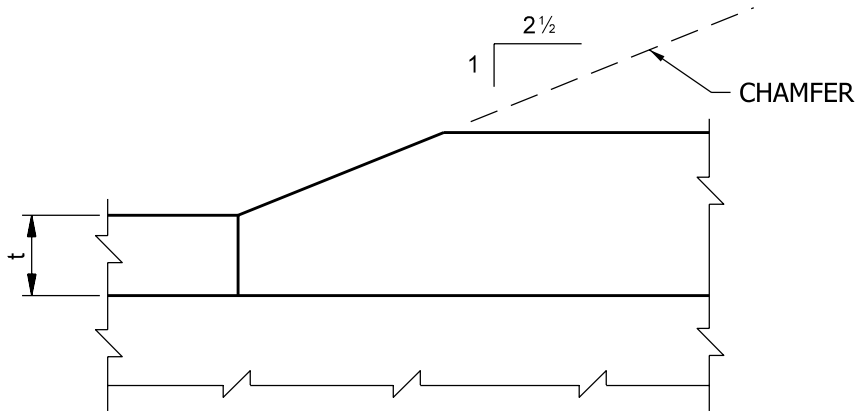

FLANGE SPLICE DETAILS

TYPICAL SUBMERGED ARC WELD DETAILS

Figure 64-8E