TABLE OF CONTENTS

Table of Contents 1

List of Figures 2
60-2A Typical INDOT Dead Loads 2
60-3A Toll Road Loading No.1 (W = 90 kip) 2
60-3B Toll Road Loading No. 2 (W = 90 kip) 2
60-3C Special Toll Road Truck (W = 125 kip) 2
60-3D Indiana Extra Heavy Duty Highway System 2
60-3E Michigan Truck Train No. 5 (W = 135 kip) 2
60-3F Michigan Truck Train No. 8 (W = 135 kip) 2
60-5A Two-Span Continuous Beam (L < 90 ft) 2

Chapter Sixty 3

60-1.0 GENERAL 3
60-1.01 Introduction 3
60-1.02 Non-Technical Issues 4
60-1.03 Limit States 4

60-2.0 PERMANENT LOADS 5
60-2.01 General 5
60-2.02 Uplift 6
60-2.03 Concrete Deck Slab 6
60-2.04 Utilities 6
60-2.05 Dead-Load Values 7
60-2.06 Dead-Load Distribution 7

60-3.0 TRANSIENT LOADS 7
60-3.01 Introduction 7
60-3.02 Vehicular Live Load 7
60-3.02(01) General 7
60-3.02(02) Toll Road and Michigan Design Trucks 8
60-3.02(03) Fatigue Load 9
60-3.03 Centrifugal and Braking Forces, and Wind Pressure on Vehicle 9
60-3.04 Stream Pressure 10
60-3.05 Forces Due to Friction 10
60-3.06 Earthquake Effects 10
60-3.07 Ice Forces on Piers 10
60-3.08 Vehicle or Train Collision with Structure 10
60-3.09 Vessel Collision with Structure 11

60-4.0 ELASTIC STRUCTURAL ANALYSIS 11
60-4.01 General 11
60-4.02 Superimposed Deformations 11

60-5.0 LOAD APPLICATIONS (Two Design Trucks) 12

LIST OF FIGURES

Figure Title

60-2A Typical INDOT Dead Loads
60-3A Toll Road Loading No.1 (W = 90 kip)
60-3B Toll Road Loading No. 2 (W = 90 kip)
60-3C Special Toll Road Truck (W = 125 kip)
60-3D Indiana Extra Heavy Duty Highway System
60-3E Michigan Truck Train No. 5 (W = 135 kip)
60-3F Michigan Truck Train No. 8 (W = 135 kip)
60-5A Two-Span Continuous Beam (L < 90 ft)

CHAPTER SIXTY

LOAD ANALYSIS AND APPLICATION

60-1.0 GENERAL

References shown following section titles are to the AASHTO LRFD *Bridge Design Specifications.*

60-1.01 Introduction

This Chapter relates to the *LRFD Bridge Design Specifications*, Sections 1, 3, and 4. Section 1 discusses the principles of limit state design and Section 3 addresses loads, imposed deformations, load factors and load combinations.

The following summarizes the discussion of structural loads and force effects in this Chapter relative to the rest of Part VI.

1. Permanent Loads. This consists of the application of alternative sets of load factors specified for permanent loads and for imposed deformations.

2. Gravitational Live Load. This Chapter provides a treatment on vehicular live loads with reference to the following:

    a. the live load regime: tandem or truck coincident with a uniformly distributed load, as specified by the *LRFD Specifications*;
    b. a description of five heavy vehicles permitted to operate in the State of Indiana for which certain bridges should be investigated; and
    c. a discussion on fatigue loading in conjunction with the design of steel structures.

3. Creep, Shrinkage, and Temperature. The use of alternative load factors, introduced by the *LRFD Specifications* for the effects of creep, shrinkage, and uniform temperature, is discussed. See Section 60-4.02.

4. Earthquake. Section 60-3.06 discusses earthquake effects.

5. Ice. Section 60-3.07 discusses ice forces on piers.

60-1.02 Non-Technical Issues

LRFD Specifications Article 1.3.1 states that *bridges shall be designed for specified limit states to achieve the objectives of constructibility, safety and serviceability, with due regard to issues of inspectability, economy and aesthetics*. Through this provision, the *Specifications* expand the traditional family of design objectives of constructibility, safety, and economy by means of concerns for maintenance and social issues. The first relates to the *Specifications*' requirement of 75 years for a reasonably trouble-free service life, and the second reflects the pleasure and comfort of the highway user. Section 2 of the *Specifications* provides extensive guidance on how the 75-year target service life may be achieved, and thus emphasizes the significance of non-strength issues.

60-1.03 Limit States

For the purpose of this Chapter, extreme applies to both maximum and minimum. Components and connections of a bridge are designed for strength, or derivatives of strength, at various limit states. The basic design relationship between load effects and structural performance for all limit states is as follows:

$$\sum \eta_i \gamma_i Q_i \leq \phi R_n \qquad \text{(Equation 60-1.1)}$$

Where:

γ_i	=	load factor
Q_i	=	load or force effect
ϕ	=	resistance factor
R_n	=	nominal resistance

For loads for which a maximum value of γ_i is appropriate,

$$\eta_i = \eta_D \eta_R \eta_I \qquad \geq 0.95$$

For loads for which a minimum value of γ_i is appropriate,

$$\eta_i = \frac{1}{\eta_D \eta_R \eta_I} \leq 1.0$$

where η_D, η_R, η_I are load modifiers relating to ductility, redundancy, and operational importance, respectively.

The left-hand side is the sum of the factored load (force) effects of a type of effect acting on a component, and the right-hand side is the factored nominal resistance of the component for the

type of effect. Where various types of force effects interact at a section of a component (e.g., shear and moment in a concrete beam) or where a load produces both force effect and resistance (e.g., fill behind a retaining wall), either special interaction formulae are provided in the *LRFD Specifications* or the effects are artificially separated for design.

The strength limit state factors to be used are as follows:

η_D = 1.05 for components subject to brittle failure
η_D = 1.00 for conventional design and details complying with the *LRFD Specifications*
η_R = 1.05 for a simple span with non-integral supports or non-redundant structures
η_R = 1.00 for any other type of bridge
η_I = 1.05 for a National Highway System bridge, or a bridge which provides "single access" to a military base, medical facility, generating station, or a considerable population
η_I = 0.95 for a highway classified as a local road or street
η_I = 1.00 for a bridge on any other type of highway

In addition to the *LRFD Specifications*, the following should apply to the application of limit states.

Limit State	Investigation
Strength I	HL-93 vehicular loading, toll road live-load vehicles and Michigan Truck Train live-load vehicles without wind.
Strength II	If special permit vehicles, such as trucks carrying large transformers are anticipated, they shall be analyzed under this limit state. No wind load need be considered.
Strength IV	To be considered for dead-load to live-load force effect ratios greater than 7.0. The objective of this Limit State is to prevent permanent deformation due to dead load.
Extreme Event I	Earthquake. γ_{EQ} for live load should be taken as 0.5.

60-2.0 PERMANENT LOADS

60-2.01 General

The *LRFD Specifications* specifies seven types of permanent loads, which are either direct gravity loads or caused by gravity loads. New in this group is downdrag, DD, which is the result of soil consolidation around a deep foundation. Prestressing is considered part of resistance and has been omitted from the list of permanent loads in *LRFD Specifications* Section 3. However,

in designing anchorage blocks and evaluating shear resistance, the prestressing force is contributing to load effects. In some situations it may be the dominating load.

As shown in *LRFD Specifications* Table 3.4.1-2, there are two sets of load factors for permanent loads. They should be applied where the sum of force effects can be both positive and negative. For example, this situation may occur in the end bearing design of a continuous superstructure with relatively shortened spans. Where the transient live load is in the end span, it causes compression and, if in the second span, uplift. The following combinations should be considered in this situation.

1. If dead-load reaction is compressive, for extreme compression use the maximum load factor and, for extreme uplift, use the minimum load factor.

2. If dead-load reaction is tensile, for extreme compression use the minimum load factor and, for extreme uplift, use the maximum load factor.

The load factor for a given loading situation should be the same for all spans.

60-2.02 Uplift

Uplift had been formerly treated as a separate loading situation. With the introduction of variable load factors, uplift has been reduced to one of the load combinations.

60-2.03 Concrete Deck Slab

If a concrete deck slab is placed on stay-in-place corrugated metal formwork, the specified net concrete design section should be taken from the top of the form. The design dead load should include 15 psf of deck area for a deck formed with permanent metal forms to accommodate the weight of the forms and of the concrete in the valleys of the forms' corrugations. Clear spans between girders or beams exceeding 9.5 ft will require metal forms with the corrugations closed off, which prohibit concrete from entering the valleys of the corrugations. Although permanent metal deck forms, which provide a dead load of less than 15 psf, are available, the 15 psf should be retained as the minimum design load. In addition to the dead load of the initial structure, the design dead load should be increased by 35 psf for a future wearing surface or overlay.

60-2.04 Utilities

The designer should obtain information concerning the weight and location of utilities that may be attached to the bridge.

60-2.05 Dead-Load Values

Figure 60-2A illustrates typical dead-load values.

60-2.06 Dead-Load Distribution

Reference: Article 4.6.2.2.1

Typical practices for distributing dead load to beams or girders are as follows:

1. Future wearing surface load should be applied equally to all beams.
2. Dead load due to barrier railings, curbs, and sidewalks, placed after the deck has set, should be distributed equally to all beams.
3. Concrete dead load of deck applied to the outside girder should be in accordance with the lever rule described in *LRFD Specifications* C4.6.2.2.1.
4. Capacity of outside beams should not be less than the capacity of interior beams. All interior beams should be equally sized.
5. For utilities, the lever rule can be used to compute the load to the adjacent beams. Utility loads may be equally applied to all beams at the designer's discretion.

60-3.0 TRANSIENT LOADS

60-3.01 Introduction

The *LRFD Specifications* recognizes 19 transient loads. There are collision loads, for which vessel collision has limited application. There are requirements for vehicle and railway collision forces on a structure. See Section 60-3.08. Water pressure, stream pressure, buoyancy, and wave action have been integrated as water load. Creep, settlement, shrinkage, and temperature have been elevated in importance to loads in terms of causing direct and indirect force effects, e.g., variation in eccentricity. See Section 60-4.02. Vehicular braking force has been increased considerably to reflect the improvements in the mechanical capability of modern trucks.

60-3.02 Vehicular Live Load

60-3.02(01) General

Vehicular live load is most often the most important load. Vehicular live loading (HL-93) should consist of the design truck or design tandem and the design lane load.

The design truck or the design tandem or parts of the truck are to be placed on the bridge in governing position to produce the maximum force effect, and the largest is selected. Axle loads and uniformly distributed loads that do not contribute to the extreme force effect under consideration should be neglected.

The 33% dynamic load allowance is applicable only to the design truck and the design tandem and their constituent axle and wheel loads, but not to the design lane load.

The 1.0 multiple presence factor for two loaded lanes is the result of the *LRFD Specifications*' calibration process relative to two side-by-side vehicles. The 1.2 factor should be used where a single tandem or single vehicle or its constituent axle or wheel loads govern, such as in overhangs, decks, fatigue, etc.

The *LRFD Specifications* retains the traditional design lane width of 12 ft and the spacing of axles and wheels of the design truck. Both the design truck and the design lane load occupy a 10-ft width within the design lane. The design lane load now represents a statistically acceptable mixture of vehicles both preceding and following the design truck. The design lane load is no longer an alternative to the truck, but one applied simultaneously with either the design truck or tandem. The *Specifications* requires that the design lane load should not be interrupted by the space occupied by the truck or tandem.

Article 3.6.1.3.1 requires that two design trucks, combined with the lane load, be applied within the spacing limitations specified, on adjacent spans of a continuous structure for negative moments and reactions at interior supports. The reduced probability of such an occurrence is accommodated by multiplying the resulting force effects by 0.9.

Section 60-5.0 discusses the application of vehicular live load.

60-3.02(02) Toll Road and Michigan Design Trucks

Each bridge should be designed for the HL-93 vehicular live load described above. In addition, a series of design truck loads should be used as described as follows:

1. Toll Road Live Load. In addition to the *Specifications'* live load regime, the Toll Road live load should apply to each State highway bridge located within 15 mi of an Indiana Toll Road gate. A single truck with design lane load should be used in each design lane. This loading should be investigated under Strength I Limit State. The configurations of

the three Toll Road live load vehicles are shown in Figures 60-3A, 60-3B, and 60-3C. Factors for multiple presence and dynamic load allowance should be the same as those used for regular design trucks.

2. Michigan Truck Train Live Load. In addition to the *Specifications'* live load regime, the Michigan Truck Train live load should apply to each bridge located on the Indiana Extra Heavy Duty Highway System. The locations of these highways are shown in Figure 60-3D. The configurations of the two Michigan Truck Train vehicles are shown in Figures 60-3E and 60-3F. A single truck with design lane load should be limited to one design lane located to cause extreme force effects, while the other design lanes are occupied by regular design loads. This loading combination should be investigated under the Strength I Limit State. Factors for multiple presence and dynamic load allowance should be the same as those used for regular design trucks.

These design trucks should not be employed for fatigue considerations, but may be used for centrifugal and braking forces.

60-3.02(03) Fatigue Load

1. Fatigue Load. The fatigue load consists of a single design truck per bridge with a load factor of 0.75. This considerable reduction in comparison with traditional values is compensated by considering low-level stress ranges with a frequency that exceeds the traditional two million cycles. The dynamic load allowance of 15% should be applied to the fatigue load.

2. *LRFD Specifications* References. In summary, the *Specifications* discusses fatigue load in the Articles as follows:
   a. Article 3.6.1.4;
   b. Article 5.5.3;
   c. Article 6.5.3;
   d. Article 6.6.1;
   e. Article 6.10.6; and
   f. Article 6.13.2.10.3.

3. Frequency. The frequency provisions of the *LRFD Specifications* always apply. See Section 64-4.01(02) for stress cycles.

60-3.03 Centrifugal and Braking Forces, and Wind Pressure on Vehicle

Centrifugal forces, braking forces, and wind pressure on a vehicle should be applied at 6 ft above the profile grade at the centerline of the pier or bent.

60-3.04 Stream Pressure

A drag coefficient, C_D, should be used (see Article 3.7.3.1).

60-3.05 Forces Due to Friction

Section 67-4.0 discusses friction forces within the context of bearings.

60-3.06 Earthquake Effects

Each bridge located in Gibson, Posey, or Vanderburgh counties is assigned to Seismic Zone 2 and should be designed using an acceleration coefficient, A, of 0.10. Each bridge in the remainder of the State is assigned to Seismic Zone 1.

LRFD Specifications Article 3.10.3 requires that each bridge be classified according to its Importance Category, Essential or Other. An Essential bridge is one on or over the National Highway System.

60-3.07 Ice Forces on Piers

The following describes criteria for determining ice forces on piers.

1. Effective ice crushing strength, p = 165 psi.
2. Ice thickness, t = 1 ft.
3. The horizontal force should be applied midway between the Q_{100} elevation, i.e., the water elevation at the 100-year frequency flood event, and the low-water elevation.
4. If the low-water channel width is less than 60 ft, a reduction factor, K_1, of 0.75, and p = 55 psi, should be used.
5. *LRFD Specifications* Articles 3.9.3, 3.9.4, 3.9.5, and 3.9.6 do not apply.

60-3.08 Vehicle or Train Collision with Structure

Unless the structure is protected as specified in Article 3.6.5.1, the abutments, including those used as mechanically stabilized earth retaining walls, and piers located within 30 ft of the edge of

roadway, or within a distance of 50 ft to the centerline of a railway track, should be designed for loads in accordance with Article 3.6.5.2.

60-3.09 Vessel Collision with Structure

In a navigable waterway, where vessel collision by merchant ships and barges may be anticipated, the bridge structure should be designed using load combination Extreme Event II to prevent collapse of the superstructure by considering the size and type of the vessel, available water depth, vessel speed, and structure response in accordance with *LRFD Bridge Design Specifications* Article 3.14. For a list of navigable waterways, see Section 9-3.06. For additional information, see the AASHTO *Guide Specification and Commentary for Vessel Collision Design of Highway Bridges*. The Design Water Depth should be computed from the bottom of the waterway to the annual mean high water level.

60-4.0 ELASTIC STRUCTURAL ANALYSIS

60-4.01 General

The *LRFD Specifications* is a hybrid design code in that all analytical procedures, which are promoted and/or permitted, are based on elastic structural properties while structural safety is determined dominantly by applying strength; i.e., limit state principles. Methods of inelastic analysis are still in the developmental phase, and their use is almost exclusively limited to research work. The validity of such methods can only be established by extensive (and expensive) physical testing of bridges yet to be conducted. The hybrid nature of structural design is adopted on the assumption that the inelastic component of structural performance will always remain relatively small due to non-critical redistribution of force effects. This non-criticality is assured by providing adequate redundancy and ductility of the structure, which is the general policy for bridge design.

This Section discusses the effects of imposed deformations such as elastic shortening, creep, shrinkage, temperature, and settlement.

60-4.02 Superimposed Deformations

Superimposed deformations include the following:

1. elastic shortening;
2. creep;
3. shrinkage;

4. temperature; and
5. settlement.

With the exception of settlement, all of these deformations are internally generated. More discussion on sectional (i.e., internal) effects of these imposed deformations is provided in Chapter Sixty-three.

The *LRFD Specifications* specify various load factors for these effects. The 1.20 relates to the fact that the movement calculated on the basis of specified values may occasionally be exceeded, and the excess will not likely be larger than 20%.

The poor performance of many deck joints and expansion bearings may be traced to an underestimate of extreme movements of retaining walls and abutments due to earth pressure or pavement expansion which can be cumulative with the effects of the other three. Deck joints frozen by substructure movements are often reported. A pavement relief joint is provided at the end of each reinforced concrete bridge approach pavement, and the effect of pavement expansion can be neglected.

The designer should determine extreme combinations of the effects of creep, shrinkage, and uniform temperature in accordance with the *LRFD Specifications*, and the substructure displacement considering strain and/or relative structural movement, whichever applies, and multiply them by 1.20. If a calculated force effect is a direct response to creep, shrinkage, and uniform temperature, a load factor of 0.50 for strength limit states and 1.00 for service limit states should be used. In theory, any load factor less than 1.0 signifies that the effects of superimposed deformation tend to dissipate at strength limit states due to inelastic action. This may be further reduced if so justified by inelastic analysis. If the calculated force effect is an indirect response, such as for altering eccentricity of gravitational or other loads, the load factors specified for these loads should be applied, but the eccentricity caused by the deformation should be upgraded by the factor 1.2.

Indiana is considered to be in a cold climate. A setting temperature of 60°F should be used for the installation of expansion bearings and expansion deck joints.

60-5.0 LOAD APPLICATIONS (TWO DESIGN TRUCKS)

The combination of the design lane load and the design truck or tandem does not always adequately represent the real-life loading by two heavy vehicles, interspersed with lighter passenger cars, following one another in the same lane. Where two design trucks are used, the distance between the 32-kip axles of each truck should be taken as 14 ft. Axles that do not contribute to the extreme force effect under consideration should be neglected. Two design trucks, with a distance not less than 50 ft between the lead axle of one truck and the rear axle of

the other truck and with an adjustment factor of 0.90, to both the effect of the design trucks and design lane loads, should be used to determine maximum negative moments and reactions at interior supports.

In applying the design lane load and two design trucks to calculate the maximum negative moment of a two-span continuous beam, as illustrated in Figure 60-5A, both spans should be at least 90-ft in length to place both trucks in governing positions. If each span is 90 ft, the trucks remain in governing positions. If each span is shorter than 90 ft, the maximum force effect can only be attained by trial and error. The maximum force effect will be provided by either of the methods as follows:

1. one truck in governing position and the other truck in off-position, as shown in Figure 60-5A; or

2. both trucks in off-position.

In this situation, the moments can be calculated using influence ordinates directly under the truck axles.

Dead Load	Value
Future wearing surface	35 psi
Permanent metal deck forms	15 psi
Reinforced concrete	150 lb/ft^3
Earth	120 lb/ft^3
Water	62.4 lb/ft^3
Lateral soil pressure	
(Equivalent fluid pressure)	32.5 lb/ft^3

TYPICAL DEAD LOADS

Figure 60-2A

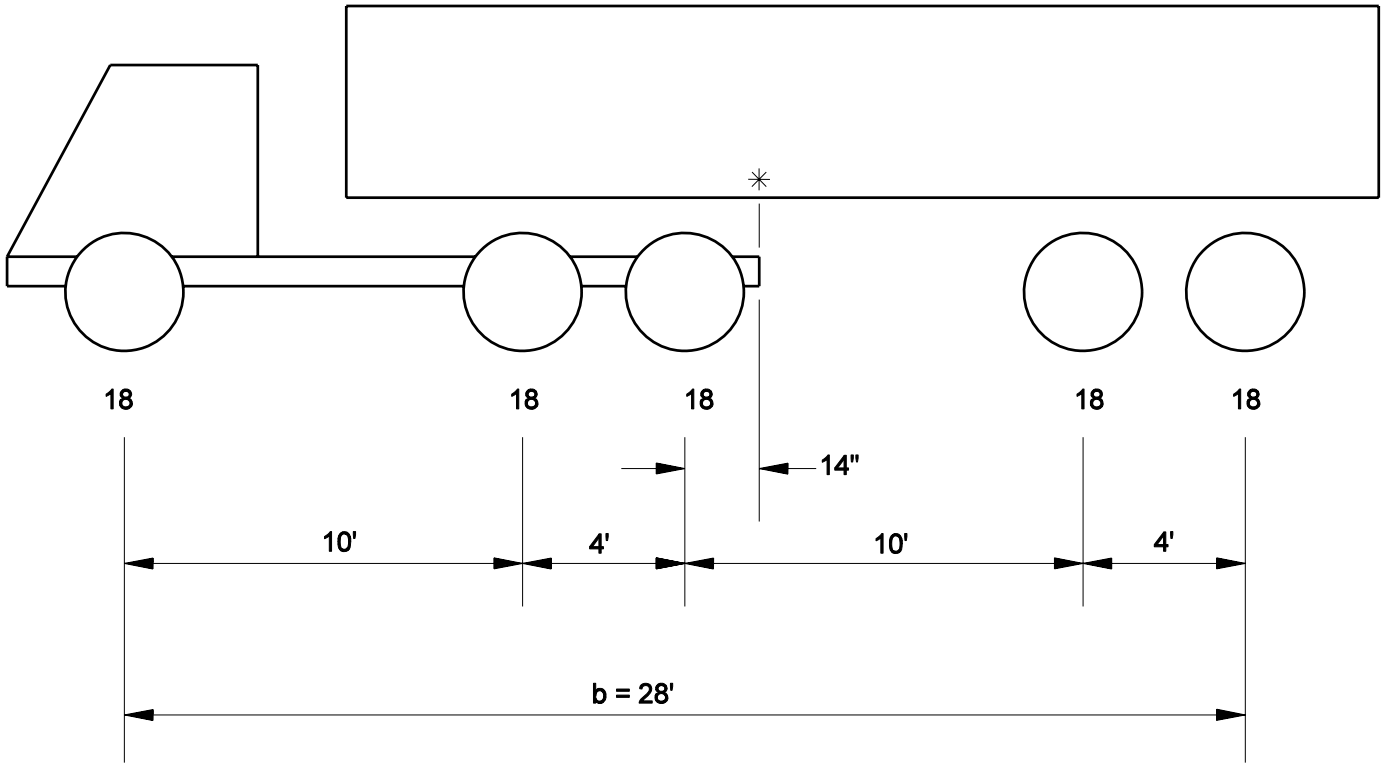

✳ INDICATES CENTER OF GRAVITY OF VEHICLE.

TOLL ROAD LOADING NO. 1

(W = 90 kip)

Figure 60-3A

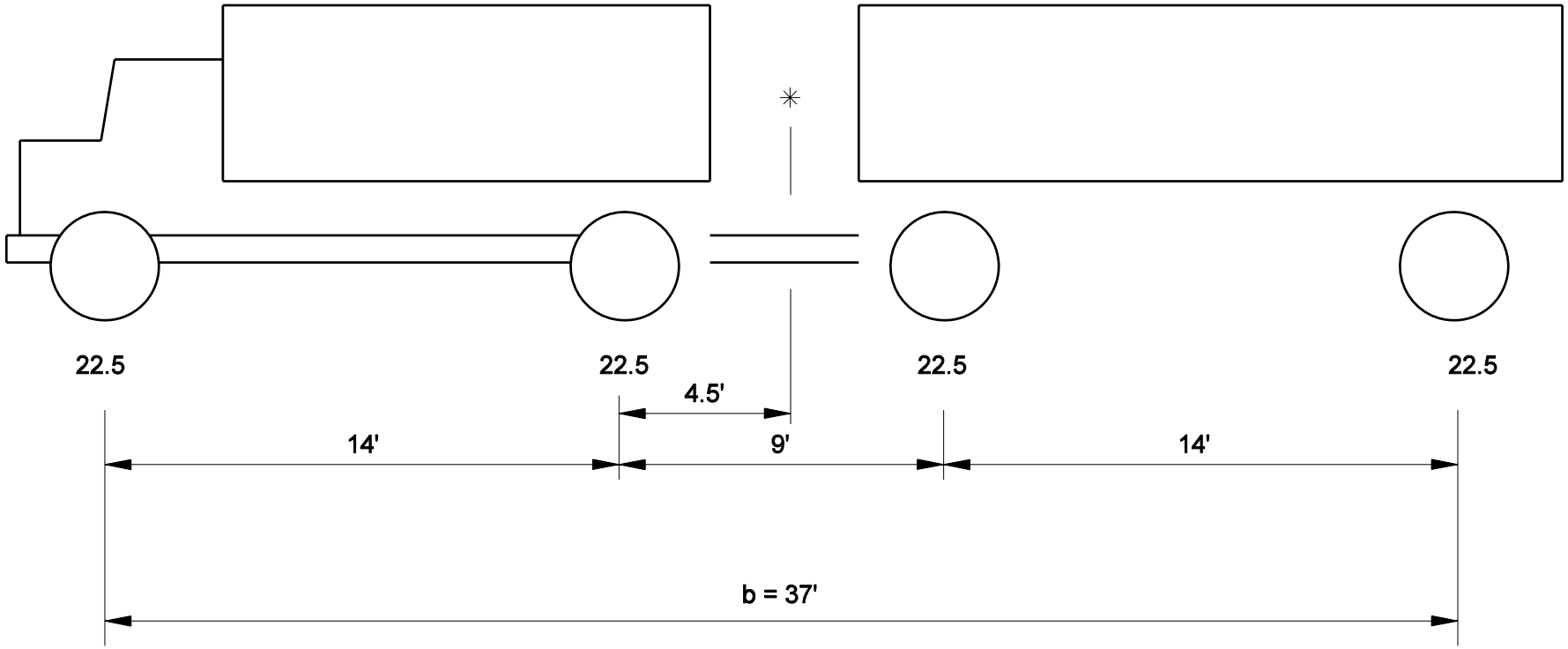

✳ INDICATES CENTER OF GRAVITY OF VEHICLE.

TOLL ROAD LOADING NO.2
(W = 90 kip)

Figure 60-3B

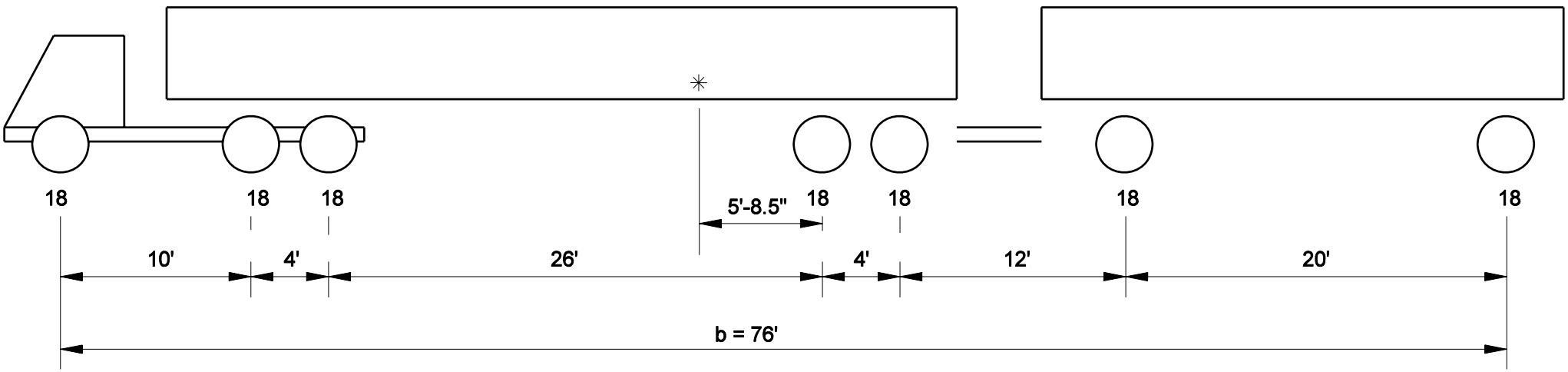

✳ INDICATES CENTER OF GRAVITY OF VEHICLE.

SPECIAL TOLL ROAD TRUCK
(W = 126 kip)

Figure 60-3C

The following routes are designated as extra-heavy-duty highways.

(1) US 41, from 129th Street in Hammond to SR 312.
(2) SR 312, from US 41 to SR 912.
(3) SR 912, from Michigan Avenue in East Chicago to the US 20 Interchange.
(4) US 20, from Clark Road in Gary to SR 39.
(5) US 12, from 0.25 mi west of the Midwest Steel entrance to SR 249.
(6) SR 249, from US 12 to US 20.
(7) US 12, from 1.5 mi east of the Bethlehem Steel entrance to SR 149.
(8) SR 149, from US 12 to a point 0.36 mi south of US 20.
(9) SR 39, from US 20 to the Michigan state line.
(10) US 20, from SR 39 to SR 2.
(11) SR 2, from US 20 to US 31.
(12) US 31, from the Michigan state line to SR 23.
(13) SR 23, from US 31 to Olive Street in South Bend.
(14) US 35, from South Motts Parkway 0.34 mi southeast to the point where US 35 intersects with the overpass for US 20 / SR 212.
(15) SR 249 from US 12 to the point where SR 249 intersects with Nelson Drive at the Port of Indiana.
(16) SR 912 from the 15th Avenue and 169th Street interchange 1.06 mi north to the US 20 interchange.
(17) US 20 from the SR 912 interchange 3.17 mi east to US 12.
(18) US 6 from the Ohio State Line to SR 9.
(19) US 30 from Allen/Whitley County Line Road (also known as Co. Rte. 800E) to SR 9.
(20) SR 9 from US 30 to US 6.

INDIANA EXTRA-HEAVY-DUTY HIGHWAY SYSTEM

Figure 60-3D

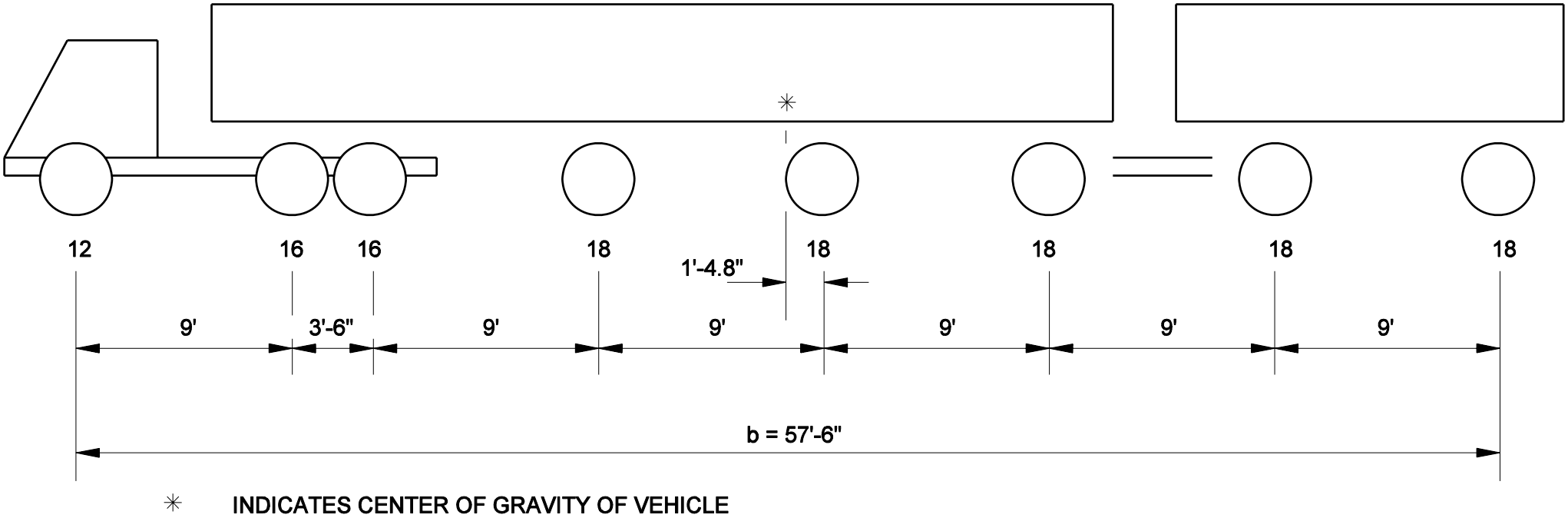

MICHIGAN TRUCK TRAIN NO. 5

(W = 134 kip)

Figure 60-3E

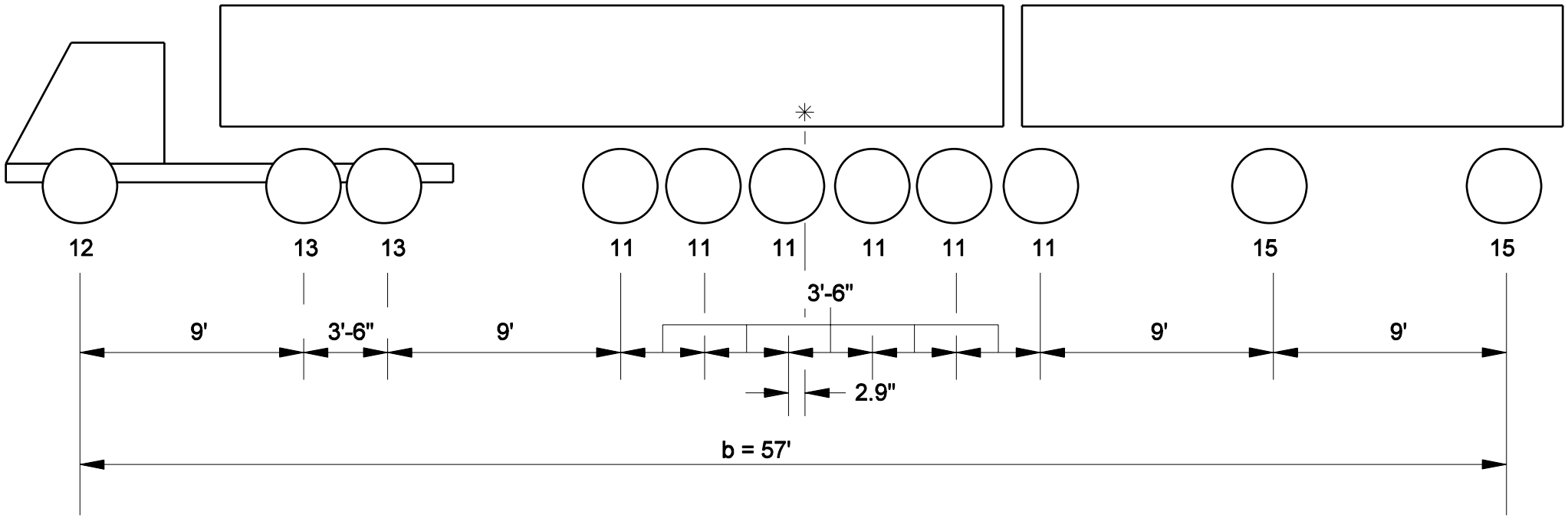

✳ INDICATES CENTER OF GRAVITY OF VEHICLE

MICHIGAN TRUCK TRAIN NO. 8

(W = 134 kip)

Figure 60-3F

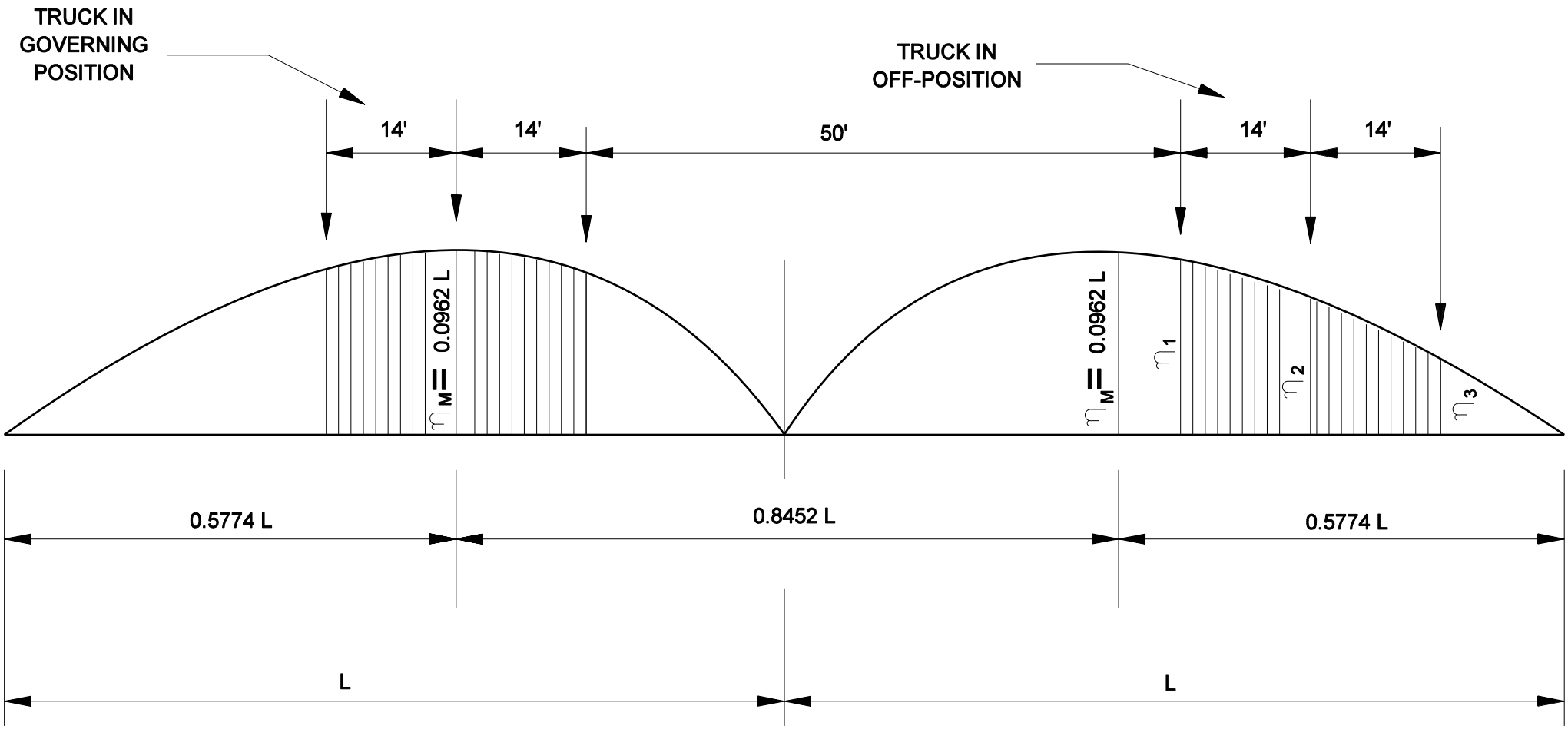

TWO-SPAN CONTINUOUS BEAM (L < 90 ft)

Figure 60-5A