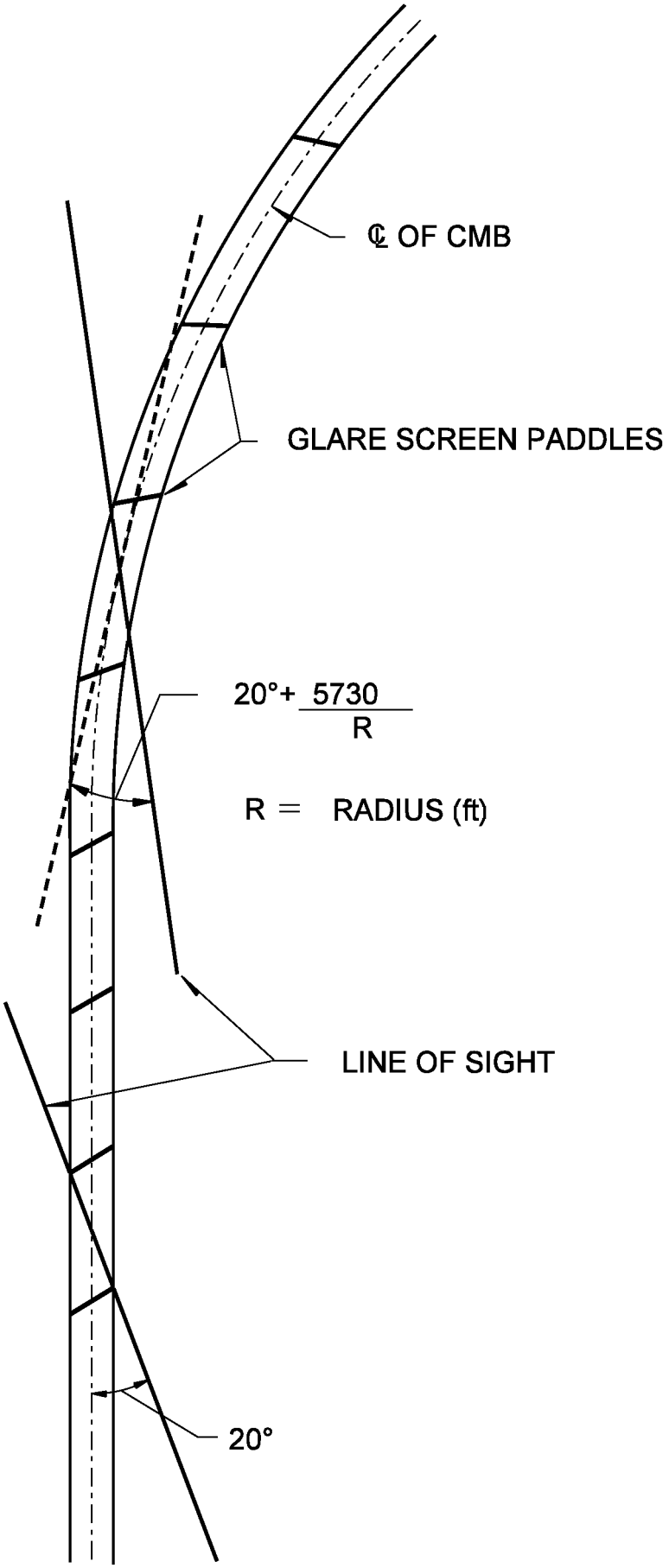

CUTOFF ANGLE FOR GLARE SCREEN

Figure 49-6F