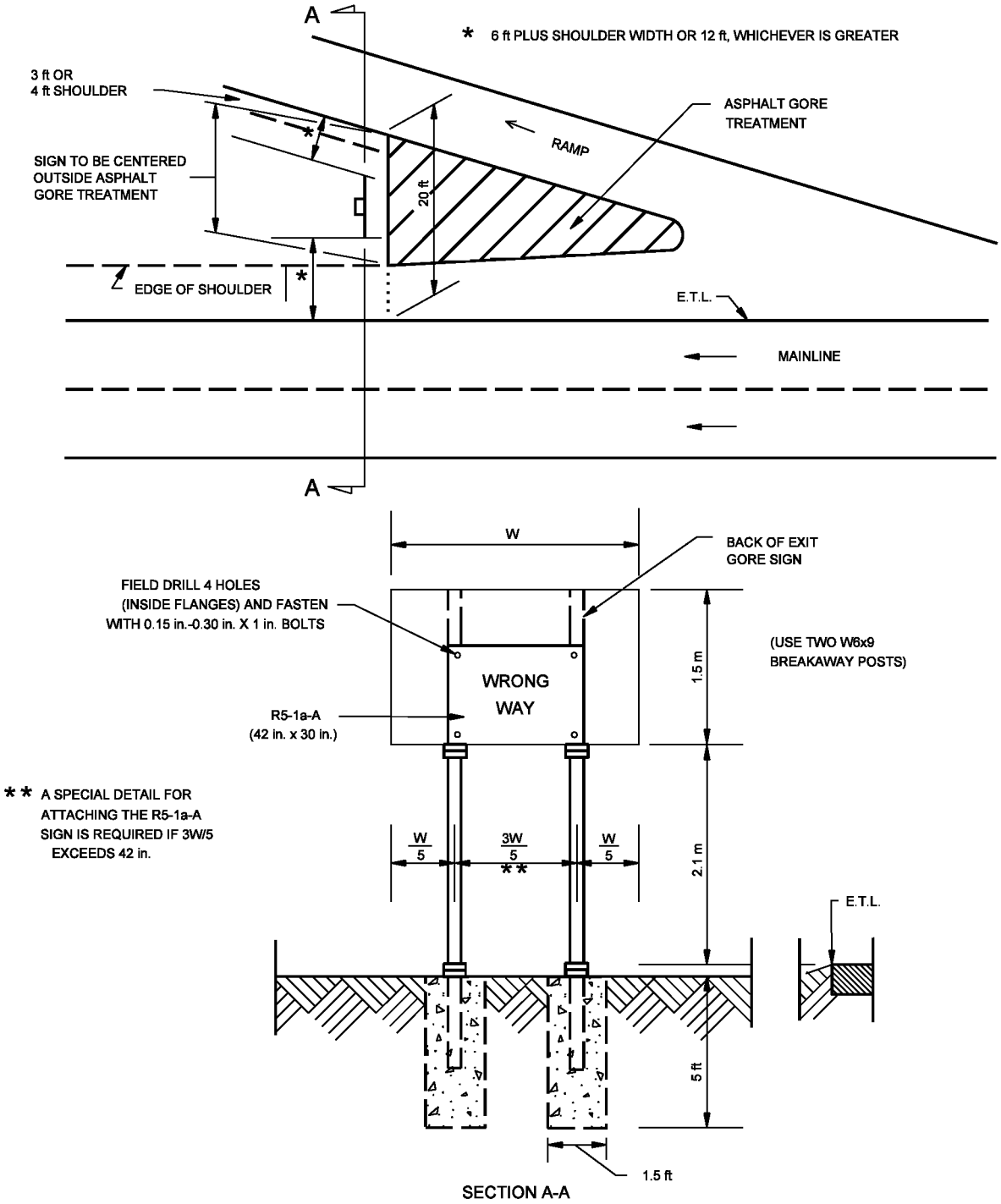

GORE-AREA TREATMENT

Figure 49-3 O