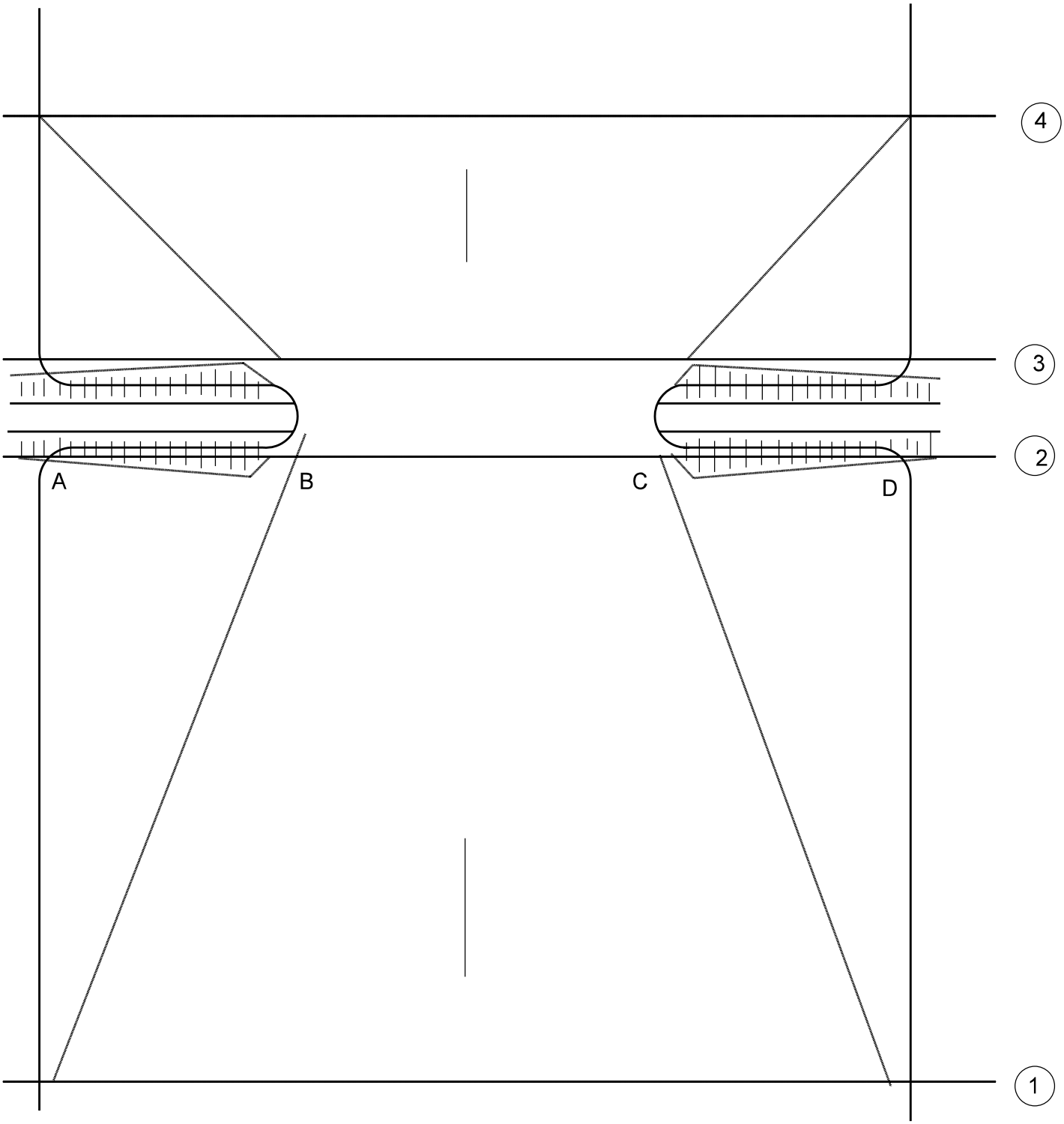

CROSS SECTION LOCATIONS IN THE VICINTY OF BRIDGES

Figure 32-4E