TABLE OF CONTENTS

Chapter Two..... 2
2.01 INTRODUCTION 2
2.02 PROJECT DEVELOPMENT CONSIDERATIONS..... 2

LIST OF FIGURES

Figure **Title**

2A Project Development Process (Highway Design Project)
2B Project Development Process (Bridge Rehabilitation Project)
2C Project Development Process (Roadway Lighting Project)
2D Project Development Process (Roadway Signing Project)

CHAPTER TWO

PROJECT DEVELOPMENT PROCESS

2.01 INTRODUCTION

Chapter Two documents the basic approach used by INDOT in its project development process. The chapter presents four networks which graphically illustrate the development of a "typical" project for the following:

1. a highway design project, as shown in Figure 2A, Project Development Process (Highway Design Project), which includes all of the following:

    a. road design projects;
    b. new bridge/bridge replacement projects;
    c. Interstate rehabilitation projects (not minor projects); and
    d. intersection improvement projects.

2. a bridge rehabilitation project, as shown in Figure 2B, Project Development Process (Bridge Rehabilitation Project;

3. a roadway lighting project , as shown in Figure 2C, Project Development Process (Roadway Lighting Project; and

4. a roadway signing project, as shown in Figure 2D, Project Development Process (Roadway Signing Project).

2.02 PROJECT DEVELOPMENT CONSIDERATIONS

In using Chapter Two, the user should consider the following:

1. Precedence Activity Network. The flowcharts are precedence activity networks. An "activity" occurs when a significant, discrete event occurs and/or when the responsibility for the project (activity) is transferred from one unit to another. The "precedence" nature of the network implies that an activity cannot occur until all activities preceding that one have been completed. However, the user must recognize that some flexibility is necessary to apply this network to project development.

2. Project Application. The networks represent an approximate process for a relatively complicated project for each project type. Not every activity will be applicable to every project; i.e., some activities will represent "zero" time on relatively minor projects. However, the user should find that projects which are developed according to these processes will have fewer management problems.

   The illustrated networks assume a project designed in-house. The process for a consultant-designed project will be similar, except that communication lines exist between INDOT and the consultant for INDOT review and approval.

   As indicated above, Figure 2A, Project Development Process (Highway Design Project), applies to Interstate rehabilitation projects. However, the modifications apply as follows:

   1. the public information meeting occurs immediately after the Field Check Review. A formal Public Hearing is not required, prior to Design Approval;

   2. there is no Grade Review nor Final Field Check Review; and

   3. only in rare cases will any right-of-way be required.

3. Lines of Communication. The rigid application of the networks would lead to predetermined, precise points at which communication occurs between units. This is neither realistic nor desirable. Communication between units must be continuous. This will result in fewer problems and fewer "surprises" in project development.

4. Emphasis. The objective of the network is to illustrate the significant activities for the primary design elements of a project (e.g., road design, bridge rehabilitation). Other project development elements (e.g., geotechnical, hydraulics) are illustrated as supplementary activities which diverge from and converge with the primary design process (i.e., the main spine of the network).

5. Other Manual Chapters. Part I contains several other chapters which provide complementary information to Chapter Two. The designer should review these chapters for more information on the project development process.

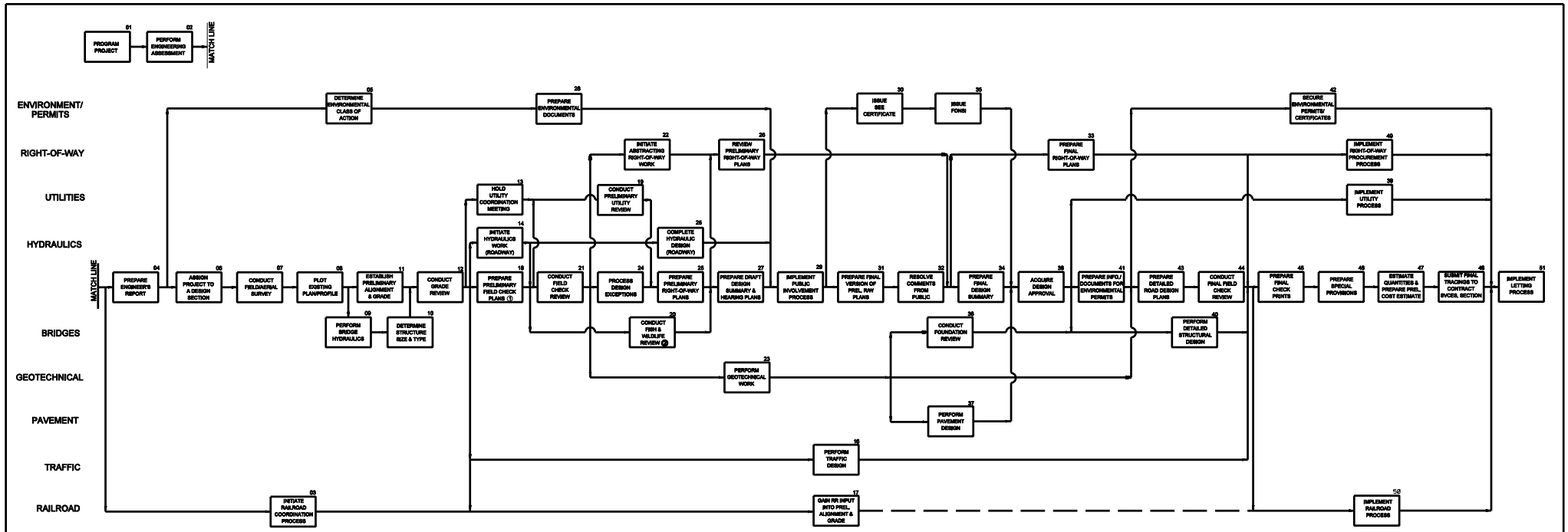

(1) ALSO INCLUDES PREPARATION OF PRELIMINARY DRAFT DESIGN SUMMARY.
(2) ALSO REQUIRED FOR ROAD PROJECTS WITH WETLANDS OR BLUE LINE STREAMS ON U.S.G.S. QUADRANGLE MAP.

PROJECT DEVELOPMENT PROCESS
(HIGHWAY DESIGN PROJECT)
FIGURE 2A

INDIANA DEPARTMENT OF TRANSPORTATION

JULY 1999

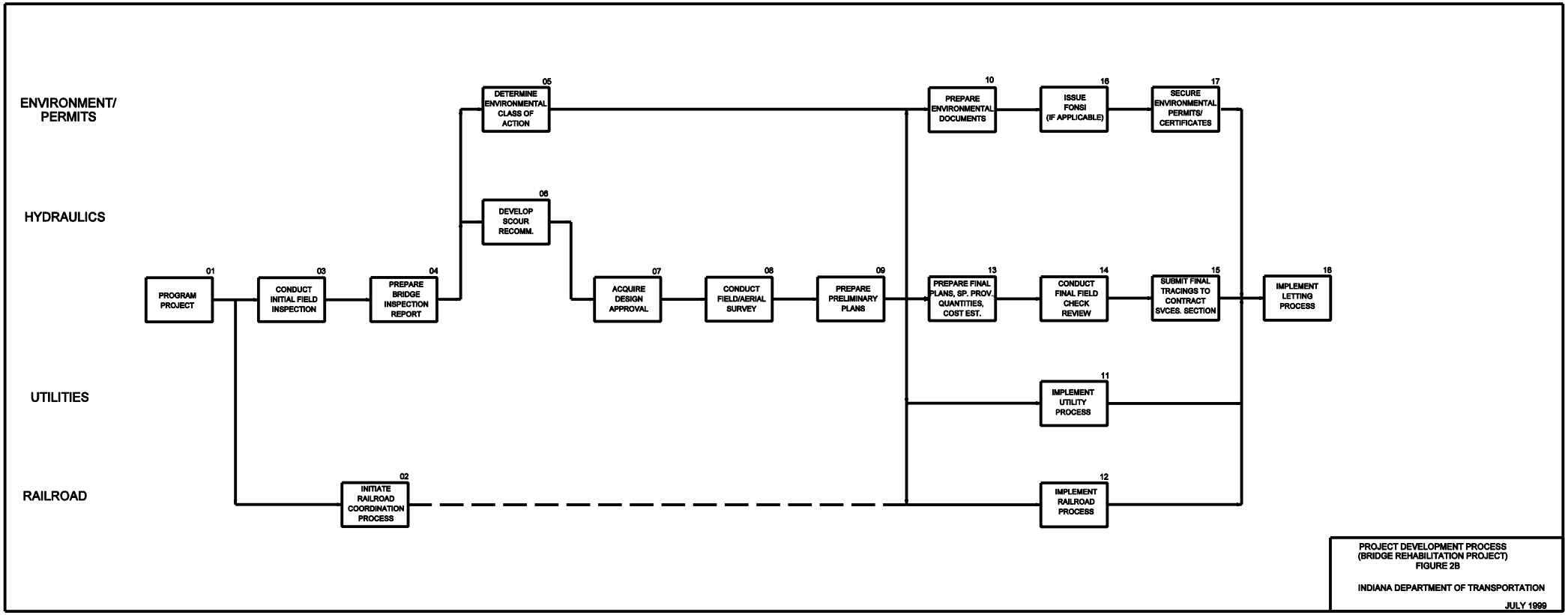

PROJECT DEVELOPMENT PROCESS
(BRIDGE REHABILITATION PROJECT)
FIGURE 2B

INDIANA DEPARTMENT OF TRANSPORTATION

JULY 1999

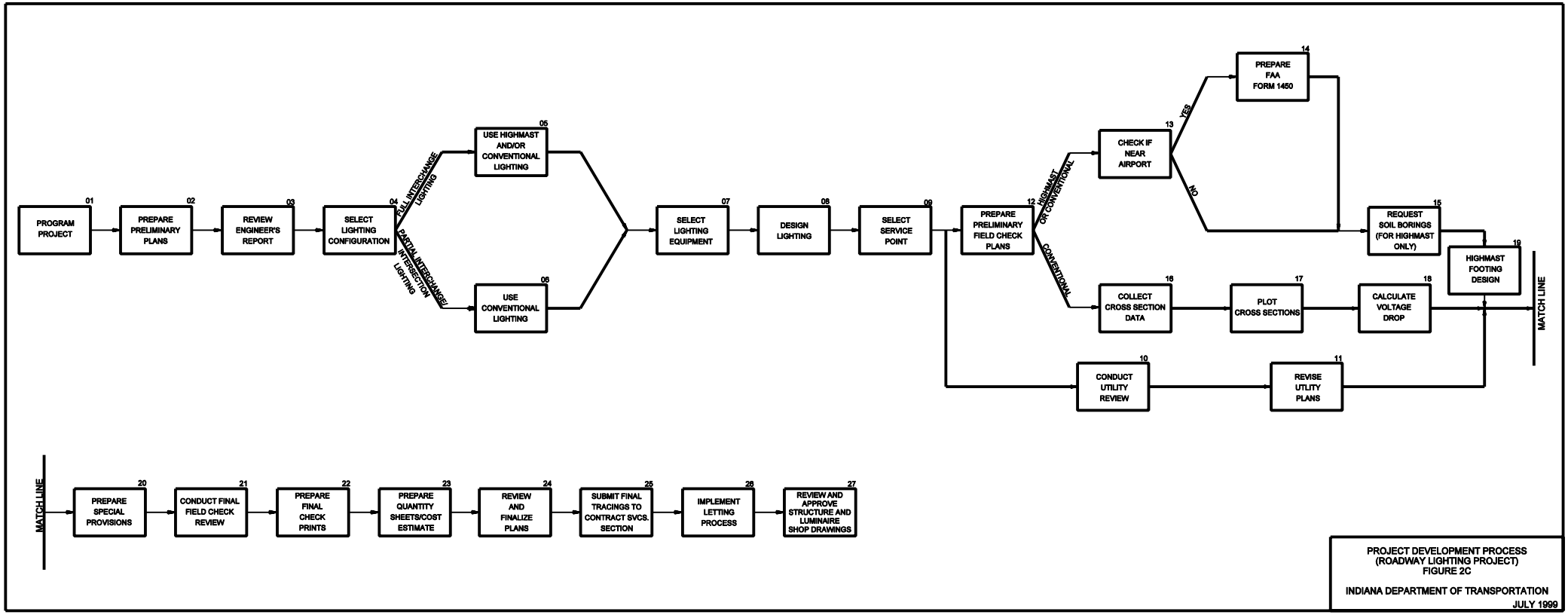

PROJECT DEVELOPMENT PROCESS
(ROADWAY LIGHTING PROJECT)
FIGURE 2C

INDIANA DEPARTMENT OF TRANSPORTATION
JULY 1999

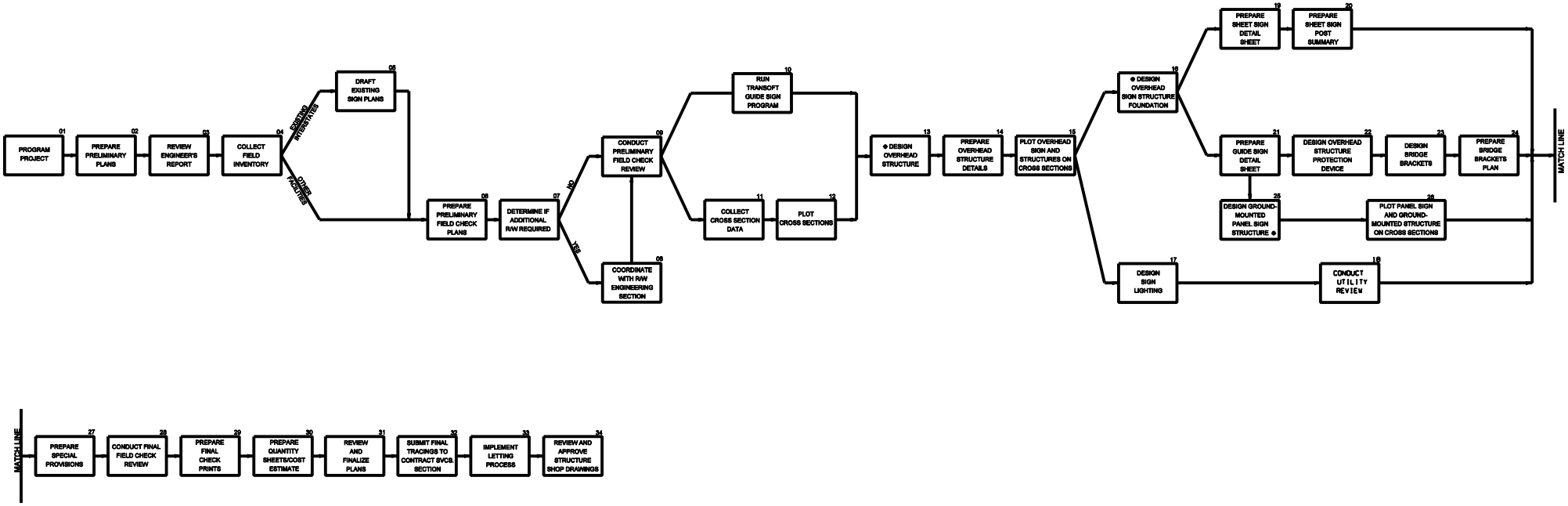

◆ USE INDOT SIGN DESIGN GUIDE.

PROJECT DEVELOPMENT PROCESS
(ROADWAY SIGNING PROJECT)
FIGURE 2D

INDIANA DEPARTMENT OF TRANSPORTATION
JULY 1999