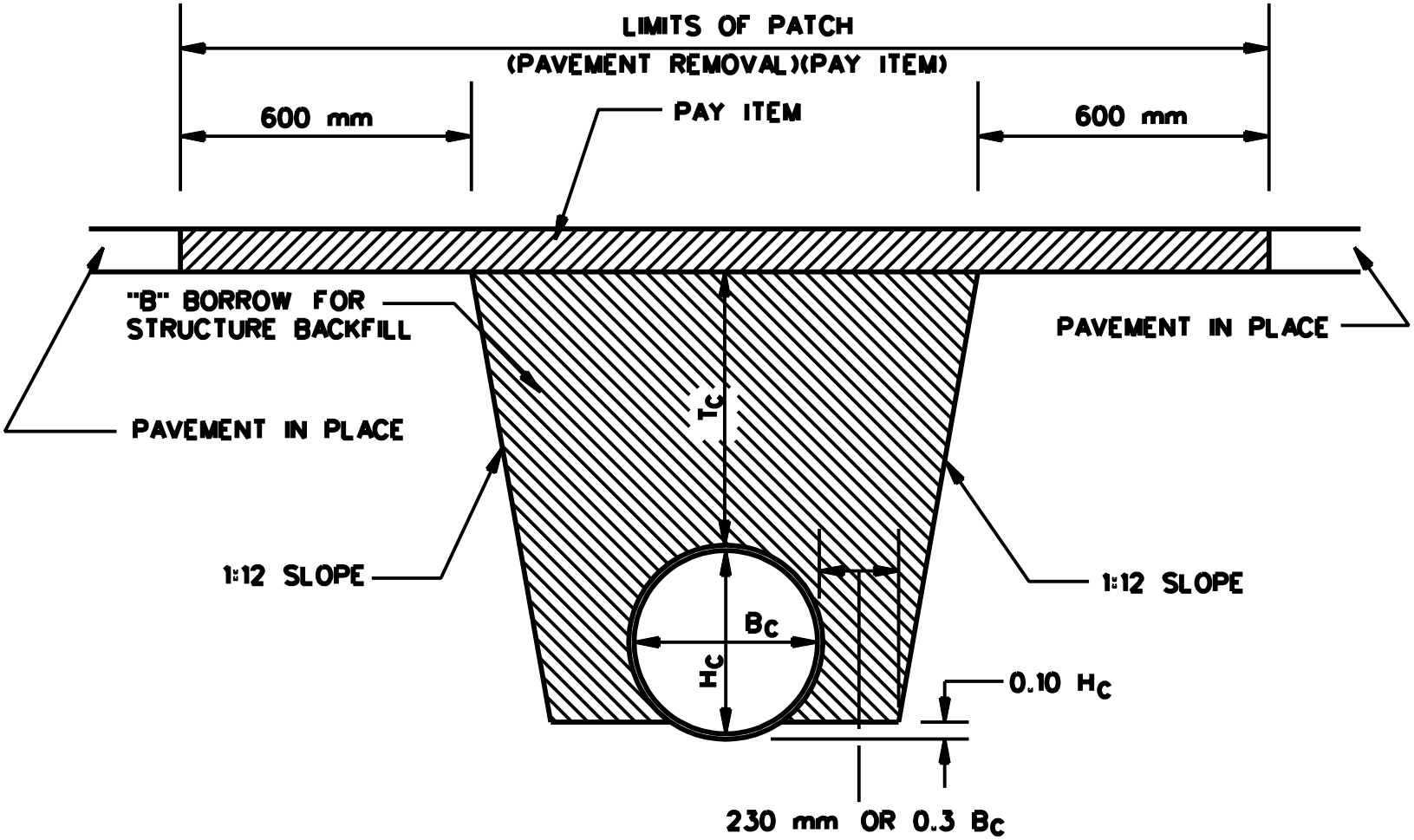

Note:

B_c = Overall diameter or span

H_c = Overall diameter or span

T_c = Trench cover depth

PLACEING PIPE UNDER EXISTING ROADWAY

Figure 17-3C