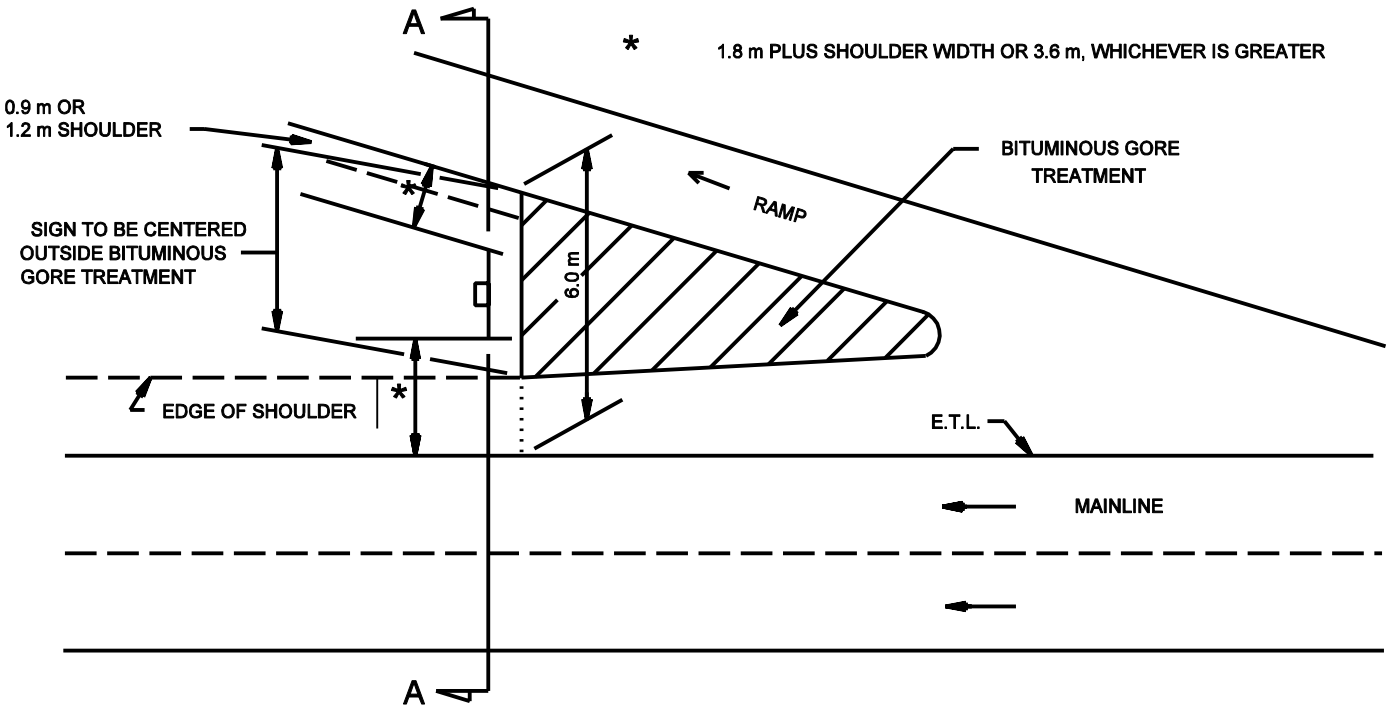

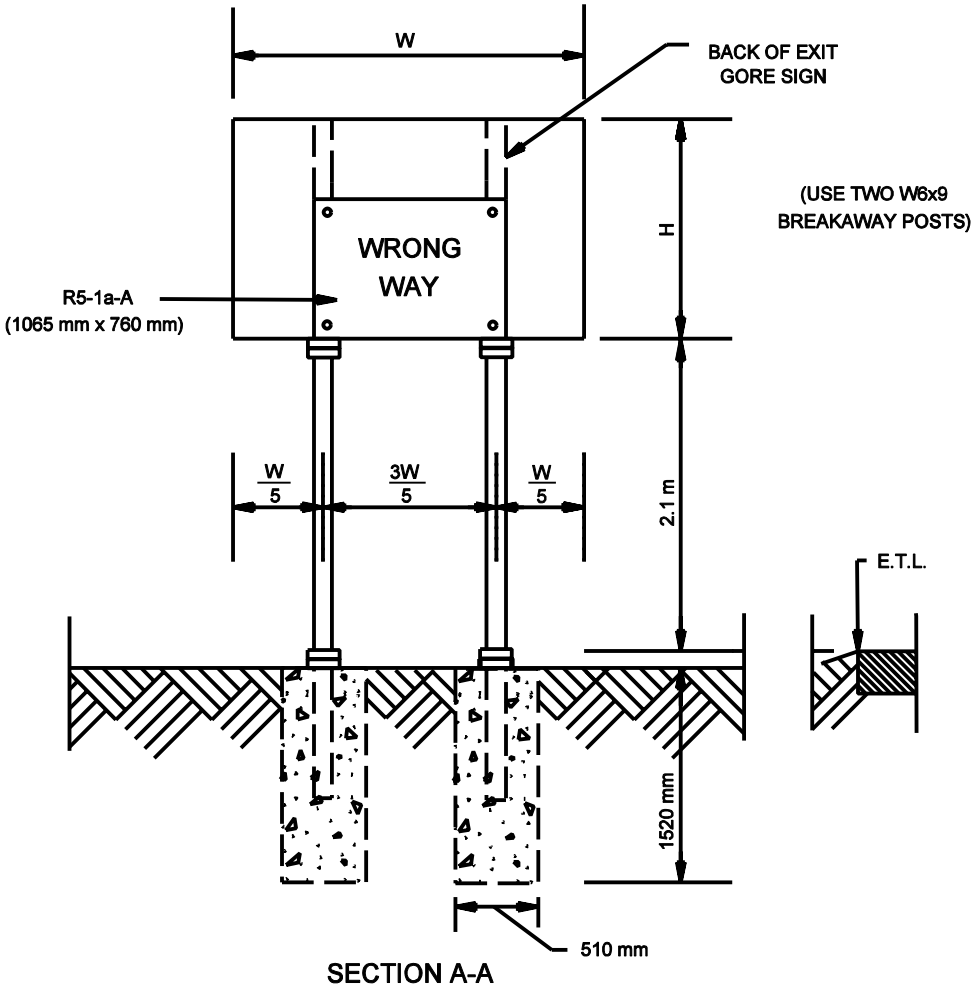

SIGN GORE TREATEMENT
Figure 75-2C