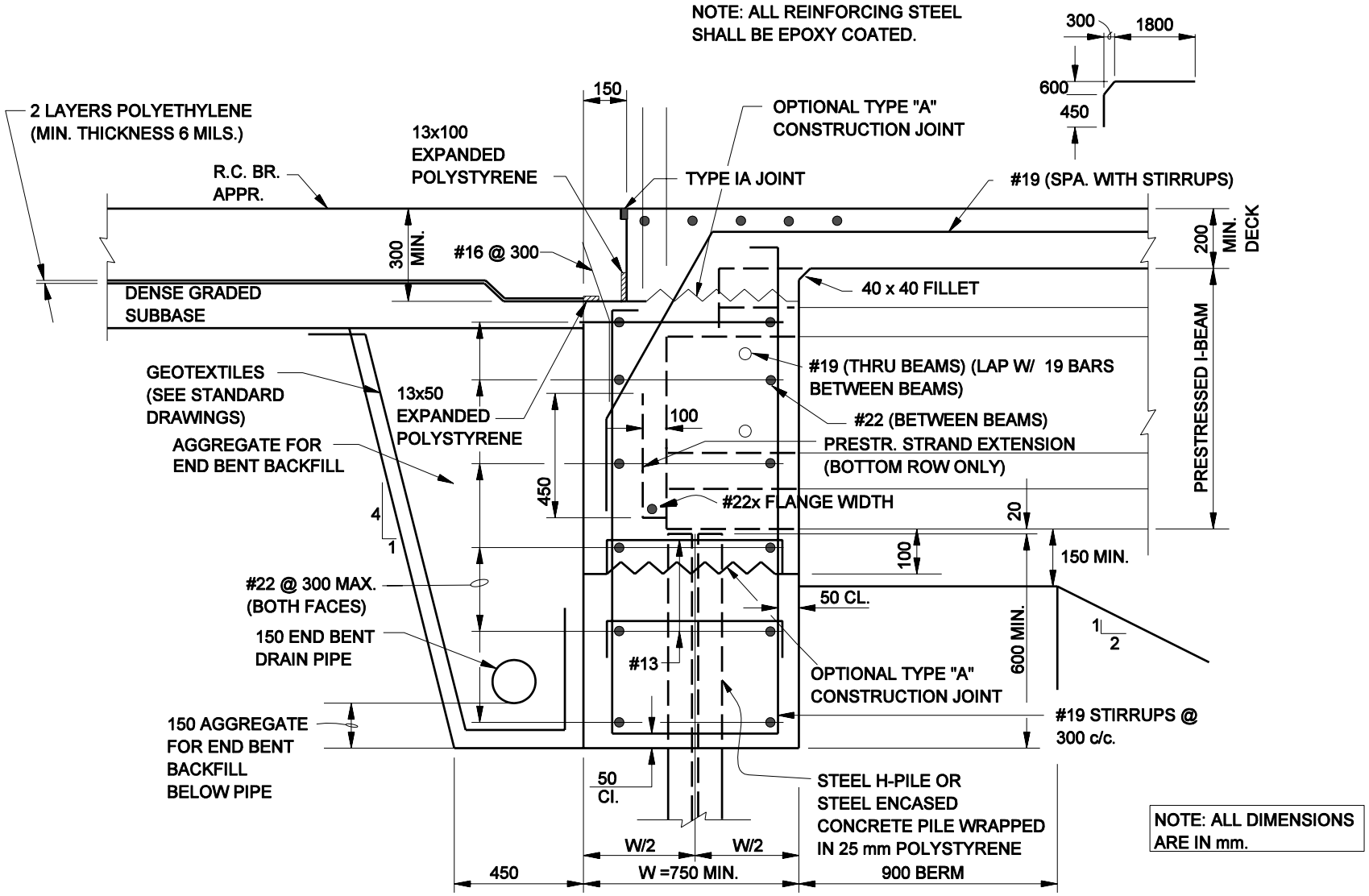

PRESTRESSED CONCRETE I-BEAM

SUGGESTED INTEGRAL END BENT DETAILS
(Beams Attached Directly to Piling, Method A)
Figure 67-1B

REINFORCING DETAILS, BACKFILL BEHIND END BENT AND SIMILAR DETAILS ARE AS SHOWN ON THE PRESTRESSED CONCRETE I-BEAM SECTION UNLESS OTHERWISE NOTED.

NOTE: ALL REINFORCING STEEL SHALL BE EPOXY COATED.

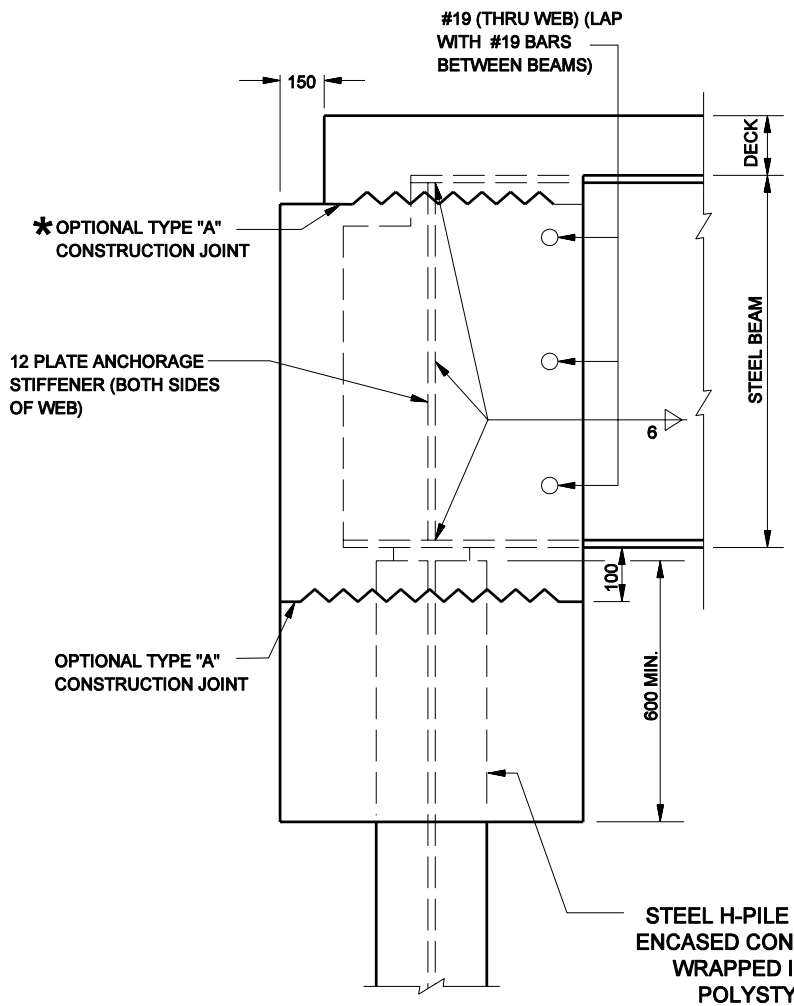

STEEL BEAM OR GIRDER

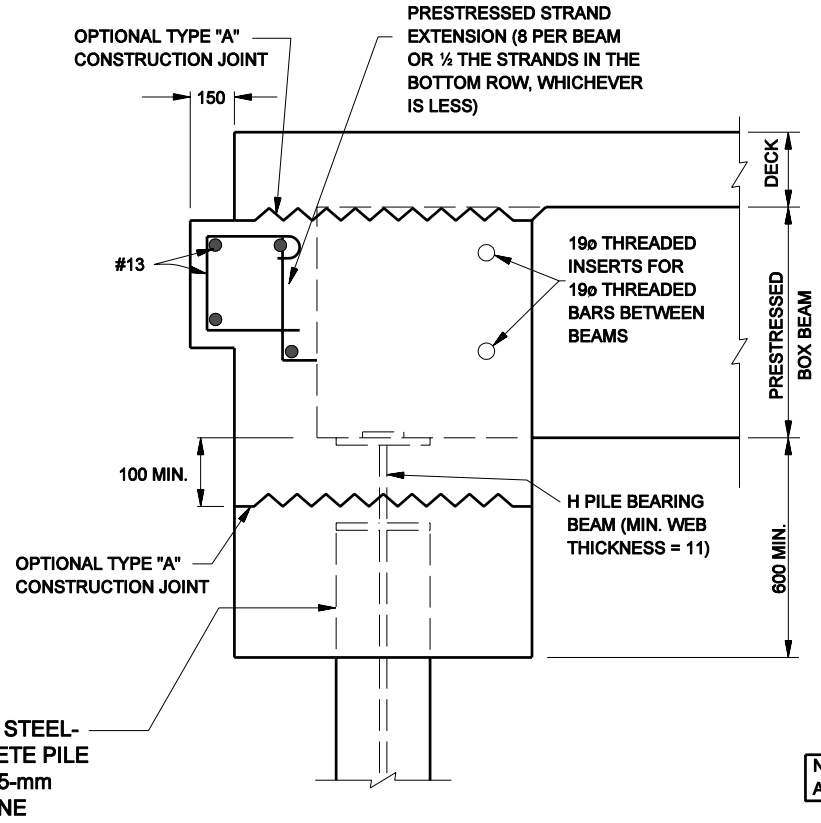

STEEL H-PILE OR STEEL-ENCASED CONCRETE PILE WRAPPED IN 25-mm POLYSTYRENE

PRESTRESSED CONCRETE BOX BEAM

NOTE: ALL DIMENSIONS ARE IN mm.

SUGGESTED INTEGRAL END BENT DETAILS
(Beams Attached Directly to Piling, Method A)
Figure 67-1B
(Continued)

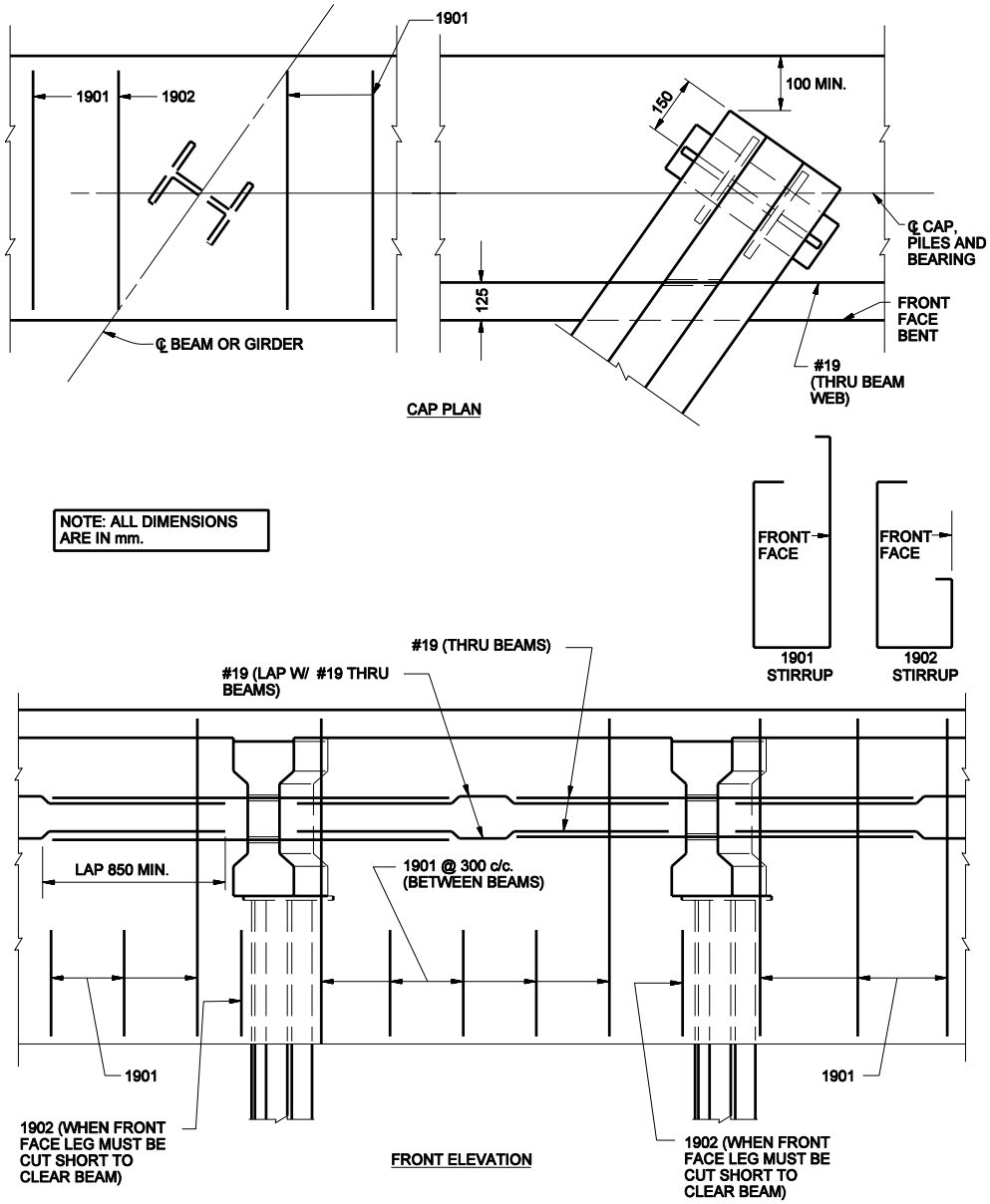

SUGGESTED INTEGRAL END BENT DETAILS
(Beams Attached Directly to Piling, Method A)
Figure 67-1B
(Continued)

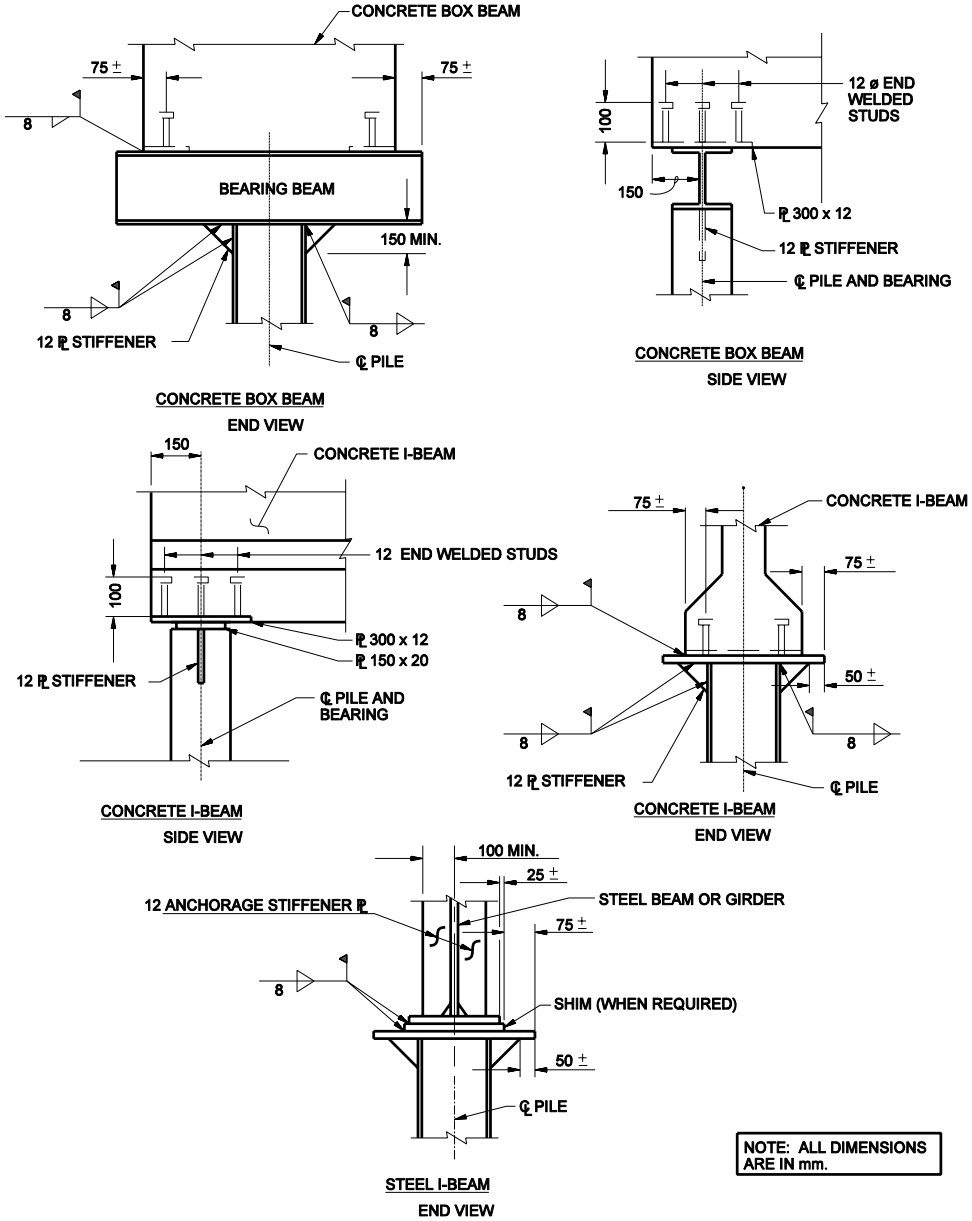

SUGGESTED INTEGRAL END BENT DETAILS
(Beams Attached Directly to Piling, Method A)
Figure 67-1B
(Continued)