TRANSVERSE TENSIONING RODS: AFTER THE BEAMS ARE IN PLACE, PERFORM A PRELIMINARY TIGHTENING TO THE TRANSVERSE TENSIONING RODS. PERFORM FINAL TENSIONING THAT YIELDS 138 MPa AS DEVELOPED BY A TORQUE OF 271 N m. PROVIDE TRANSVERSE TENSIONING RODS AND PLATES CONFORMING TO ASTM A709M GRADE 250 WITH HEAVY HEX NUTS CONFORMING TO ASTIM A307.

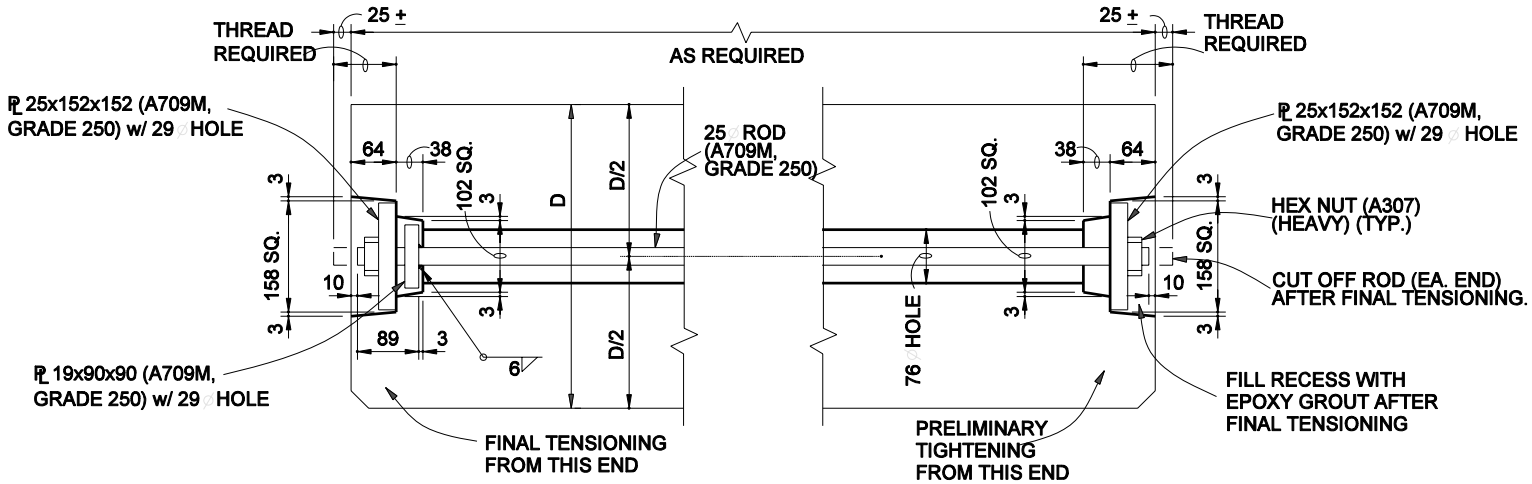

NOTE:
FINAL TENSIONING SHALL YIELD 138 MPa AS DEVELOPED BY A TORQUE OF 271 N m.

SECTION SHOWING TRANSVERSE TENSIONING ROD

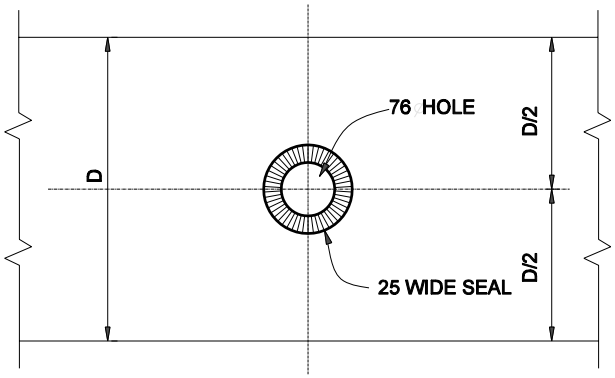

NOTE:
SEAL TO BE PLACED ON EACH FACE ON BEAM AT HOLE LOCATION

SECTION AT FACE OF BEAM

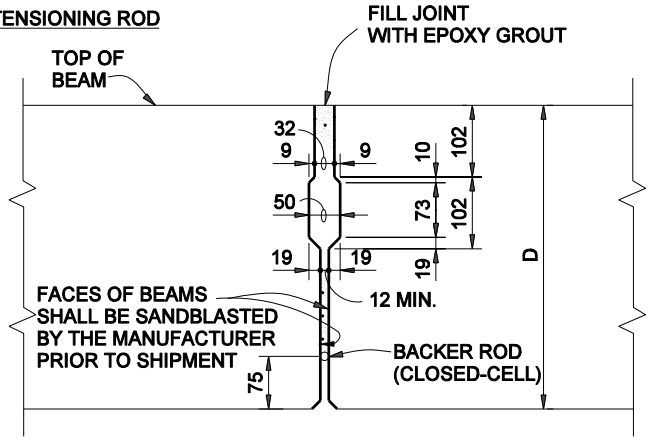

SECTION SHOWING JOINT BETWEEN BEAMS

ADJACENT BOX BEAM DETAILS
Figure 63-8C