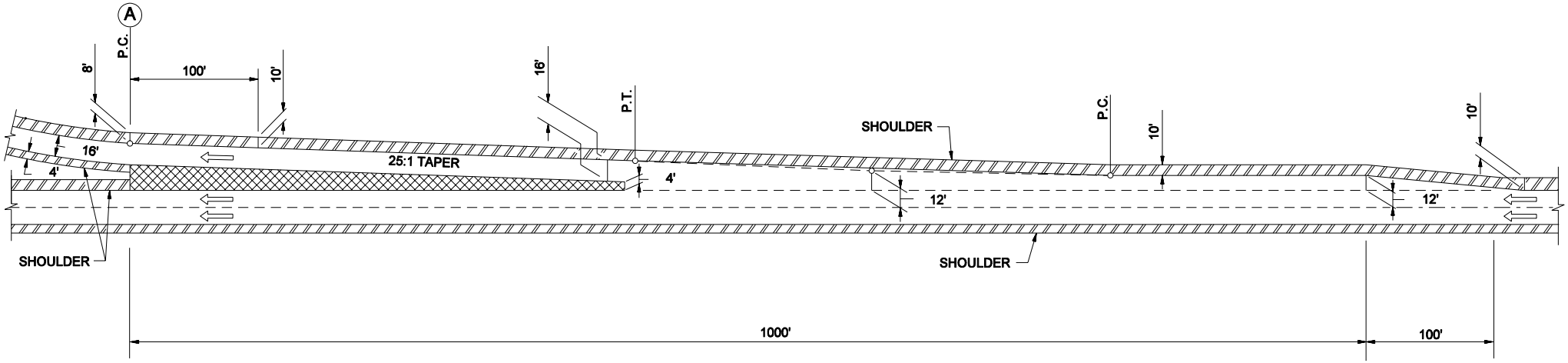

PARALLEL DESIGN (PREFERRED)

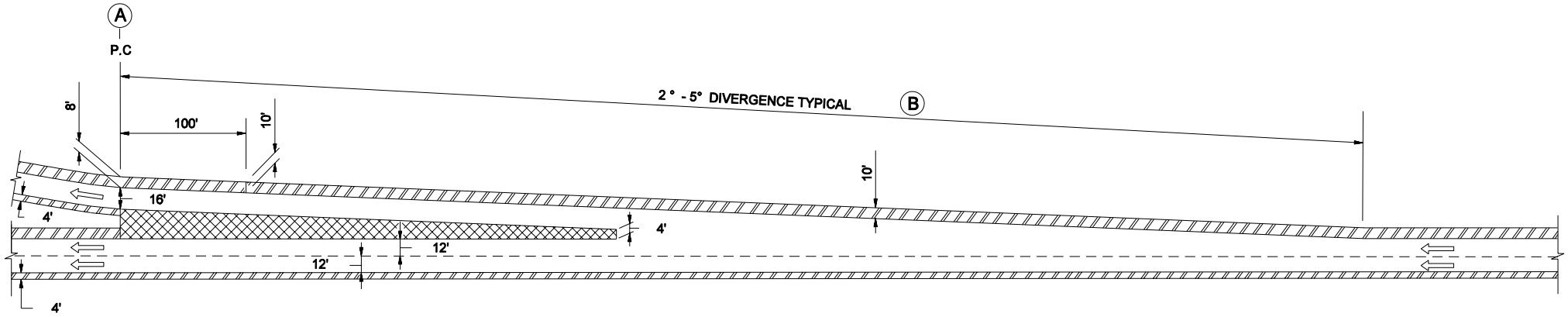

TAPERED DESIGN

A Point controlling safe speed at ramp.

B See AASHTO A Policy on Geometric Design of Highways and Streets for applicable deceleration distances.

TYPICAL EXIT RAMP TYPES
(Single Lane)

Figure 48-4A