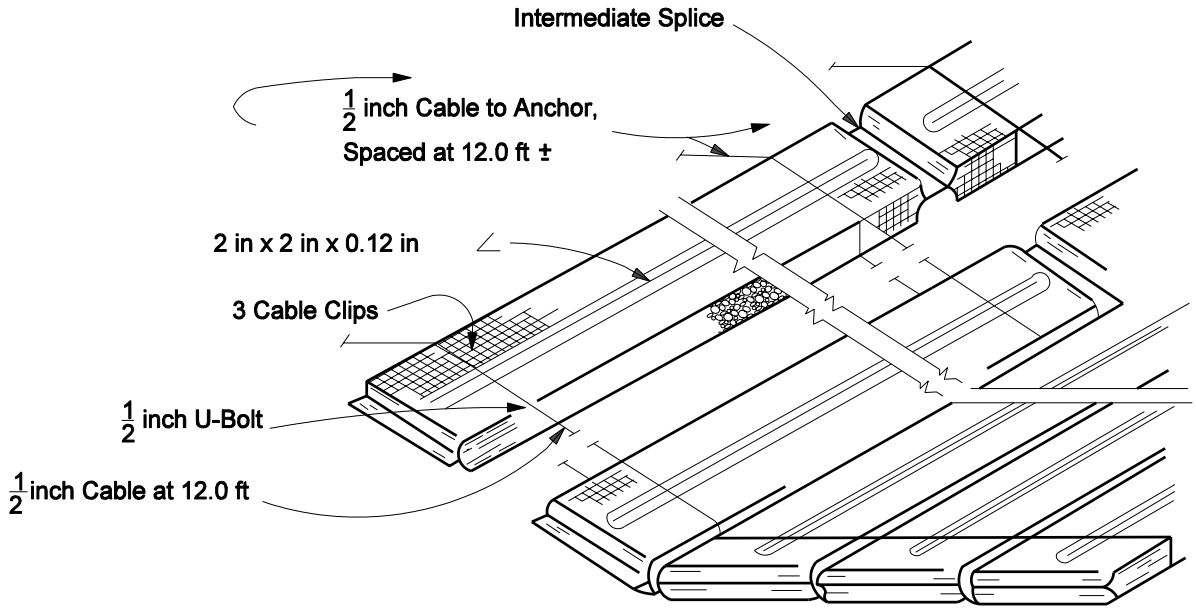

Mattress Layout

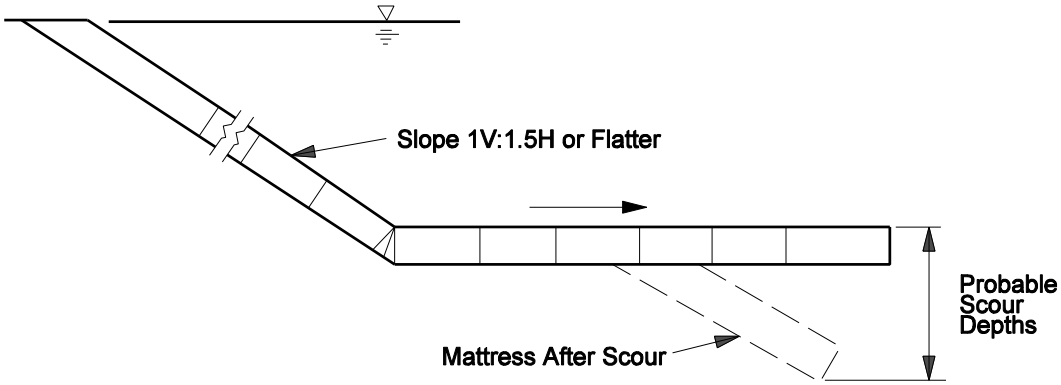

Section

TYPICAL DETAIL OF ROCK AND WIRE MATTRESS
(Constructed from Available Wire Fencing Materials)

Figure 38-6Z