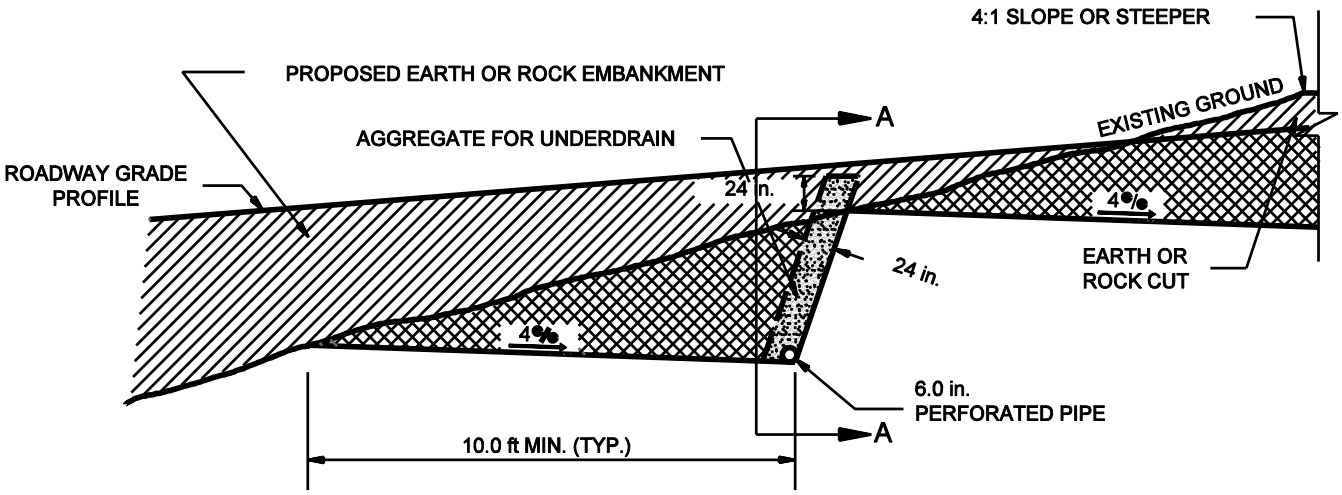

LEGEND

EARTH OR ROCK EMBANKMENT

EARTH AND/OR ROCK EXCAVATION

NOTE: BENCHING IS REQUIRED WHERE THE EXISTING GROUND IS STEEPER THAN 4:1 SLOPE.

PROFILE VIEW

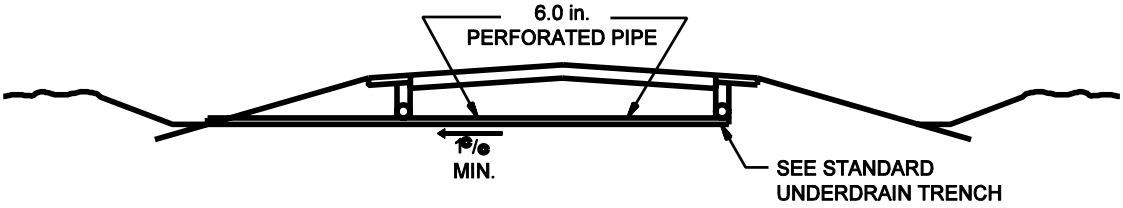

SECTION A-A

TYPICAL TRANSVERSE INCEPTOR DRAINAGE

Figure 18-2I