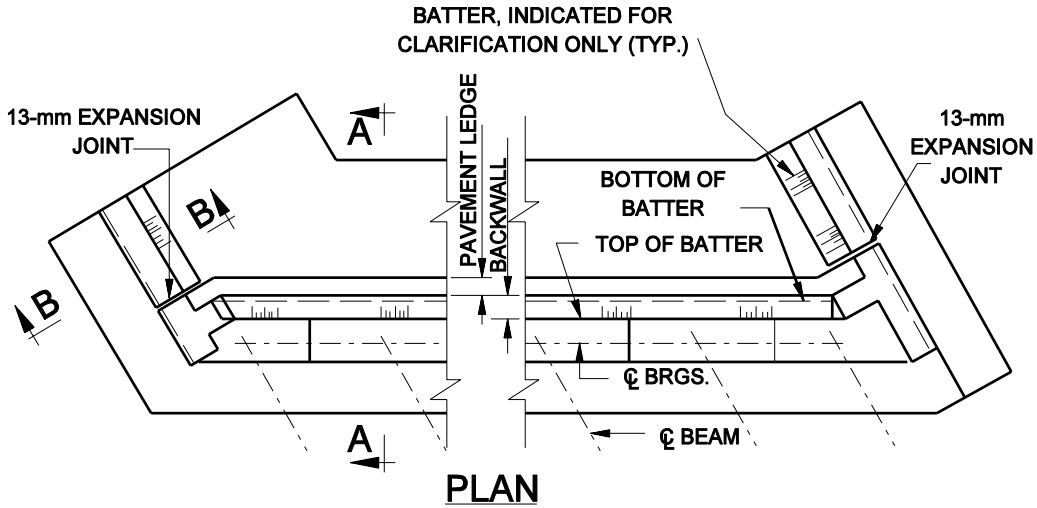

PLAN

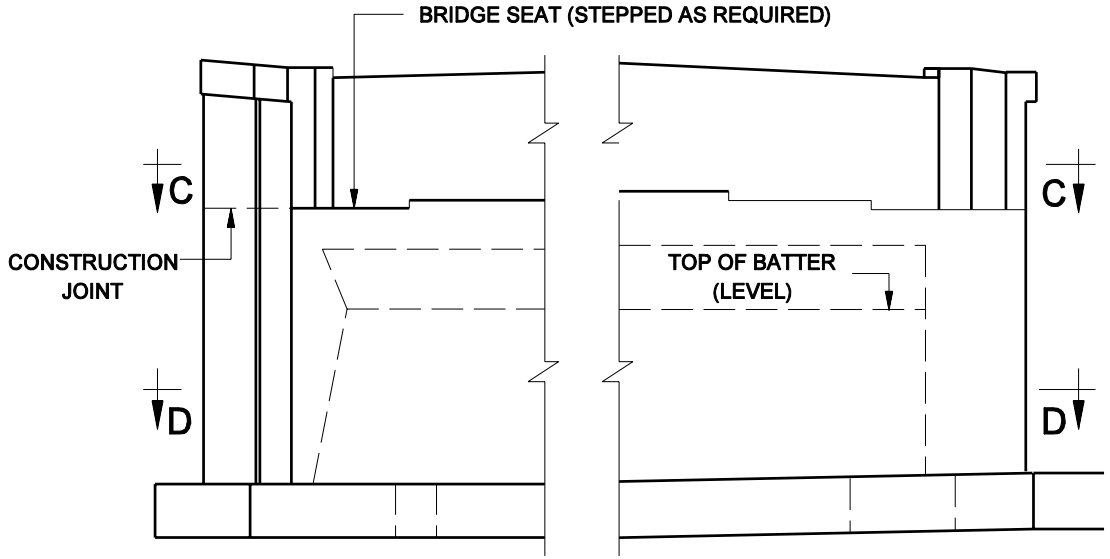

ELEVATION

TYPICAL ABUTMENT DETAILS
Figure 67-2D

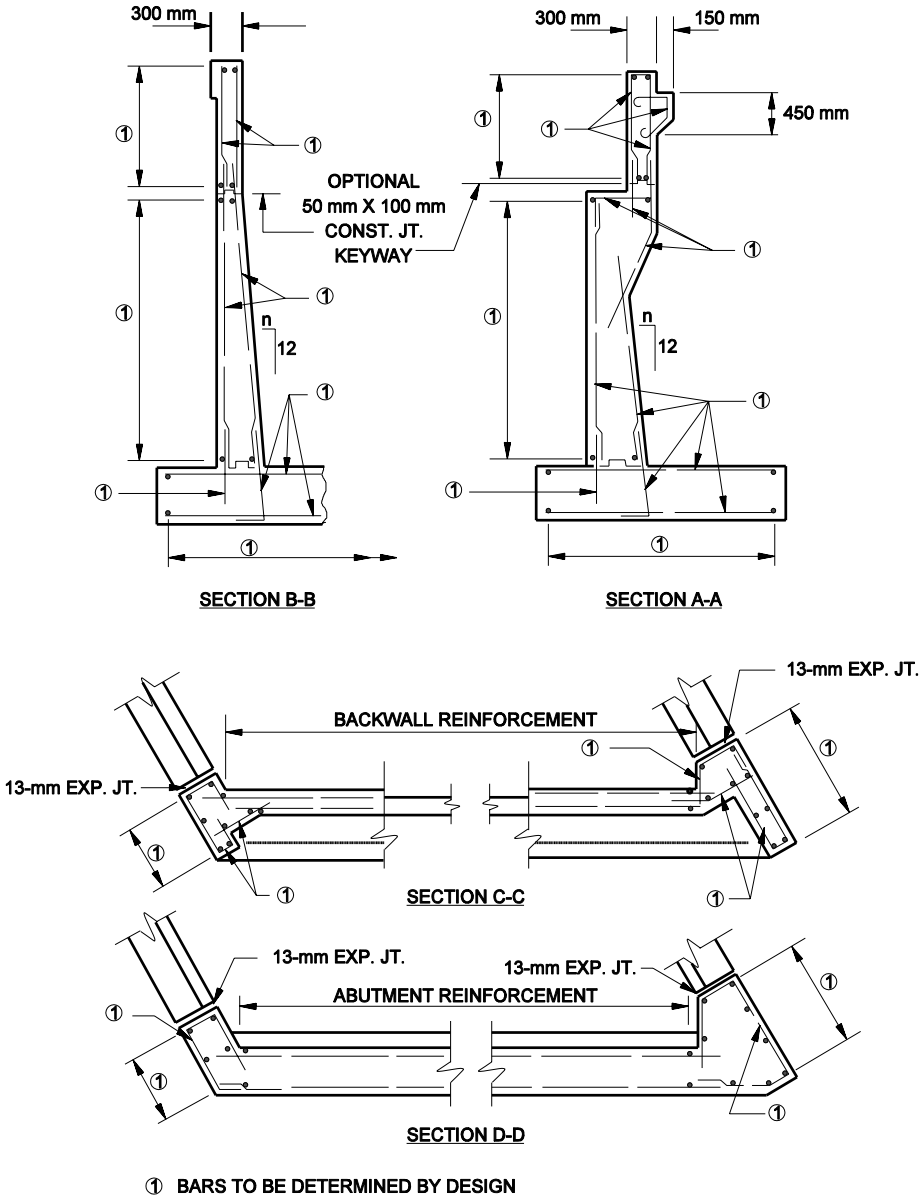

① BARS TO BE DETERMINED BY DESIGN

TYPICAL ABUTMENT DETAILS
Figure 67-2D
(Continued)