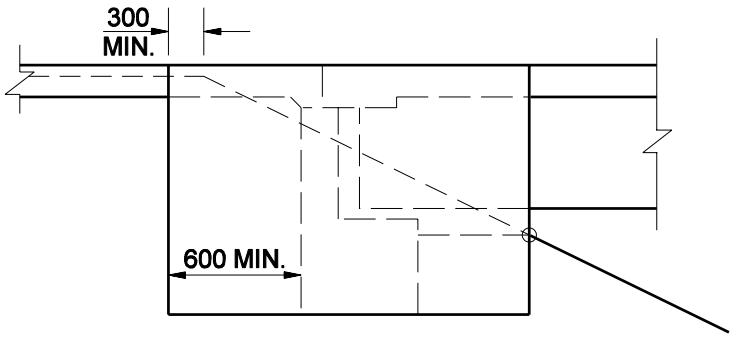

DECK WITHOUT EXP. JOINT
NON-INTEGRAL END BENT

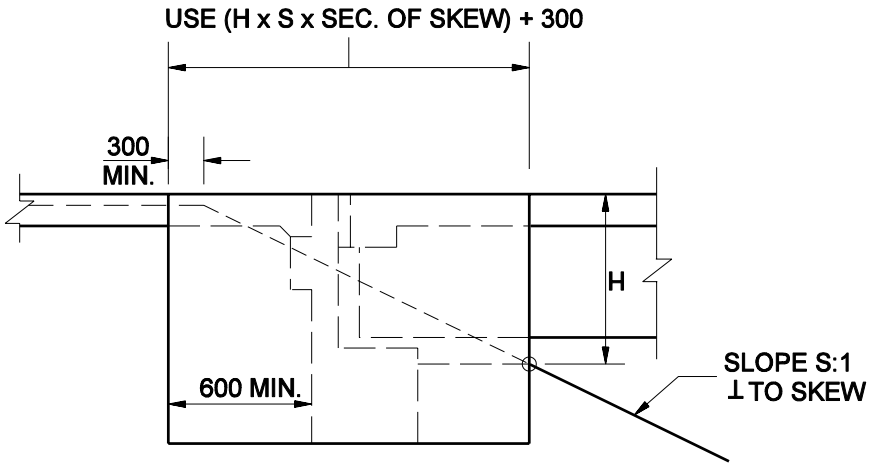

DECK WITH EXP. JOINT
NON-INTEGRAL END BENT
DEEP BEAM

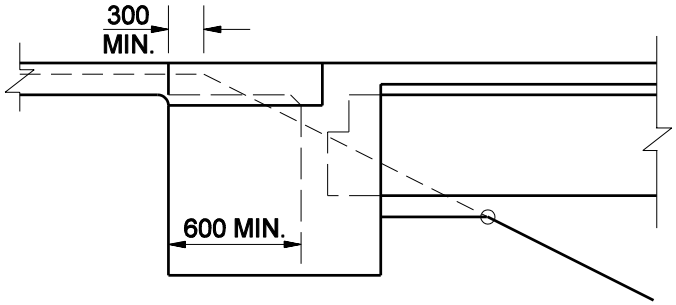

DECK WITHOUT EXP. JOINT
INTEGRAL END BENT

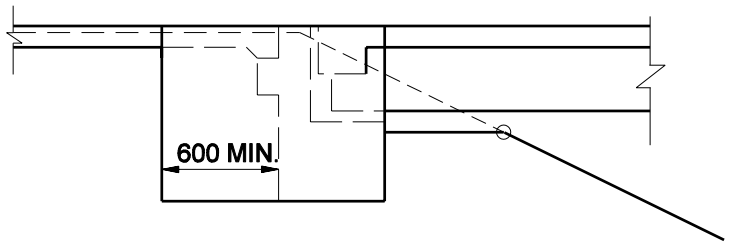

DECK WITH EXP. JOINT
NON-INTEGRAL END BENT
SHALLOW BEAM

NOTE: ALL DIMENSIONS
ARE IN mm.

TYPICAL WINGWALL DETAILS
Figure 67-1H