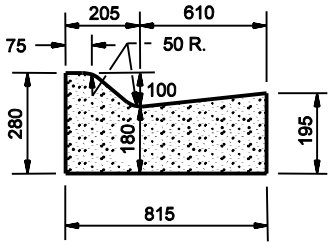

COMBINED CONCRETE CURB
AND GUTTER, TYPE B
(SLOPING)

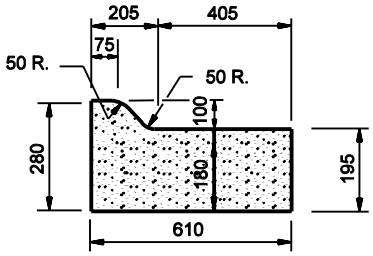

MODIFIED COMBINED CONCRETE
CURB AND GUTTER, TYPE B
(SLOPING)

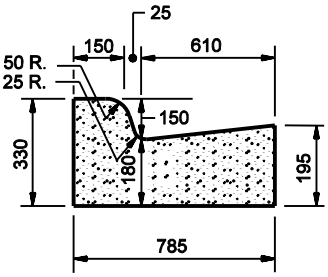

COMBINED CONCRETE
CURB AND GUTTER
(VERTICAL)

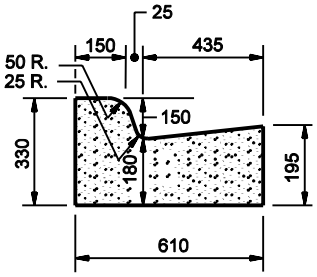

MODIFIED COMBINED CONCRETE
CURB AND GUTTER
(VERTICAL)

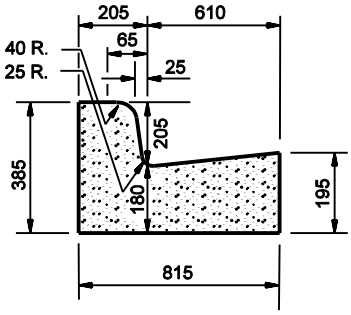

COMBINED CONCRETE CURB
AND GUTTER, TYPE C
(VERTICAL)

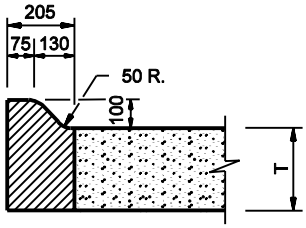

INTEGRAL CONCRETE CURB
TYPE B
(SLOPING)

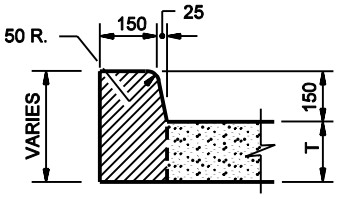

INTEGRAL CONCRETE CURB
(VERTICAL)

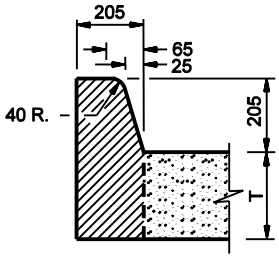

INTEGRAL CONCRETE CURB
TYPE C
(VERTICAL)

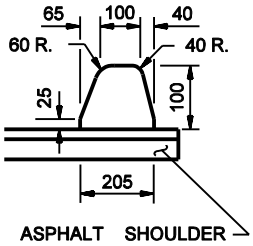

ASPHALT CURB
(SLOPING)

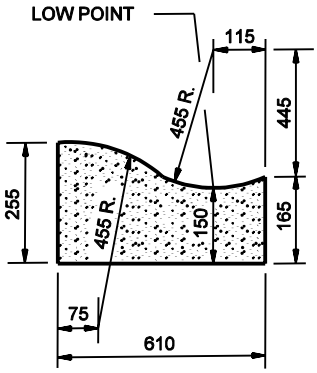

ROLLED CURB
(SLOPING)

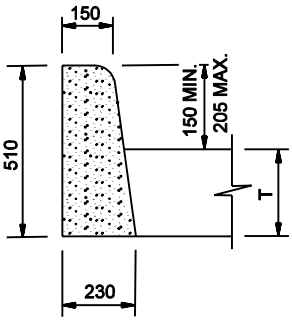

CONCRETE CURB
(VERTICAL)

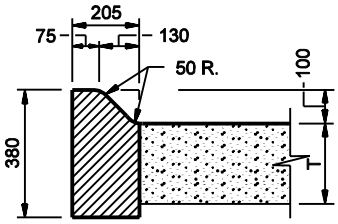

CONCRETE CURB
TYPE B
(SLOPING)

NOTE: ALL DIMENSIONS ARE IN mm.

CURBING TYPES

Figure 45-1D