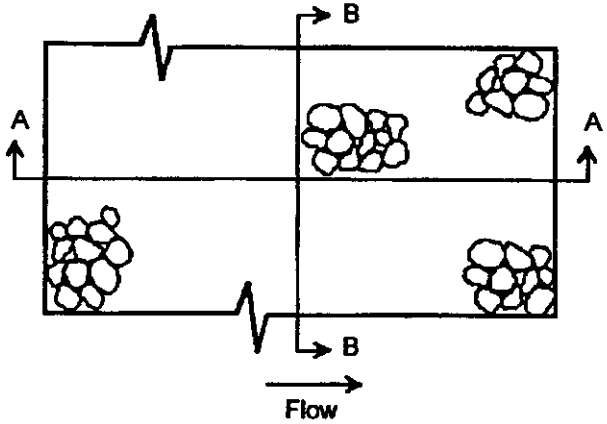

(a) Plan

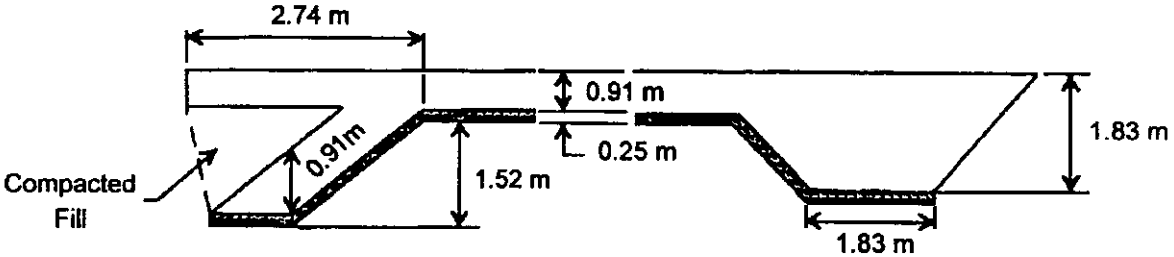

(b) Section A-A

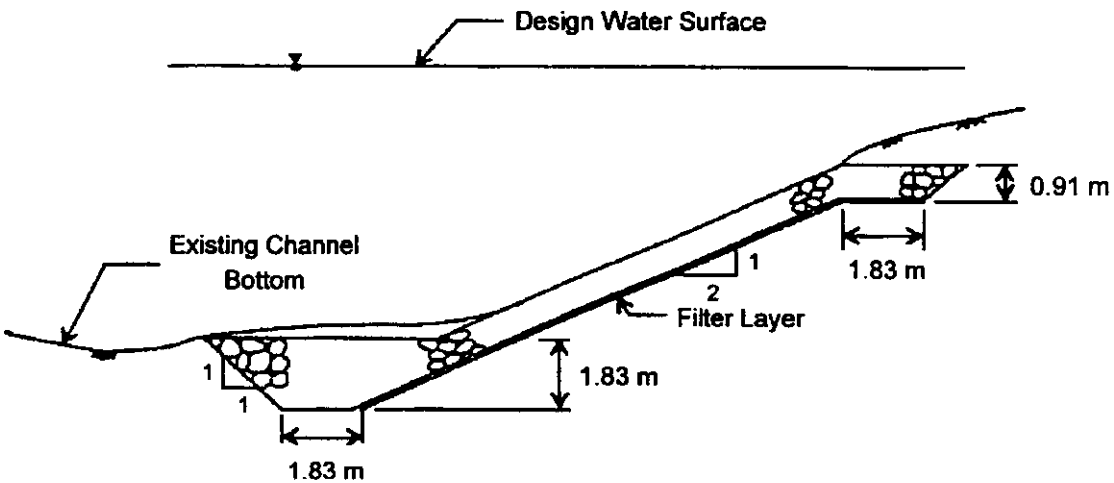

(c) Section B-B

TOE AND FLANK DETAILS
(Example 2)

Figure 38-6W