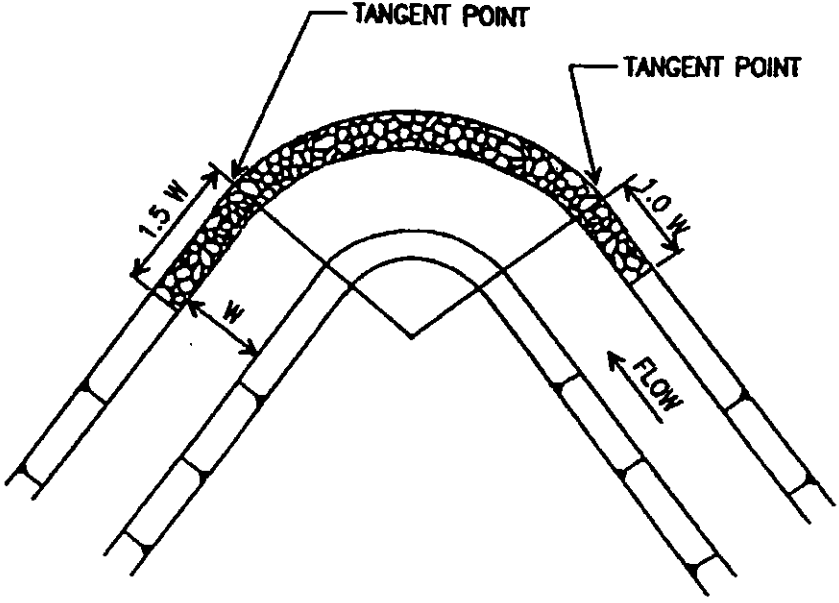

LONGITUDINAL EXTENT OF REVETMENT PROTECTION

Figure 38-5A